GEARBOXES

Fenner Gearboxes Technical Data

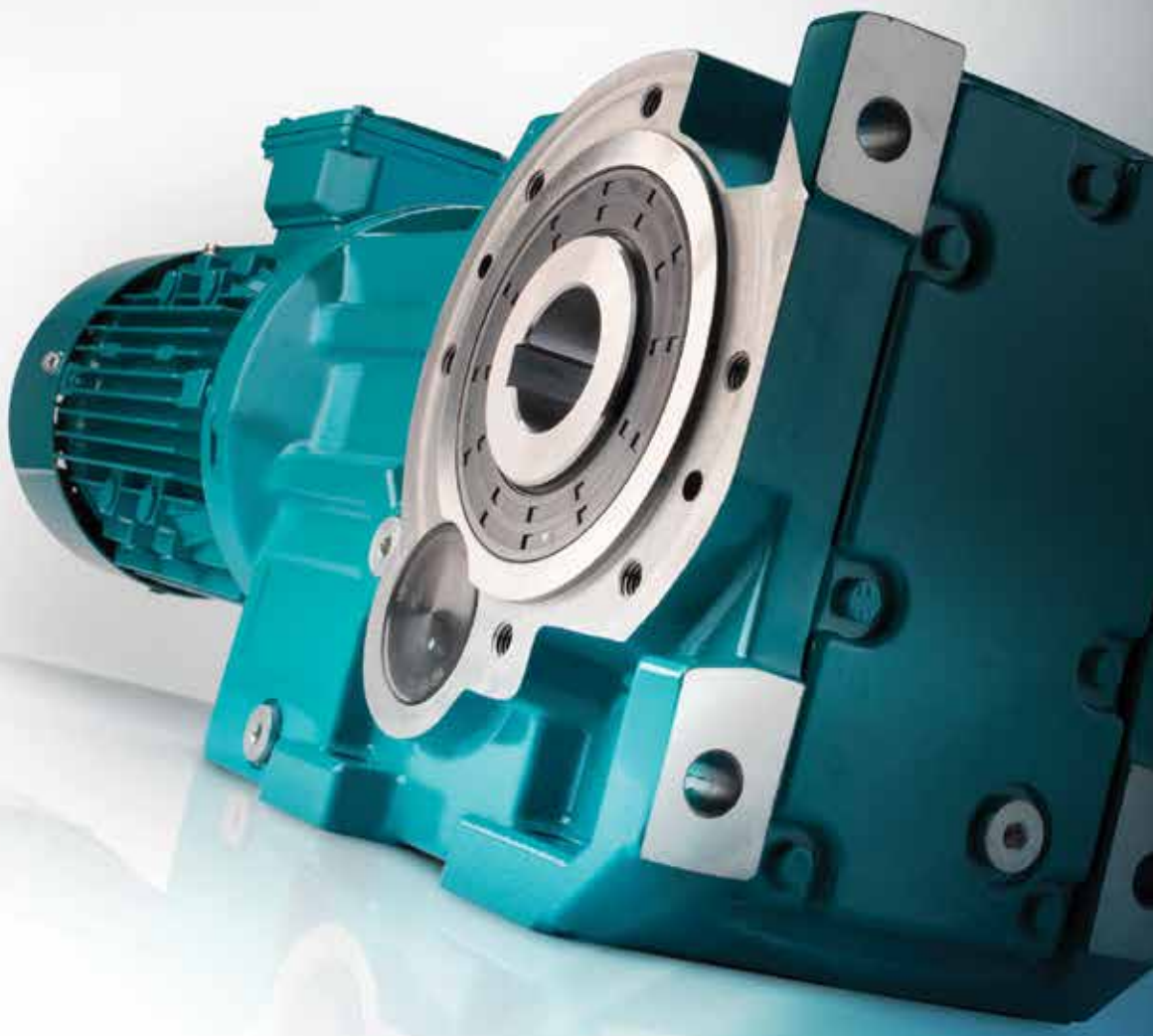

Fenner®

Reliable | Trusted | Connected

One Range, One Result ...

driven performance

The complete drive solution from initial electrical input through to the final driven machine in one range.

Fenner® power transmission products are world renowned for delivering the ultimate combination of rugged construction, reliable & efficient performance and value for money

- *proven in the harshest environments, guaranteed to perform in yours!*

All Fenner® power transmission products are manufactured to exacting specifications in line with UK and International standards, and are backed up by a product development programme designed to keep them at the cutting edge.

Fenner®

Reliable | Trusted | Connected

Section 9:

Gearboxes - Series M

The innovative Fenner® Series M coaxial gearbox combines high load carrying capacity with high efficiency and reliability suitable for a wide variety of applications.

- Drives up to 90kW
- Dimensionally interchangeable with the market leaders
- High ratio combinations available in multi-stage units
- Oil tight gearhead enables motor removal without oil spillage
- Accepts standard IEC motors
- ATEX Certification available

Geared Drives: Design Data Required	
Motorised (with integral motor) or non-motorised?	> If motorised: electrical supply available any special motor features required (brake, thermistors, flameproof etc.) > If non-motorised: type of prime mover rotational speed of prime mover power rating of prime mover is an input shaft coupling required? if so, prime mover shaft dia.
Foot mounted or flange mounted?	> If flange mounted, flange diameter required > if foot mounted, is an output shaft coupling required?
Type of driven machine	
Rotational speed of driven machine	> Constant or variable over what range?
Power absorbed by driven machine (or required output torque)	
Hours/day duty & start/stop frequency	

Series M	Page
Motorised Selection	181
Motorised Dimensions	199
Non Motorised Selection	203
Non Motorised Dimensions	210
Exact Ratios	214
B14 Face Mounting Dimensions	215
Overhung Load Capacities	216
Installation & Maintenance	217
Ordering Instructions	218

Visit www.fptgroup.com

SERIES M

Flexible and Efficient

The Cost Effective Alternative

- Dimesionally interchangeable with market leaders
- Versatile mounting
- Modular design backstops easily fitted
- Oil tight gearhead enables motor removal without oil spillage
- Accepts standard IEC motors
- Ratios from 1.5:1 to 11,000:1

Fenner®

THE MARK OF ENGINEERING EXCELLENCE

www.fptgroup.com

Series M Gearboxes : Motorised section

MOTORISED UNITS SELECTION PROCEDURE

(a) Service Factor
From Table 1 select the Mechanical Service Factor (Fm) applicable to the drive. If the unit is to be subjected to frequent stop/starts in excess of 10 times per day then multiply factor Fm by Factor Fs from table 2.

(b) Motor Power
Refer to the selection tables on pages 182 to 198 and choose a motor power equal to or in excess of that required, if the motor power is not known then from the formula below determine the power requirements of the driven machine and select a motor power in excess of the calculated machine absorbed power.

$$P_2 = \frac{M_2 \times n_2}{9550}$$

P_2 = Machine absorbed power (kW)
M_2 = Machine absorbed torque (Nm)
n_2 = Machine speed (Rev/Min)

(c) Unit Selection
Refer to the selection tables on pages 182 to 198 and choose a motor power equal to or closest above that calculated in step (b). Then read down the column headed "Nominal Output" until a speed equal to or near to the required speed is found. On this line read across to the service factor column and check that the service factor exceeds the value from step (a). If the service factor is either lower or much higher than that required check the speeds at each side of the required speed to see if a more suitable unit and service factor can be found.

(d) Overhung and Thrust Loading
If an indirect drive is used between the gearmotor and the driven machine, then the overhung load should be calculated using one of the formula on page 216. This value should be compared with the maximum allowable value given in column 5 of the selection tables. If the value exceeds the maximum allowed, then either re-design the indirect drive or select a larger unit capable of supporting the overhung load.

EXAMPLE 1
A Series M foot mounted gearmotor is required to drive a uniformly loaded mixer using a 4 kW electric motor at 88 rev/min. The mixer operates 8 hours a day and stops and starts every hour

A coupling is to be used to connect the gearmotor to the mixer.

(a) Service Factor
From table 1 below the service factor for a Uniformly Loaded Mixer is 1.0. The mixer stops and starts every hour therefore the stop/start factor is 1.0

(b) Motor Power
Series M gearmotor units fitted with 4 kW motors are described on page 191.

(c) Unit Selection
Reading down the column headed "Nominal Output", it is found that there are two unit selections at 88 rev/min, at the first one of these read across to the maximum service factor column, it can be seen that the unit size 862A2046 has a service factor of 1.07. This exceeds the 1.00 service factor required and therefore is suitable for the application. The fourth digit (letter A) signifies a foot mounted unit, therefore the code is correct for the unit required. If another mounting style is required a different letter is used in place of the A, for details see page 218.

TABLE 1 – SERVICE FACTORS (Fm)

Types of Driven Machine	Operational Hours		
	Under 3	3 to 10	Over 10
Light Duty Agitators (uniform density), Belt conveyors (uniformly loaded).	1.0	1.1	1.2
Medium Duty Agitators and mixers (variable density). Belt conveyors (not uniformly loaded), Kilns, Laundry machinery, Lineshafts, Machine tools, Printing machinery, Sawmill and woodworking machinery, Screens (rotary).	1.1	1.2	1.3
Heavy Duty Brick machinery, Bucket elevators, Conveyors (heavy duty), Hoists, Quarry plant, Rubber machinery, Screens (vibrating), Textile machinery.	1.3	1.4	1.5

TABLE 2 - STARTING SERVICE FACTOR (Fs)

	Start/stops per hour					
	Up to 1	5	10	40	60	>200
Factor Fs	1.00	1.03	1.06	1.10	1.15	1.20

For ATEX certified gear units please consult your local Authorised Distributor.

(d) Overhung and Thrust Loading
As no external loads are present, no further checks are necessary.

EXAMPLE 2
A non-uniformly loaded conveyor absorbs 1600 Nm at the head shaft which has to rotate at 52 rev/min. A 2:1 chain-drive utilising a triplex chain drive with 19T + 38T sprockets connects the head shaft drum to a foot mounted gearmotor.

The conveyor stops and starts 4 times a day. Select a suitable size Series M gearmotor for over 16 hours a day operation.

(a) Service Factor
From table 1 below the Service Factor is 1.50 From table 2 the starting factor is 1.00.

(b) Motor Power
As the motor power is not known, it is necessary to calculate the power requirements of the driven machine with the following formula:

$$\text{Machined absorbed power} = \frac{1600 \times 52}{9550} = 8.71 \text{ kW}$$

The nearest motor is an 11.0kW motor and is found on page 194.

(c) Unit Selection
Reading down the column headed "Nominal Output" it is found that 100 rev/min is nearest to the required output speed of 104 rev/min and by referring to the column headed 'Service Factor' the only gearmotor selection at this speed has a service factor of 2.46 which is more than adequate for the application. The code for this selection is seen to be 865A1966. As the service factors for the two units at speeds above and below 100 rev/min are inadequate for the application the 865A1966 is selected.

(d) Overhung and Thrust Loading
As the 19-T sprocket will impose a radial load on the gearmotor output shaft, it is necessary to calculate its value by using the formula below. See page 216 for further explanation.

$$\text{Overhung load} = \frac{\text{Torque} \times 1000 \times K}{r} = \frac{800 \times 1000 \times 1.0}{77.16} = 10368 \text{ N.}$$

The maximum overhung load value for 865A1966 unit selected is 21675N which exceeds the value calculated above and is therefore suitable for the application.

Series M Gearboxes : Motorised selection

Bold print indicates a 6 pole motor is used

Double reduction (see pages 199-200 for dimensions)
Triple reduction (see pages 199-200 for dimensions)
Quadruple reduction (see pages 201-202 for dimensions)

0.12 KW MOTOR

Nominal Output Rev/Min	Output Torque Nm	Service Factor	Unit Selection	Overhung Load N
368	3	19.75	860A0948	1690
273	4.1	16.58	860A1048	1790
242	4.6	14.85	**860A0913**	1810
240	4.6	15.47	860A1148	1840
212	5.3	14.28	860A1248	1880
179	6.2	12.18	**860A1013**	1900
166	6.7	11.82	860A1448	1900
158	7	11.08	**860A1113**	1900
154	7.2	11.11	860A1548	1900
139	8	9.98	**860A1213**	1900
122	9.1	9.20	860A1748	1900
109	10	8.33	**860A1413**	1900
108	10	8.41	860A1848	1900
101	11	7.86	**860A1513**	1900
93.8	12	7.62	860A1948	1900
84.4	13	6.83	860A2048	1900
79.7	14	6.45	**860A1713**	1900
76.5	15	6.19	860A2148	1900
70.3	16	5.66	**860A1813**	1900
69.5	16	5.64	860A2248	1900
61.6	18	4.95	**860A1913**	1900
59.4	19	4.84	860A2348	1900
55.3	20	4.48	**860A2013**	1900
50.2	22	4.09	**860A2113**	1900
49.5	22	4.05	860A2548	1900
45.6	24	3.70	**860A2213**	1900
42.5	26	3.49	860A2648	1900
38.9	29	3.15	**860A2313**	1900
38.2	29	3.10	860A2748	1900
32.5	34	2.68	**860A2513**	1900
31.7	35	2.38	860A2948	1900
27.9	40	2.28	**860A2613**	1900
27.7	39	1.83	860A3048	1900
25.8	43	3.73	801A3148	4000
25.1	44	2.05	**860A2713**	1900
24.4	45	1.59	860A3148	1900
24.2	45	3.57	801A4448	4000
23.7	45	1.99	860A4448	1900
22.0	49	3.26	801A4548	4000
21.9	51	3.15	**801A2913**	4000
21.5	52	1.75	860A4548	1900
20.8	53	1.58	**860A2913**	1900
20.0	55	2.94	801A4648	4000
20.0	55	3.81	861A4648	4000
19.5	57	1.59	860A4648	1900
19.3	58	2.75	**801A3013**	4000
18.2	61	1.18	**860A3013**	1900
17.1	65	2.46	801A4748	4000
17.1	64	3.26	861A4748	4000
17.0	66	2.44	**801A3113**	4000
16.7	67	1.35	860A4748	1900
16.0	70	1.03	**860A3113**	1900
15.9	68	2.36	**801A4413**	4000
15.5	72	1.26	**860A4413**	1900
14.4	75	2.13	**801A4513**	4000
14.2	78	2.07	801A4948	4000
14.2	78	2.70	861A4948	4000
14.1	76	1.18	**860A4513**	1900
13.9	78	1.15	860A4948	1830
13.1	85	1.89	**801A4613**	4000
13.1	83	2.52	**861A4613**	4000
12.8	88	1.03	**860A4613**	1900
12.2	88	1.83	801A5048	4000
12.2	91	2.30	861A5048	4000
12.0	91	3.73	802A5048	7200
11.9	95	0.96	860A5048	1650
11.2	97	1.65	**801A4713**	4000
11.2	99	2.13	**861A4713**	4000
11.0	101	1.59	801A5148	4000
11.0	98	2.15	861A5148	4000
10.9	95	0.95	**860A4713**	1360
10.7	103	0.88	860A5148	1360
10.6	104	3.26	802A5148	7200
9.31	120	1.34	**801A4913**	4000
9.31	116	1.81	**861A4913**	4000
9.10	119	1.35	801A5348	4000
9.10	120	1.75	861A5348	4000
9.10	118	2.86	802A5348	7200
9.10	121	3.73	862A5348	7200
8.02	137	2.46	802A5448	7200
8.02	135	3.34	862A5448	7200
7.99	136	1.18	**801A5013**	4000
7.99	140	1.50	**861A5013**	4000
7.94	134	1.19	801A5448	4000
7.94	139	1.51	861A5448	4000
7.82	139	2.44	**802A5013**	7200
7.19	145	1.10	**801A5113**	4000
7.19	148	1.42	**861A5113**	4000
7.05	152	2.23	802A5548	7200
7.05	153	2.94	862A5548	7200
6.99	155	1.04	801A5548	4000
6.99	155	1.35	861A5548	4000
6.94	159	2.13	**802A5113**	7200
6.48	168	3.73	803A5548	7200
5.97	185	0.87	**801A5313**	3200
5.97	177	1.18	**861A5313**	3500
5.97	187	1.81	**802A5313**	7200
5.97	185	2.44	**862A5313**	7200
5.88	185	1.14	861A6048	3026
5.28	207	1.02	861A6148	3026
5.26	205	1.65	**802A5413**	7200
5.26	205	2.20	**862A5413**	7200
5.21	205	1.03	**861A5413**	3000
4.80	226	0.93	861A6248	3026
4.63	239	1.42	**802A5513**	7200
4.63	239	1.89	**862A5513**	7200
4.58	242	0.87	**861A5513**	2400
4.35	250	0.85	861A6348	3026
4.25	257	2.44	**803A5513**	7200

0.18 KW MOTOR

Nominal Output Rev/Min	Output Torque Nm	Service Factor	Unit Selection	Overhung Load N
368	4.5	13.17	860A0902	1681
273	6.2	11.06	860A1002	1778
240	6.9	10.32	860A1102	1826
238	7	9.74	**860A0905**	1791
212	7.9	9.52	860A1202	1856
176	9.5	7.99	**860A1005**	1874
166	10	7.88	860A1402	1873
155	11	7.27	**860A1105**	1874
154	11	7.41	860A1502	1872
137	12	6.55	**860A1205**	1874
122	14	6.14	860A1702	1874
108	16	5.61	860A1802	1874
107	16	5.46	**860A1405**	1874
99.0	17	5.16	**860A1505**	1868
93.8	18	5.08	860A1902	1854
84.4	20	4.55	860A2002	1890
78.4	21	4.23	**860A1705**	1822
76.5	22	4.13	860A2102	1877
69.5	24	3.76	860A2202	1852
69.2	24	3.71	**860A1805**	1792
60.5	28	3.25	**860A1905**	1783
59.4	28	3.23	860A2302	1881
54.4	31	2.94	**860A2005**	1786
49.5	33	2.70	860A2502	1819
49.4	34	2.68	**860A2105**	1750
44.9	37	2.43	**860A2205**	1719
42.5	39	2.33	860A2602	1878
38.7	43	3.76	801A2702	4000
38.3	44	2.07	**860A2305**	1712
38.2	44	2.07	860A2702	1854
33.8	49	3.25	**801A2505**	4000
33.3	50	3.23	801A2902	4000
33.3	50	3.97	861A2902	4000
31.9	51	1.76	**860A2505**	1634
31.7	53	1.59	860A2902	1890
29.4	56	2.86	801A3002	4000
29.4	56	3.60	861A3002	4000
28.1	59	2.73	**801A2605**	4000
28.1	59	3.56	**861A2605**	4000
27.7	59	1.22	860A3002	1849
27.4	60	1.50	**860A2605**	1631
25.8	64	2.49	801A3102	3956
25.8	64	3.23	861A3102	4000
25.0	66	2.43	**801A2705**	4000
25.0	67	3.15	**861A2705**	4000
24.7	67	1.34	**860A2705**	1540
24.4	67	1.06	860A3102	1900
24.2	67	2.38	801A4402	4000
24.2	68	3.07	861A4402	4000
23.7	68	1.33	860A4402	1724
22.0	74	2.17	801A4502	4000
22.0	75	2.81	861A4502	4000
21.5	77	1.17	860A4502	1590
21.5	78	2.07	**801A2905**	3824
21.5	77	2.68	**861A2905**	4000
20.5	82	1.04	**860A2905**	1496
20.0	82	1.96	801A4602	4000
20.0	82	2.54	861A4602	3743
19.5	85	1.06	860A4602	1780
18.9	89	1.81	**801A3005**	3706
18.9	88	2.37	**861A3005**	4000
18.7	88	3.86	802A4602	7200
17.2	95	3.55	802A4702	7200
17.1	98	1.64	801A4702	3913
17.1	96	2.17	861A4702	3913
16.7	100	0.90	860A4702	1450
16.7	100	1.60	**801A3105**	3571
16.7	100	2.07	**861A3105**	4000
15.7	104	1.55	**801A4405**	3829
15.7	104	2.01	**861A4405**	4000
15.3	109	0.83	**860A4405**	730
15.3	108	3.15	**802A4405**	7200
14.3	114	2.97	802A4902	7200
14.3	115	3.92	862A4902	7200
14.2	116	1.38	801A4902	4000
14.2	115	1.40	**801A4505**	3685
14.2	116	1.80	861A4902	3654
14.2	116	1.81	**861A4505**	4000
13.9	119	2.84	**802A4505**	7200
12.9	129	1.24	**801A4605**	3532
12.9	127	1.65	**861A4605**	3441
12.2	132	1.22	801A5002	3976
12.2	136	1.54	861A5002	3976
12.1	137	2.48	**802A4605**	7200
12.1	137	3.30	**862A4605**	7200
12.0	136	2.49	802A5002	7102
12.0	137	3.28	862A5002	7200
11.1	149	2.27	**802A4705**	7200
11.1	148	3.04	**862A4705**	7200
11.0	151	1.06	801A5102	4000
11.0	148	1.09	**801A4705**	3243
11.0	150	1.40	**861A4705**	3243
11.0	146	1.43	861A5102	3718
10.6	156	2.17	802A5102	7200
10.6	155	2.91	862A5102	7200
9.23	177	1.91	**802A4905**	7200
9.23	178	2.53	**862A4905**	7200
9.16	183	0.88	**801A4905**	3270
9.16	176	1.19	**861A4905**	3039
9.10	178	0.90	801A5302	4000
9.10	180	1.17	861A5302	3173
9.10	178	1.91	802A5302	7178
9.10	181	2.49	862A5302	6660
8.55	191	3.28	803A5302	7200
8.02	206	1.64	802A5402	7034
8.02	203	2.23	862A5402	6902
7.94	208	1.01	861A5402	3420
7.86	214	0.98	**861A5005**	2493
7.69	212	1.60	**802A5005**	6442
7.69	213	2.12	**862A5005**	7200
7.45	221	2.84	**803A5005**	7200
7.35	223	2.81	803A5402	7200
7.07	225	0.93	**861A5105**	1766

Series M Gearboxes : Motorised selection

Nominal Output Rev/Min	Output Torque Nm	Service Factor	Unit Selection	Overhung Load N
7.35	223	2.81	803A5402	7200
7.07	225	0.93	**861A5105**	1766
7.05	228	1.49	802A5502	7200
7.05	230	1.96	862A5502	6628
6.99	233	0.90	861A5502	2660
6.82	243	1.40	**802A5105**	6712
6.82	243	1.86	**862A5105**	7200
6.48	252	2.49	803A5502	7200
6.42	255	2.44	803A6002	7200
6.21	264	2.37	**803A5105**	7200
6.03	271	3.20	863A6002	4677
5.93	276	1.24	802A6002	7125
5.93	275	1.64	862A6002	4809
5.87	285	1.19	**802A5305**	6295
5.87	282	1.60	**862A5305**	6195
5.83	280	2.22	803A6102	7200
5.51	296	2.12	**803A5305**	7200
5.32	307	2.82	863A6102	4676
5.30	308	1.11	802A6102	7125
5.30	308	1.46	862A6102	4809
5.17	313	1.09	**802A5405**	5901
5.17	312	1.45	**862A5405**	5820
5.06	323	1.92	803A6202	7200
4.98	328	1.04	802A6202	7125
4.98	329	1.37	862A6202	4809
4.82	339	2.56	863A6202	4676
4.74	347	1.81	**803A5405**	7200
4.55	365	0.93	**802A5505**	6203
4.55	364	1.24	**862A5505**	5274
4.52	361	0.95	802A6302	7125
4.52	362	1.25	862A6302	4809
4.40	371	1.68	803A6302	7200
4.38	374	2.32	863A6302	4676
4.18	392	1.60	**803A5505**	6215
4.14	395	1.57	**803A6005**	7200
3.89	420	2.07	**863A6005**	4677
3.83	426	0.80	**802A6005**	7125
3.83	426	1.06	**862A6005**	4809
3.83	427	2.03	863A6402	4675
3.81	429	0.80	802A6402	7125
3.81	428	1.06	862A6402	4809
3.78	433	1.44	803A6402	7200
3.76	435	1.43	**803A6105**	7200
3.48	469	1.33	803A6502	7200
3.43	480	1.81	**863A6105**	4676
3.42	477	0.95	**862A6105**	4809
3.33	491	1.77	863A6502	4675
3.32	492	0.92	862A6502	4809
3.27	502	1.24	**803A6205**	7200
3.21	508	0.89	**862A6205**	4809
3.11	525	0.86	862A6602	4809
3.11	525	1.19	803A6602	7200
3.11	525	1.65	**863A6205**	4676
2.94	556	1.56	863A6602	4675
2.92	560	0.81	**862A6305**	4809
2.86	571	0.79	862A6702	4809
2.84	576	1.08	**803A6305**	7200
2.83	579	1.50	**863A6305**	4676
2.71	604	1.44	863A6702	4675
2.59	632	0.99	803A6702	7200
2.47	664	1.31	**863A6405**	4675
2.44	669	0.93	**803A6405**	7200
2.43	672	0.94	803A6802	7200
2.34	702	1.24	863A6802	4675
2.25	730	0.85	**803A6505**	7200
2.15	763	1.14	**863A6505**	4675
1.95	843	1.03	863A6902	4675
1.90	861	1.01	**863A6605**	4675
1.75	938	0.93	**863A6705**	4675
1.63	1004	0.87	863A7002	4674
1.51	1084	0.80	**863A6805**	4675

0.25 KW MOTOR

Nominal Output Rev/Min	Output Torque Nm	Service Factor	Unit Selection	Overhung Load N
363	6.3	9.35	860A0906	1670
269	8.7	7.85	860A1006	1764
240	9.6	7.09	**860A0907**	1768
237	9.7	7.32	860A1106	1810
209	11	6.76	860A1206	1829
178	13	5.82	**860A1007**	1845
163	14	5.60	860A1406	1841
157	15	5.29	**860A1107**	1844
152	15	5.26	860A1506	1840
138	17	4.77	**860A1207**	1845
120	19	4.36	860A1706	1845
108	21	3.98	**860A1407**	8745
106	22	3.98	860A1806	1845
101	23	3.75	**860A1507**	1831
92.5	25	3.61	860A1906	1800
83.1	28	3.23	860A2006	1879
79.3	29	3.08	**860A1707**	1731
75.4	31	2.93	860A2106	1850
69.9	33	2.70	**860A1807**	1666
68.5	34	2.67	860A2206	1796
61.2	38	2.37	**860A1907**	1647
58.5	39	2.29	860A2306	1860
55.0	42	2.14	**860A2007**	1653
51.6	45	3.57	801A2506	4000
49.9	46	1.95	**860A2107**	1576
48.8	47	1.92	860A2506	1724
45.4	51	1.77	**860A2207**	1507
44.5	52	3.08	**801A2207**	4000
43.0	53	3.01	801A2606	4000
41.8	55	1.66	860A2606	1853
41.0	56	2.85	**801A2307**	4000
41.0	56	3.72	**861A2307**	3873
38.7	60	1.50	**860A2307**	1493
38.2	60	2.67	801A2706	4000
38.2	61	3.46	861A2706	3837
37.7	62	1.47	860A2706	1801
34.1	68	2.37	**801A2507**	3771
34.1	68	3.08	**861A2507**	3771
32.8	70	2.29	801A2906	4000
32.8	71	2.82	861A2906	3921
32.3	71	1.28	**860A2507**	1325
31.3	75	1.13	860A2906	1880
28.9	79	2.03	801A3006	4000
28.9	80	2.56	861A3006	3828
28.5	81	1.99	**801A2607**	3813
28.5	81	2.59	**861A2607**	3695
27.7	83	1.09	**860A2607**	1319
27.3	83	0.87	860A3006	1790
25.5	91	1.77	801A3106	3906
25.5	90	2.29	861A3106	3941
25.3	91	1.77	**801A2707**	3812
25.3	91	2.29	**861A2707**	3695
24.9	92	0.98	**860A2707**	1121
23.9	95	1.69	801A4406	4000
23.9	96	2.18	861A4406	3884
23.3	96	0.94	860A4406	1520
23.3	98	3.46	802A4406	7200
21.7	107	1.50	**801A2907**	3619
21.7	104	1.54	801A4506	4000
21.7	106	1.95	**861A2907**	3562
21.7	105	1.99	861A4506	3772
21.2	109	0.83	860A4506	1230
21.2	107	3.16	802A4506	7200
19.7	115	1.39	801A4606	4000
19.7	116	1.81	861A4606	3443
19.2	122	1.32	**801A3007**	3365
19.2	121	1.73	**861A3007**	3508
18.4	123	2.74	802A4606	7191
18.4	124	3.64	862A4606	7200
17.0	134	2.52	802A4706	7171
17.0	135	3.34	862A4706	7200
16.9	138	1.17	**801A3107**	3071
16.9	137	1.50	**861A3107**	3419
16.8	138	1.17	801A4706	3812
16.8	136	1.54	861A4706	3812
15.8	142	1.13	**801A4407**	3630
15.8	143	1.47	**861A4407**	3331

Nominal Output Rev/Min	Output Torque Nm	Service Factor	Unit Selection	Overhung Load N
15.5	148	2.29	**802A4407**	6774
15.5	148	3.04	**862A4407**	7200
14.4	158	1.02	**801A4507**	3318
14.4	159	1.32	**861A4507**	3243
14.1	161	2.11	802A4906	7200
14.1	162	2.78	862A4906	6902
14.0	164	0.98	801A4906	4000
14.0	164	1.28	861A4906	3251
14.0	164	2.07	**802A4507**	6944
14.0	162	2.78	**862A4507**	7200
13.7	167	3.76	803A4906	7200
13.1	178	0.90	**801A4607**	2986
13.1	174	1.20	**861A4607**	2790
12.5	183	3.42	**803A4507**	7200
12.2	188	1.80	**802A4607**	6749
12.2	188	2.40	**862A4607**	6652
12.0	185	0.87	801A5006	3950
12.0	192	1.09	861A5006	3950
11.8	192	1.77	802A5006	6988
11.8	193	2.33	862A5006	6965
11.4	204	3.08	**803A4607**	7200
11.4	201	3.12	803A5006	7200
11.2	206	1.02	**861A4707**	2359
11.2	205	1.65	**802A4707**	6620
11.2	203	2.22	**862A4707**	6594
10.8	206	1.02	861A5106	3390
10.5	220	1.54	802A5106	7200
10.5	218	2.07	862A5106	6764
9.83	232	2.70	**803A4707**	7200
9.49	238	2.63	803A5106	7200
9.33	244	1.39	**802A4907**	6609
9.33	245	1.84	**862A4907**	6315
9.26	242	0.87	**861A4907**	1920
9.05	253	2.48	**803A4907**	7200
8.97	253	0.83	861A5306	2209
8.97	250	1.36	802A5306	7153
8.97	255	1.77	862A5306	6030
8.42	269	2.33	803A5306	7200
7.90	291	1.17	802A5406	6841
7.90	286	1.58	862A5406	6555
7.78	291	1.17	**802A5007**	5558
7.78	293	1.54	**862A5007**	6146
7.54	304	2.07	**803A5007**	6988
7.25	315	1.99	803A5406	7200
6.95	322	1.06	802A5506	7200
6.95	324	1.39	862A5506	5962
6.90	334	1.02	**802A5107**	6144
6.90	333	1.35	**862A5107**	5841
6.38	355	1.77	803A5506	7200
6.32	359	1.73	803A6006	7200
6.28	363	1.73	**803A5107**	6562
5.94	392	0.87	**802A5307**	5239
5.94	387	1.17	**862A5307**	5023
5.94	382	2.27	863A6006	4677
5.85	389	0.88	802A6006	7125
5.85	388	1.16	862A6006	4809
5.74	395	1.57	803A6106	7200
5.58	407	1.54	**803A5307**	6914
5.24	433	2.00	863A6106	4676
5.23	434	0.79	802A6106	7125
5.23	435	1.04	862A6106	4809
5.23	429	1.05	**862A5407**	4280
4.99	455	1.37	803A6206	7200
4.90	463	0.98	862A6206	4809
4.80	477	1.32	**803A5407**	6375
4.75	477	1.82	863A6206	4676
4.6	500	0.90	**862A5507**	3331
4.45	510	0.89	862A6306	4809
4.34	523	1.19	803A6306	7200
4.32	526	1.65	863A6306	4676
4.23	538	1.17	**803A5507**	5067
4.19	542	1.15	**803A6007**	7200
3.94	577	1.50	**863A6007**	4677
3.80	597	1.04	**803A6107**	7200
3.77	602	1.44	863A6406	4675
3.73	610	1.02	803A6406	7200
3.47	659	1.32	**863A6107**	4676
3.43	661	0.94	803A6506	7200
3.28	692	1.25	863A6506	4675

Series M Gearboxes : Motorised selection

Bold print indicates a 6 pole motor is used

Double reduction (see pages 199-200 for dimensions)
Triple reduction (see pages 199-200 for dimensions)
Quadruple reduction (see pages 201-202 for dimensions)

0.25 KW MOTOR CONTINUED...

Nominal Output Rev/Min	Output Torque Nm	Service Factor	Unit Selection	Overhung Load N
3.15	721	1.20	**863A6207**	4676
3.07	740	0.85	803A6606	7200
2.90	784	1.11	863A6606	4675
2.86	795	1.09	**863A6307**	4676
2.67	851	1.02	863A6706	4675
2.50	912	0.95	**863A6407**	4675
2.30	990	0.88	863A6806	4675
2.17	1048	0.83	**863A6507**	4675

0.37 KW MOTOR

Nominal Output Rev/Min	Output Torque Nm	Service Factor	Unit Selection	Overhung Load N
364	9.3	6.34	860A0908	1652
270	13	5.32	860A1008	1740
243	14	4.85	**860A0912**	1730
237	14	4.97	860A1108	1782
210	16	4.58	860A1208	1782
180	19	3.98	**860A1012**	1795
164	21	3.80	860A1408	1787
158	22	3.62	**860A1112**	1792
152	22	3.57	860A1508	1785
140	25	3.26	**860A1212**	1795
121	28	2.96	860A1708	1795
110	31	2.72	**860A1412**	1795
107	32	2.70	860A1808	1795
102	34	2.57	**860A1512**	1767
92.8	37	2.45	860A1908	1708
83.4	41	2.19	860A2008	1860
80.2	43	2.11	**860A1712**	1575
77.7	44	3.64	801A2108	4000
75.7	45	1.99	860A2108	1804
73.6	47	3.44	**801A1812**	4000
70.7	49	1.85	**860A1812**	1451
68.8	50	1.81	860A2208	1701
67.5	51	3.16	801A2208	4000
64.8	53	3.03	**801A1912**	4000
62.1	55	2.91	801A2308	4000
62.1	55	3.80	861A2308	3856
61.9	56	1.62	**860A1912**	1415
58.7	58	1.56	860A2308	1824
57.0	60	2.67	**801A2012**	4000
57.0	60	3.49	**861A2012**	4000
55.6	62	1.47	**860A2012**	1425
51.8	66	2.41	**801A2112**	4000
51.8	66	2.42	801A2508	3963
51.8	66	3.16	**861A2112**	3933
51.8	66	3.19	861A2508	3681
50.5	68	1.34	**860A2112**	1278
48.9	69	1.30	860A2508	1562
45.9	75	1.21	**860A2212**	1146
45.0	76	2.11	**801A2212**	3841
45.0	76	2.75	**861A2212**	3768
43.1	79	2.04	801A2608	4000
43.1	79	2.65	861A2608	3727
42.0	80	1.12	860A2608	1810
41.4	82	1.95	**801A2312**	3765
41.4	82	2.54	**861A2312**	3657
39.2	88	1.03	**860A2312**	1117
38.3	89	1.81	801A2708	4000
38.3	89	2.35	861A2708	3560
37.8	91	1.00	860A2708	1710
34.5	99	1.62	**801A2512**	3380
34.5	99	2.11	**861A2512**	3380
33.4	102	3.31	**802A2512**	7200
32.9	103	1.56	801A2908	4000
32.9	104	1.91	861A2908	3786
32.6	103	0.88	**860A2512**	795
29.0	116	1.38	801A3008	4000
29.0	117	1.74	861A3008	3533
28.8	118	1.36	**801A2612**	3493
28.8	118	1.77	**861A2612**	3173
28.3	121	2.80	**802A2612**	7200
28.3	121	3.72	**862A2612**	7200
25.9	132	2.57	**802A2712**	7200
25.9	132	3.41	**862A2712**	7200
25.5	134	1.20	801A3108	3819
25.5	133	1.21	**801A2712**	3220
25.5	133	1.56	861A3108	3840
25.5	134	1.57	**861A2712**	3173
24.0	140	1.15	801A4408	4000
24.0	142	1.48	861A4408	3686
23.4	144	2.35	802A4408	7087
23.4	145	3.11	862A4408	7200
22.0	156	1.03	**801A2912**	3267
22.0	155	1.34	**861A2912**	2812
21.8	153	1.05	801A4508	4000
21.8	155	1.35	861A4508	3383
21.3	158	2.14	802A4508	7200
21.3	159	2.83	862A4508	7200
21.1	161	2.11	**802A2912**	7200
21.1	162	2.72	**862A2912**	7200
19.8	170	0.95	801A4608	4000
19.8	171	1.23	861A4608	2930
19.4	178	0.90	**801A3012**	2779
19.4	176	1.18	**861A3012**	2666
18.9	181	1.88	**802A3012**	7200
18.9	180	2.11	**862A3012**	7200
18.9	178	3.52	803A4508	7200
18.5	182	1.86	802A4608	7176
18.5	182	2.47	862A4608	6687
17.2	197	3.16	803A4608	7200
17.0	201	0.80	**801A3112**	2215
17.0	201	1.03	**861A3112**	2423
17.0	198	1.71	802A4708	7123
17.0	199	2.27	862A4708	7005
16.9	203	0.79	801A4708	3640
16.9	200	1.05	861A4708	3640
16.9	203	1.34	**802A3112**	7200
16.9	203	1.34	**862A3112**	7200
16.0	209	1.00	**861A4412**	2186
15.6	216	1.57	**802A4412**	6045
15.6	217	2.08	**862A4412**	6391
15.5	219	3.95	**863A4412**	10000
15.3	224	2.11	**803A3112**	7200
15.0	226	2.78	803A4708	7200
14.5	233	0.90	**861A4512**	1945
14.5	234	3.72	**863A4512**	10000
14.2	240	1.41	**802A4512**	6506
14.2	237	1.43	802A4908	7200
14.2	239	1.89	862A4908	6393
14.2	237	1.90	**862A4512**	6204
14.1	242	0.87	861A4908	2560
13.8	246	2.55	803A4908	7200
13.2	255	0.82	**861A4612**	1674
12.6	269	2.34	**803A4512**	7200
12.4	275	1.23	**802A4612**	5976
12.4	274	1.64	**862A4612**	5713
12.3	278	3.13	**863A4612**	10000
11.8	283	1.20	802A5008	6793
11.8	285	1.58	862A5008	6563
11.5	298	2.11	**803A4612**	7008
11.5	296	2.12	803A5008	7200
11.5	295	2.95	**863A4712**	10000
11.4	300	1.13	**802A4712**	5626
11.4	298	1.52	**862A4712**	5556
10.5	324	1.05	802A5108	7200
10.5	322	1.40	862A5108	6018
9.94	339	1.85	**803A4712**	6645
9.52	351	1.79	803A5108	7200
9.43	357	0.95	**802A4912**	5597
9.43	358	1.26	**862A4912**	4800
9.23	364	2.39	**863A4912**	10000
9.15	370	1.70	**803A4912**	6403
9.00	369	0.92	802A5308	7110
9.00	376	1.20	862A5308	4950
8.45	397	1.58	803A5308	7200
7.93	429	0.79	802A5408	6510
7.93	421	1.07	862A5408	5960
7.86	428	1.06	**862A5012**	4339
7.83	429	2.03	**863A5012**	10000
7.62	444	1.41	**803A5012**	6626
7.27	464	1.35	803A5408	7200
7.15	471	1.85	**863A5112**	10000
6.98	488	0.93	**862A5112**	3513
6.98	478	0.95	862A5508	4820
6.41	523	1.20	803A5508	7200
6.35	529	1.18	803A6008	7200
6.35	531	1.18	**803A5112**	5470
6.00	567	0.80	**862A5312**	3013
5.97	563	1.54	863A6008	4677
5.87	572	0.79	862A6008	4809
5.83	579	1.52	**863A5312**	10000
5.76	583	1.07	803A6108	7200
5.64	596	1.06	**803A5312**	6424
5.26	639	1.36	863A6108	4676
5.23	640	1.39	**863A5412**	8970
5.01	671	0.93	803A6208	7200
4.85	698	0.90	**803A5412**	4961
4.77	704	1.23	863A6208	4676
4.67	722	1.23	**863A5512**	7760
4.33	776	1.12	863A6308	4676
4.27	788	0.80	**803A5512**	3099
4.23	794	0.79	**803A6012**	7200
3.98	844	1.03	**863A6012**	4677
3.98	845	1.66	**864A6012**	18916
3.94	852	3.10	**865A6012**	25710
3.78	888	0.98	863A6408	4675
3.53	952	3.01	**865A6112**	24951
3.52	955	1.58	**864A6112**	17870
3.51	965	0.90	**863A6112**	4676
3.29	1021	0.85	863A6508	4675
3.18	1055	0.82	**863A6212**	4676
3.04	1107	2.59	**865A6212**	24951
3.03	1111	1.36	**864A6212**	17870
2.71	1243	1.21	**864A6312**	17870
2.71	1239	2.31	**865A6312**	24951
2.55	1321	2.17	**865A6412**	24951
2.54	1325	1.14	**864A6412**	17870
2.15	1565	1.83	**865A6512**	24951
2.14	1570	0.96	**864A6512**	17870
1.94	1739	1.65	**865A6612**	24951
1.90	1773	0.87	**864A6612**	16792
1.81	1858	1.54	**865A6712**	24951
1.78	1890	0.82	**864A6712**	16792
1.46	2302	1.25	**865A6812**	24951
1.24	2716	1.06	**865A6912**	24951
1.04	3255	0.88	**865A7012**	24951
0.34	9943	1.08	**868A8012**	80613
0.27	12283	0.88	**868A8112**	80613

0.55 KW MOTOR

Nominal Output Rev/Min	Output Torque Nm	Service Factor	Unit Selection	Overhung Load N
376	13	4.41	860A0916	1625
279	18	3.70	860A1016	1705
245	21	3.45	860A1116	1740
243	21	3.26	**860A0917**	1673
216	24	3.19	860A1216	1711
180	28	2.68	**860A1017**	1720
169	30	2.64	860A1416	1706
158	32	2.44	**860A1117**	1715
157	32	2.48	860A1516	1703
145	35	3.92	**801A1217**	4000
140	37	2.19	**860A1217**	1720
127	40	3.61	801A1716	4000
125	41	2.06	860A1716	1720
114	45	3.25	**801A1417**	4000
114	45	3.33	801A1816	4000
110	47	1.83	**860A1417**	1720
110	46	1.88	860A1816	1720
102	50	1.73	**860A1517**	1671
101	51	2.95	**801A1517**	4000
101	51	3.03	801A1916	4000
101	51	3.74	**861A1517**	4000
101	51	3.82	861A1916	4000
95.9	53	1.70	860A1916	1570

Series M Gearboxes : Motorised selection

Nominal Output Rev/Min	Output Torque Nm	Service Factor	Unit Selection	Overhung Load N
88.4	58	2.78	801A2016	4000
88.4	57	3.58	861A2016	3972
86.2	59	1.53	860A2016	1831
81.6	63	2.52	**801A1717**	4000
81.6	62	3.26	**861A1717**	4000
80.2	64	1.42	**860A1717**	1341
80.2	63	2.53	801A2116	3942
80.2	63	3.29	861A2116	3934
78.2	65	1.38	860A2116	1736
73.6	69	2.31	**801A1817**	4000
73.6	69	3.02	**861A1817**	4000
71.0	72	1.26	860A2216	1558
70.7	73	1.25	**860A1817**	1129
69.8	73	2.20	801A2216	3885
69.8	73	2.87	861A2216	3798
64.8	79	2.04	**801A1917**	4000
64.8	79	2.66	**861A1917**	4000
64.2	79	2.02	801A2316	4000
64.2	79	2.64	861A2316	3719
61.9	83	1.09	**860A1917**	10066
60.6	83	1.08	860A2316	1770
57.0	89	1.80	**801A2017**	4000
57.0	89	2.35	**861A2017**	4000
55.6	92	0.99	**860A2017**	10083
53.5	95	1.68	801A2516	3908
53.5	95	2.22	861A2516	3380
52.4	98	3.47	**802A2117**	7200
51.8	99	1.63	**801A2117**	3921
51.8	99	2.12	**861A2117**	3871
51.7	99	3.43	802A2516	7200
50.6	100	0.91	860A2516	1320
50.5	100	0.90	**860A2117**	830
45.9	111	0.82	**860A2217**	603
45.0	113	1.42	**801A2217**	3604
45.0	113	1.85	**861A2217**	3549
44.6	113	1.42	801A2616	4000
44.6	114	1.84	861A2616	3469
44.2	115	2.93	**802A2217**	7200
44.2	116	3.90	**862A2217**	6989
43.8	116	2.92	802A2616	7200
43.8	116	3.88	862A2616	7200
41.4	122	1.31	**801A2317**	3414
41.4	122	1.71	**861A2317**	3332
41.4	123	2.75	**802A2317**	7200
41.4	123	3.66	**862A2317**	6929
40.0	127	2.67	802A2716	7200
40.0	127	3.56	862A2716	7200
39.6	127	1.26	801A2716	4000
39.6	128	1.63	861A2716	3143
34.5	147	1.09	**801A2517**	2793
34.5	148	1.42	**861A2517**	2793
34.0	148	1.08	801A2916	4000
34.0	150	1.33	861A2916	3584
33.4	152	2.23	**802A2517**	6720
33.4	153	2.95	**862A2517**	6700
32.7	155	2.18	802A2916	7200
32.7	155	2.75	862A2916	7200
30.0	168	0.96	801A3016	4000
30.0	169	1.21	861A3016	3091
29.3	172	1.97	802A3016	7200
29.3	173	2.20	862A3016	7200
28.8	175	0.92	**801A2617**	3013
28.8	176	1.19	**861A2617**	2391
28.3	180	1.88	**802A2617**	6835
28.3	180	2.50	**862A2617**	6491
27.0	189	3.31	**803A2617**	7200
26.4	193	0.84	801A3116	3690
26.4	191	1.08	861A3116	3690
26.4	192	2.75	803A3016	7200
26.2	193	1.40	802A3116	7200
26.2	193	1.40	862A3116	7200
25.9	196	1.73	**802A2717**	6675
25.9	196	2.30	**862A2717**	6491
25.5	198	0.82	**801A2717**	2481
25.5	199	1.06	**861A2717**	2391
24.8	204	1.03	861A4416	3390
24.2	208	1.63	802A4416	6917
24.2	209	2.16	862A4416	6869

Nominal Output Rev/Min	Output Torque Nm	Service Factor	Unit Selection	Overhung Load N
24.0	210	3.59	863A4416	10000
23.7	214	2.20	803A3116	7200
22.9	223	2.81	**803A2717**	7200
22.5	223	0.94	861A4516	2800
22.5	223	3.45	863A4516	10000
22.0	230	0.90	**861A2917**	1687
22.0	228	1.49	802A4516	7200
22.0	229	1.97	862A4516	6652
21.6	234	3.71	**863A2917**	10000
21.1	239	1.42	**802A2917**	6266
21.1	240	1.83	**862A2917**	6249
20.9	244	2.57	**803A2917**	7200
20.4	246	0.85	861A4616	2160
19.6	257	2.44	803A4516	7200
19.4	262	0.80	**861A3017**	1403
19.1	262	1.30	802A4616	7154
19.1	262	1.72	862A4616	5918
19.0	265	3.08	863A4616	10000
18.9	269	1.26	**802A3017**	6393
18.9	268	1.42	**862A3017**	6053
18.8	269	2.61	**863A3017**	10000
17.8	284	2.20	803A4616	7200
17.8	282	2.96	863A4716	10000
17.6	285	1.19	802A4716	7050
17.6	286	1.58	862A4716	6714
17.1	298	1.83	**803A3017**	7200
16.9	301	0.90	**802A3117**	6939
16.9	301	0.90	**862A3117**	6678
16.9	298	2.00	**863A3117**	10000
15.6	321	1.06	**802A4417**	4951
15.6	322	1.40	**862A4417**	5177
15.5	325	1.93	803A4716	7200
15.5	326	2.66	**863A4417**	9221
15.3	333	1.42	**803A3117**	6908
14.7	341	1.00	802A4916	7200
14.7	344	1.31	862A4916	5629
14.5	347	2.50	**863A4517**	9072
14.3	351	2.48	863A4916	10000
14.2	357	0.95	**802A4517**	5849
14.2	353	1.28	**862A4517**	4710
14.2	354	1.77	803A4916	7200
12.6	399	1.57	**803A4517**	7200
12.4	409	0.83	**802A4617**	4817
12.4	408	1.11	**862A4617**	4304
12.3	413	2.11	**863A4617**	8636
12.2	407	0.84	802A5016	6500
12.2	411	1.10	862A5016	5960
12.2	413	2.11	863A5016	10000
11.9	424	4.02	864A5016	20000
11.8	427	1.47	803A5016	7200
11.5	443	1.42	**803A4617**	6720
11.5	438	1.99	**863A4717**	8446
11.4	443	1.02	**862A4717**	3999
11.1	450	1.93	863A5116	10000
10.9	463	0.98	862A5116	4900
10.8	465	3.66	864A5116	20000
9.94	504	1.25	**803A4717**	5812
9.84	506	1.24	803A5116	7200
9.43	533	0.85	**862A4917**	2526
9.30	542	0.84	862A5316	3329
9.23	542	1.61	**863A4917**	8407
9.15	550	1.14	**803A4917**	5209
9.04	552	1.58	863A5316	10000
8.91	564	3.02	**864A4917**	20000
8.79	569	2.99	864A5316	20000
8.73	571	1.10	803A5316	7200
8.11	614	1.42	863A5416	9140
8.05	620	2.75	864A5416	20000
7.83	638	1.37	**863A5017**	7534
7.64	658	2.59	**864A5017**	20000
7.62	660	0.95	**803A5017**	6083
7.51	668	0.94	803A5416	7200
7.23	691	1.26	863A5516	7940
7.15	699	1.25	**863A5117**	7534
6.99	712	2.39	864A5516	20000
6.96	720	2.37	**864A5117**	20000
6.62	753	0.84	803A5516	7200
6.56	762	0.82	803A6016	7200

Nominal Output Rev/Min	Output Torque Nm	Service Factor	Unit Selection	Overhung Load N
6.35	790	0.80	**803A5117**	3831
6.27	758	3.26	**865A5217**	29600
6.16	810	1.07	863A6016	4677
6.16	811	1.73	864A6016	18916
6.11	818	3.23	865A6016	25710
5.83	860	1.02	**863A5317**	5591
5.68	881	1.94	**864A5317**	20000
5.68	885	2.80	**865A5317**	29500
5.47	914	3.14	865A6116	24951
5.45	916	1.64	864A6116	17870
5.43	920	0.95	863A6116	4676
5.23	952	0.94	**863A5417**	4721
5.20	971	1.76	**864A5417**	20000
4.93	1013	0.86	863A6216	4676
4.70	1062	2.70	865A6216	24951
4.69	1066	1.41	864A6216	17870
4.67	1073	0.83	**863A5517**	4084
4.52	1102	1.56	**864A5517**	20000
4.20	1189	2.41	865A6316	24951
4.19	1193	1.26	864A6316	17870
4.14	1208	3.66	**866A6017**	41580
3.98	1256	1.12	**864A6017**	18916
3.94	1267	2.09	**865A6017**	25710
3.94	1266	2.26	865A6416	24951
3.93	1272	1.18	864A6416	17870
3.76	1329	3.32	**866A6117**	41580
3.53	1415	2.03	**865A6117**	24951
3.52	1420	1.06	**864A6117**	17870
3.33	1501	1.91	865A6516	24951
3.32	1507	1.00	864A6516	17870
3.27	1526	2.89	**866A6217**	41580
3.04	1646	1.74	**865A6217**	24951
3.03	1652	0.91	**864A6217**	17870
3.00	1667	1.72	865A6616	24951
2.94	1701	0.91	864A6616	16792
2.89	1730	2.55	**866A6317**	41580
2.81	1782	1.61	865A6716	24951
2.8	1784	3.56	**867A6317**	64632
2.75	1815	0.85	864A6716	16792
2.71	1848	0.82	**864A6317**	17870
2.71	1842	1.56	**865A6317**	24951
2.62	1909	2.31	**866A6417**	41580
2.55	1963	1.46	**865A6417**	24951
2.54	1967	3.23	**867A6417**	64632
2.29	2187	2.02	**866A6517**	41580
2.26	2210	1.30	865A6816	24951
2.22	2253	2.82	**867A6517**	64632
2.15	2326	1.23	**865A6517**	24951
2.06	2430	1.82	**866A6617**	41580
1.97	2540	2.51	**867A6617**	64632
1.94	2584	1.11	**865A6617**	24951
1.92	2605	1.10	865A6916	24951
1.82	2748	1.61	**866A6717**	41580
1.81	2762	1.04	**865A6717**	24951
1.74	2871	2.22	**867A6717**	64632
1.64	3054	3.54	**868A6717**	80613
1.60	3123	0.92	865A7016	24951
1.57	3186	1.39	**866A6817**	41580
1.50	3331	1.91	**867A6817**	64632
1.46	3422	0.84	**865A6817**	24951
1.41	3541	3.06	**868A6817**	80613
1.32	3796	1.17	**866A6917**	41580
1.26	3970	1.60	**867A6917**	64632
1.19	4223	2.56	**868A6917**	80613
1.14	4396	2.44	**868A7017**	80613
1.10	4544	0.98	**866A7017**	41580
1.06	4711	1.35	**867A7017**	64632
0.98	5096	2.10	**868A7117**	80613
0.93	5420	0.82	**866A7117**	41580
0.89	5617	1.14	**867A7117**	64632
0.83	6083	1.76	**868A7217**	80613
0.80	6254	1.02	**867A7217**	64632
0.75	6653	1.61	**868A7317**	80613
0.73	6849	0.93	**867A7317**	64632
0.61	8243	1.23	**868A7417**	80711
0.60	8374	0.76	**867A7417**	64690
0.52	9605	1.12	868A8016	80613
0.51	9880	1.03	**868A7517**	80711
0.44	11379	0.89	**868A7617**	80711
0.42	11912	0.90	868A8116	80613
0.40	12627	0.80	**868A7717**	80711

Series M Gearboxes : Motorised selection

Bold print indicates a 6 pole motor is used

Double reduction (see pages 199-200 for dimensions)
Triple reduction (see pages 199-200 for dimensions)
Quadruple reduction (see pages 201-202 for dimensions)

0.75 KW MOTOR

Nominal Output Rev/Min	Output Torque Nm	Service Factor	Unit Selection	Overhung Load N
376	18	3.23	860A0918	1596
279	25	2.71	860A1018	1665
247	28	2.43	**860A0923**	1610
245	28	2.53	860A1118	1694
216	32	2.34	860A1218	1633
184	38	3.47	**801A1023**	4000
183	38	2.00	**860A1023**	1636
177	39	3.47	801A1418	4000
169	41	1.94	860A1418	1616
167	42	3.22	**801A1123**	4000
167	42	3.82	**861A1123**	4000
161	43	1.82	**860A1123**	1630
157	44	1.82	860A1518	1612
156	45	3.13	801A1518	4000
156	45	3.75	861A1518	4000
147	47	2.92	**801A1223**	4000
147	47	3.53	**861A1223**	4000
142	49	1.64	**860A1223**	1636
127	55	2.65	801A1718	4000
127	55	3.27	861A1718	4000
125	56	1.51	860A1718	1636
116	60	2.42	**801A1423**	4000
116	60	3.04	**861A1423**	4000
114	61	2.44	801A1818	4000
114	61	3.06	861A1818	4000
111	62	1.37	**860A1423**	1636
110	63	1.38	860A1818	1636
103	68	1.29	**860A1523**	1565
102	68	2.20	**801A1523**	4000
102	68	2.79	**861A1523**	4000
101	69	2.22	801A1918	4000
101	69	2.81	861A1918	4000
95.9	72	1.25	860A1918	1417
88.4	79	2.04	801A2018	3968
88.4	78	2.62	861A2018	3957
86.2	81	1.12	860A2018	1800
83.0	84	1.88	**801A1723**	4000
83.0	84	2.43	**861A1723**	4000
81.5	85	1.06	**860A1723**	1081
81.1	86	3.95	802A2118	6430
80.2	86	1.86	801A2118	3878
80.2	86	2.42	861A2118	3898
78.2	89	1.02	860A2118	1660
74.8	93	1.73	**801A1823**	4000
74.8	93	2.25	**861A1823**	4000
73.8	94	3.59	**802A1823**	6590
71.9	97	0.93	**860A1823**	770
71.0	98	0.93	860A2218	1400
69.8	100	1.61	801A2218	3757
69.8	100	2.11	861A2218	3689
68.5	101	3.34	802A2218	6750
65.9	106	1.52	**801A1923**	4000
65.9	106	1.98	**861A1923**	4000
64.2	108	1.48	801A2318	4000
64.2	108	1.94	861A2318	3568
64.1	108	3.13	802A2318	6880
63.5	110	3.09	**802A1923**	6880
62.9	111	0.81	**860A1923**	678
58.0	120	1.34	**801A2023**	4000
58.0	120	1.75	**861A2023**	4000
56.8	122	2.77	**802A2023**	7100
56.8	122	3.68	**862A2023**	6381
53.5	130	1.24	801A2518	3847
53.5	129	1.63	861A2518	3045
53.3	131	2.59	**802A2123**	7050
53.3	131	3.45	**862A2123**	6708
52.7	132	1.21	**801A2123**	3833
52.7	132	1.59	**861A2123**	3801
51.7	134	2.52	802A2518	7052
51.7	135	3.35	862A2518	6723
45.8	152	1.06	**801A2223**	3341
45.8	152	1.38	**861A2223**	3306
44.9	155	2.19	**802A2223**	6996
44.9	155	2.91	**862A2223**	6755
44.6	154	1.04	801A2618	4000
44.6	155	1.35	861A2618	3182
43.8	158	2.14	802A2618	7124
43.8	158	2.84	862A2618	6875
42.1	164	0.98	**801A2323**	3023
42.1	164	1.28	**861A2323**	2971
42.1	165	2.05	**802A2323**	6915
42.1	165	2.73	**862A2323**	6628
41.8	166	3.76	803A2618	7200
40.0	173	1.96	802A2718	7147
40.0	173	2.61	862A2718	6769
39.6	174	0.93	801A2718	4000
39.6	175	1.20	861A2718	2680
36.3	192	3.27	**803A2323**	7200
35.4	195	3.21	803A2718	7200
35.1	198	0.81	**801A2523**	2141
35.1	198	1.06	**861A2523**	2141
34.0	205	0.98	861A2918	3360
34.0	205	3.06	**803A2523**	7200
33.9	204	1.66	**802A2523**	6186
33.9	205	2.20	**862A2523**	6145
32.7	212	1.60	802A2918	6970
32.7	211	2.01	862A2918	6865
32.4	215	2.92	803A2918	7200
30.0	230	0.89	861A3018	2600
29.3	236	0.89	**861A2623**	1521
29.3	235	1.44	802A3018	7178
29.3	236	1.61	862A3018	6658
29.1	237	2.96	863A3018	10000
28.9	240	3.62	**863A2623**	9420
28.8	241	1.41	**802A2623**	6429
28.8	242	1.87	**862A2623**	5704
27.4	254	2.47	**803A2623**	7200
26.4	262	2.01	803A3018	7200
26.3	263	1.29	**802A2723**	6093
26.3	263	1.71	**862A2723**	5704
26.3	263	3.31	**863A2723**	9420
26.2	264	1.03	802A3118	7200
26.2	264	1.03	862A3118	7200
26.2	263	2.27	863A3118	10000
24.2	283	1.20	802A4418	6729
24.2	284	1.59	862A4418	6502
24.0	286	2.64	863A4418	9458
23.7	292	1.61	803A3118	7200
23.3	299	2.10	**803A2723**	7010
22.5	305	2.53	863A4518	9349
22.0	310	1.09	802A4518	7200
22.0	313	1.44	862A4518	6044
22.0	314	2.77	**863A2923**	9183
21.5	321	1.06	**802A2923**	5229
21.5	322	1.37	**862A2923**	5192
21.2	327	1.92	**803A2923**	6813
19.6	350	1.79	803A4518	7200
19.3	360	0.94	**802A3023**	5497
19.3	360	1.06	**862A3023**	4778
19.1	357	0.95	802A4618	7130
19.1	358	1.26	862A4618	5064
19.1	361	1.94	**863A3023**	9043
19.0	361	2.26	863A4618	9454
17.8	388	1.61	803A4618	7200
17.8	385	2.17	863A4718	9288
17.6	389	0.87	802A4718	6970
17.6	390	1.16	862A4718	6390
17.3	399	1.37	**803A3023**	7193
17.2	400	1.50	**863A3123**	9208
16.6	415	3.74	**864A3123**	20000
15.9	432	1.05	**862A4423**	3829
15.7	437	1.98	**863A4423**	8355
15.6	446	1.06	**803A3123**	6584
15.5	443	1.42	803A4718	7200
14.8	466	1.87	**863A4523**	8042
14.7	469	0.96	862A4918	4780
14.4	473	0.96	**862A4523**	3050
14.3	478	1.82	863A4918	8661
14.2	483	1.30	803A4918	7200
14.1	488	3.49	**864A4523**	20000
13.8	495	3.44	864A4918	20000
12.8	535	1.17	**803A4523**	7200
12.6	547	0.83	**862A4623**	2739
12.5	554	1.57	**863A4623**	7121
12.4	554	3.08	**864A4623**	20000
12.2	563	1.55	863A5018	8450
11.9	578	2.95	864A5018	19337
11.8	582	1.08	803A5018	7200
11.7	594	1.06	**803A4623**	6400
11.7	588	1.48	**863A4723**	6721
11.1	614	1.42	863A5118	7996
11.0	624	2.73	**864A4723**	20000
10.8	633	2.69	864A5118	19051
10.2	677	0.93	**803A4723**	4888
9.84	690	0.91	803A5118	7200
9.72	703	3.52	865A5218	29600
9.38	726	1.20	**863A4923**	6637
9.30	738	0.85	**803A4923**	3882
9.06	756	2.25	**864A4923**	18367
9.04	752	1.16	863A5318	6910
8.80	774	3.19	865A5318	29600
8.79	776	2.20	864A5318	19410
8.11	837	1.04	863A5418	5530
8.05	846	2.01	864A5418	18989
7.96	855	1.02	**863A5023**	4794
7.94	866	3.31	**865A5023**	29500
7.77	882	1.93	**864A5023**	17935
7.27	938	0.93	**863A5123**	4794
7.23	943	0.93	863A5518	3899
7.19	955	3.00	**865A5123**	29500
7.07	966	1.77	**864A5123**	17545
6.99	971	1.76	864A5518	18252
6.38	1017	2.43	**865A5223**	29442
6.16	1105	0.79	863A6018	4677
6.16	1105	1.27	864A6018	18916
6.11	1115	2.37	865A6018	25710
5.83	1169	3.78	866A6118	41580
5.78	1187	2.09	**865A5323**	29330
5.77	1181	1.44	**864A5323**	17044
5.47	1246	2.30	865A6118	24951
5.45	1249	1.21	864A6118	17870
5.28	1302	1.31	**864A5423**	16406
5.07	1344	3.29	866A6218	41580
4.70	1448	1.98	865A6218	24951
4.69	1453	1.04	864A6218	17870
4.59	1479	1.16	**864A5523**	15789
4.47	1523	2.90	866A6318	41580
4.21	1620	2.73	**866A6023**	41580
4.20	1621	1.77	865A6318	24951
4.19	1627	0.93	864A6318	17870
4.08	1670	3.81	**867A6023**	64632
4.05	1684	0.84	**864A6023**	18916
4.05	1680	2.63	866A6418	41580
4.01	1699	1.56	**865A6023**	25710
3.94	1727	1.66	865A6418	24951
3.93	1735	0.87	864A6418	17870
3.93	1731	3.67	867A6418	64632
3.82	1783	2.48	**866A6123**	41580
3.71	1837	3.46	**867A6123**	64632
3.59	1899	1.51	**865A6123**	24951
3.54	1924	2.30	866A6518	41580
3.44	1984	3.21	867A6518	64632
3.33	2047	1.40	865A6518	24951
3.33	2047	2.16	**866A6223**	41580
3.23	2110	3.01	**867A6223**	64632
3.19	2138	2.07	866A6618	41580
3.09	2208	1.30	**865A6223**	24951
3.05	2235	2.85	867A6618	64632
3.00	2274	1.26	865A6618	24951
2.94	2321	1.90	**866A6323**	41580
2.85	2393	2.66	**867A6323**	64632
2.82	2417	1.83	866A6718	41580
2.81	2430	1.18	865A6718	24951
2.76	2471	1.16	**865A6323**	24951
2.70	2528	2.52	867A6718	64632
2.66	2561	1.73	**866A6423**	41580
2.59	2633	1.09	**865A6423**	24951
2.58	2639	2.41	**867A6423**	64632
2.43	2803	1.58	866A6818	41580

Series M Gearboxes : Motorised selection

Nominal Output Rev/Min	Output Torque Nm	Service Factor	Unit Selection	Overhung Load N
2.38	2869	3.70	**868A6423**	80613
2.33	2931	2.17	867A6818	64632
2.32	2934	1.51	**866A6523**	41580
2.26	3013	0.95	865A6818	24951
2.26	3022	2.11	**867A6523**	64632
2.19	3121	0.92	**865A6523**	24951
2.19	3109	3.48	868A6818	80613
2.09	3260	1.36	**866A6623**	41580
2.08	3286	3.23	**868A6523**	80613
2.04	3344	1.32	866A6918	41580
2.00	3407	1.87	**867A6623**	64632
1.97	3467	0.83	**865A6623**	24951
1.95	3496	1.82	867A6918	64632
1.92	3552	0.81	865A6918	24951
1.88	3623	2.99	**868A6623**	80613
1.85	3686	1.20	**866A6723**	41580
1.84	3716	2.91	868A6918	80613
1.77	3852	1.65	**867A6723**	64632
1.76	3868	2.77	868A7018	80613
1.71	3996	1.11	866A7018	41580
1.67	4097	2.64	**868A6723**	80613
1.65	4143	1.54	867A7018	64632
1.60	4274	1.04	**866A6823**	41580
1.53	4468	1.43	**867A6823**	64632
1.52	4485	2.39	868A7118	80613
1.44	4750	2.28	**868A6823**	80613
1.43	4770	0.93	866A7118	41580
1.38	4943	1.29	867A7118	64632
1.34	5092	0.87	**866A6923**	41580
1.28	5326	1.20	**867A6923**	64632
1.28	5350	2.00	868A7218	80613
1.24	5496	0.81	866A7218	41580
1.24	5501	1.16	867A7218	64632
1.21	5666	1.91	**868A6923**	80613
1.17	5856	1.83	868A7318	80613
1.16	5897	1.82	**868A7023**	80613
1.13	6032	1.06	867A7318	64632
1.08	6320	1.01	**867A7023**	64632
1.00	6837	1.57	**868A7123**	80613
0.94	7247	1.40	868A7418	80711
0.93	7376	0.87	867A7418	64690
0.91	7536	0.85	**867A7123**	64632
0.84	8160	1.32	**868A7223**	80613
0.79	8702	1.17	868A7518	80711
0.77	8925	1.20	**868A7323**	80613
0.68	10013	1.01	868A7618	80711
0.62	11126	0.91	868A7718	80711
0.62	11059	0.92	**868A7423**	80711
0.52	13098	0.82	868A8018	80613

1.1 KW MOTOR

Nominal Output Rev/Min	Output Torque Nm	Service Factor	Unit Selection	Overhung Load N
402	25	3.97	801A0924	3750
384	26	2.25	860A0924	1543
287	36	3.26	801A1024	3950
287	35	3.81	861A1024	3920
285	36	1.89	860A1024	1596
260	39	3.08	801A1124	4000
260	39	3.59	861A1124	3970
258	39	2.92	**801A0927**	39
258	39	3.40	**861A0927**	39
250	40	1.77	860A1124	1613
247	41	1.66	**860A0927**	41
229	45	2.86	801A1224	3992
229	44	3.32	861A1224	3990
221	46	1.63	860A1224	1496
184	55	2.37	**801A1027**	55
184	55	2.77	**861A1027**	55
183	56	1.36	**860A1027**	55
180	56	2.42	801A1424	4000
180	57	2.85	861A1424	4000
173	59	1.35	860A1424	1459
167	61	2.19	**801A1127**	61
167	61	2.61	**861A1127**	61

Nominal Output Rev/Min	Output Torque Nm	Service Factor	Unit Selection	Overhung Load N
161	63	1.24	**860A1127**	63
161	63	1.27	860A1524	1452
159	64	2.18	801A1524	4000
159	64	2.61	861A1524	4000
147	69	1.99	**801A1227**	69
147	70	2.41	**861A1227**	69
142	72	1.12	**860A1227**	72
130	79	1.85	801A1724	4000
130	79	2.28	861A1724	4000
127	80	1.05	860A1724	1490
117	87	1.70	801A1824	4000
117	87	2.14	861A1824	4000
116	88	1.65	**801A1427**	88
116	88	2.07	**861A1427**	88
115	89	3.61	802A1824	5720
112	91	0.96	860A1824	1490
111	92	0.93	**860A1427**	91
103	99	0.88	**860A1527**	98
103	99	1.55	801A1924	4000
103	99	1.96	861A1924	4000
102	100	1.50	**801A1527**	100
102	100	1.91	**861A1527**	99
98.8	103	3.19	802A1924	5940
97.9	104	0.87	860A1924	1150
90.2	113	1.42	801A2024	3913
90.2	112	1.83	861A2024	3931
88.3	115	2.94	802A2024	6130
88.3	115	3.91	862A2024	5743
83.0	124	1.28	**801A1727**	123
83.0	123	1.66	**861A1727**	122
82.9	123	2.75	802A2124	6229
82.9	123	3.66	862A2124	5832
81.9	124	1.30	801A2124	3767
81.9	124	1.68	861A2124	3836
74.8	136	1.18	**801A1827**	136
74.8	136	1.54	**861A1827**	136
73.8	138	2.45	**802A1827**	137
73.8	138	3.09	**862A1827**	138
71.2	143	1.12	801A2224	3534
71.2	143	1.47	861A2224	3498
69.9	146	2.33	802A2224	6512
69.9	146	3.09	862A2224	6042
65.9	155	1.04	**801A1927**	154
65.9	155	1.35	**861A1927**	154
65.5	155	1.03	801A2324	4000
65.5	155	1.35	861A2324	3303
65.5	155	2.18	802A2324	6624
65.5	156	2.89	862A2324	5957
63.5	161	2.11	**802A1927**	160
63.5	161	2.80	**862A1927**	161
58.0	176	0.92	**801A2027**	175
58.0	175	1.20	**861A2027**	175
56.8	179	1.89	**802A2027**	179
56.8	180	2.51	**862A2027**	179
56.5	181	3.47	803A2324	7200
54.6	187	0.86	801A2524	3740
54.6	185	1.13	861A2524	2459
53.3	192	1.77	**802A2127**	191
53.3	192	2.35	**862A2127**	191
52.9	193	3.26	803A2524	7200
52.8	193	1.76	802A2524	6794
52.8	193	2.33	862A2524	6188
52.7	194	0.83	**801A2127**	193
52.7	194	1.08	**861A2127**	193
51.3	199	3.00	**803A2027**	199
45.9	223	2.82	**803A2127**	222
45.8	223	0.94	**861A2227**	222
45.5	223	0.94	861A2624	2680
45.1	226	3.71	**863A2227**	8987
44.9	227	1.49	**802A2227**	226
44.9	227	1.98	**862A2227**	227
44.9	226	3.72	863A2624	231
44.8	227	1.49	802A2624	6991
44.8	228	1.98	862A2624	6307
43.0	237	2.64	**803A2227**	237
42.7	239	2.62	803A2624	7200
42.1	241	0.87	**861A2327**	241
42.1	243	1.40	**802A2327**	242

Nominal Output Rev/Min	Output Torque Nm	Service Factor	Unit Selection	Overhung Load N
42.1	242	1.86	**862A2327**	242
41.0	248	3.43	863A2724	252
40.9	248	1.37	802A2724	7055
40.9	248	1.82	862A2724	6015
40.4	252	0.84	861A2724	1870
39.9	255	3.32	**863A2327**	8888
36.3	281	2.23	**803A2327**	281
36.2	281	2.23	803A2724	7200
34.4	296	2.91	**863A2527**	8888
34.2	296	2.92	863A2924	302
34.0	300	2.09	**803A2527**	300
33.9	299	1.13	**802A2527**	299
33.9	300	1.50	**862A2527**	300
33.4	304	1.12	802A2924	6568
33.4	303	1.40	862A2924	6279
33.0	308	2.04	803A2924	7200
30.0	337	1.01	802A3024	7140
30.0	339	1.12	862A3024	5712
29.7	340	2.06	863A3024	347
28.9	352	2.47	**863A2627**	8405
28.8	354	0.96	**802A2627**	354
28.8	354	1.28	**862A2627**	354
27.4	372	1.69	**803A2627**	372
27.0	376	1.40	803A3024	7200
26.7	377	1.58	863A3124	385
26.3	386	0.88	**802A2727**	386
26.3	386	1.17	**862A2727**	386
26.3	385	2.26	**863A2727**	8405
25.9	391	3.94	864A3124	399
24.7	407	0.84	802A4424	6400
24.7	409	1.11	862A4424	5860
24.5	411	1.84	863A4424	420
24.2	420	1.12	803A3124	7200
23.9	419	3.82	864A4424	427
23.3	438	1.43	**803A2727**	438
23.0	437	1.77	863A4524	446
22.4	449	1.01	862A4524	4980
22.0	461	1.89	**863A2927**	7755
21.9	460	3.59	864A4524	470
21.5	473	0.93	**862A2927**	473
21.2	480	1.31	**803A2927**	479
20.9	488	3.49	**864A2927**	20000
20.0	502	1.25	803A4524	513
19.5	514	0.88	862A4624	3570
19.4	519	1.58	863A4624	529
19.3	520	3.27	864A4624	530
19.1	530	1.33	**863A3027**	7370
19.1	532	3.20	**864A3027**	20000
18.2	552	1.51	863A4724	564
18.1	556	1.12	803A4624	568
17.3	586	0.93	**803A3027**	585
17.2	587	1.02	**863A3127**	7823
17.1	587	2.90	864A4724	598
16.6	608	2.55	**864A3127**	18720
15.8	636	0.99	803A4724	649
15.7	641	1.35	**863A4427**	6840
15.4	656	2.60	**864A4427**	20000
15.4	656	4.03	865A4824	669
15.2	670	3.69	**865A3227**	29600
14.8	683	1.28	**863A4527**	6240
14.6	687	1.27	863A4924	701
14.5	693	0.91	803A4924	708
14.1	716	2.38	**864A4527**	18126
14.1	711	2.40	864A4924	726
13.9	724	3.65	865A4924	739
13.5	753	3.22	**865A3327**	29600
12.5	812	1.07	**863A4627**	4470
12.4	808	1.08	863A5024	825
12.4	812	2.10	**864A4627**	17846
12.4	814	3.52	865A5024	831
12.1	830	2.05	864A5024	844
11.7	862	1.01	**863A4727**	3701
11.4	882	0.99	863A5124	900
11.3	899	3.18	**865A4727**	29500
11.2	900	3.18	865A5124	919
11.0	915	1.86	**864A4727**	17539
11.0	910	1.87	864A5124	928
9.92	1010	2.45	865A5224	1031
9.85	1022	2.59	**865A4827**	29400

Series M Gearboxes : Motorised selection

Bold print indicates a 6 pole motor is used

Double reduction (see pages 199-200 for dimensions)
Triple reduction (see pages 199-200 for dimensions)
Quadruple reduction (see pages 201-202 for dimensions)

Nominal Output Rev/Min	Output Torque Nm	Service Factor	Unit Selection	Overhung Load N
9.38	1066	0.82	**863A4927**	3539
9.20	1087	3.84	866A5324	1109
9.06	1109	1.54	**864A4927**	15510
8.99	1112	2.23	865A5324	1135
8.98	1114	1.53	864A5324	1138
8.93	1129	2.34	**865A4927**	29300
8.22	1215	1.40	864A5424	1244
7.94	1270	2.26	**865A5027**	29282
7.77	1294	1.32	**864A5027**	14323
7.19	1401	2.05	**865A5127**	29258
7.14	1395	1.22	864A5524	1424
7.12	1410	3.13	**866A5127**	49100
7.07	1417	1.21	**864A5127**	13333
6.81	1474	2.83	**866A5227**	49100
6.54	1526	2.89	866A6024	1536
6.38	1492	1.66	**865A5227**	29166
6.30	1587	0.89	864A6024	1588
6.24	1601	1.65	865A6024	1621
5.95	1679	2.63	866A6124	1689
5.91	1694	2.47	**866A5327**	48700
5.78	1741	1.42	**865A5327**	29033
5.77	1733	0.99	**864A5327**	11871
5.77	1730	3.67	867A6124	1737
5.58	1789	1.60	865A6124	1808
5.57	1794	0.84	864A6124	1795
5.28	1910	0.89	**864A5427**	10117
5.18	1930	2.29	866A6224	1940
5.02	1988	3.20	867A6224	1995
4.80	2080	1.38	865A6224	2103
4.57	2188	2.02	866A6324	2198
4.43	2255	2.82	867A6324	2260
4.29	2328	1.23	865A6324	2349
4.21	2376	1.86	**866A6027**	41580
4.14	2413	1.83	866A6424	2426
4.08	2449	2.60	**867A6027**	64632
4.03	2480	1.16	865A6424	2506
4.02	2486	2.56	867A6424	2494
4.01	2492	1.06	**865A6027**	25710
3.82	2614	1.69	**866A6127**	41580
3.71	2694	2.36	**867A6127**	64632
3.70	2703	3.93	868A6424	2713
3.62	2763	1.60	866A6524	2776
3.59	2785	1.03	**865A6127**	24951
3.51	2849	2.23	867A6524	2854
3.41	2929	3.62	**868A6127**	80613
3.40	2940	0.98	865A6524	2968
3.33	3003	1.47	**866A6227**	41580
3.26	3071	1.44	866A6624	3081
3.23	3095	2.06	**867A6227**	64632
3.23	3096	3.43	868A6524	3105
3.11	3210	1.98	867A6624	3216
3.09	3239	0.89	**865A6227**	24951
3.06	3265	0.88	865A6624	3293
2.97	3365	3.16	**868A6227**	80613
2.94	3405	1.30	**866A6327**	41580
2.93	3413	3.17	868A6624	3420
2.88	3471	1.28	866A6724	3481
2.87	3490	0.82	865A6724	3514
2.85	3510	1.81	**867A6327**	64632
2.75	3631	1.75	867A6724	3633
2.66	3757	1.18	**866A6427**	41580
2.62	3814	2.78	**868A6327**	80613
2.59	3859	2.80	868A6724	3864
2.58	3871	1.65	**867A6427**	64632
2.48	4026	1.10	866A6824	4033
2.38	4209	1.51	867A6824	4209
2.38	4208	2.52	**868A6427**	80613
2.32	4303	1.03	**866A6527**	41580
2.26	4433	1.44	**867A6527**	64632
2.24	4464	2.42	868A6824	4475
2.09	4782	0.93	**866A6627**	41580
2.08	4802	0.92	866A6924	4804
2.08	4819	2.20	**868A6527**	80613
2.00	4997	1.28	**867A6627**	64632
1.99	5020	1.27	867A6924	5013
1.88	5336	2.03	868A6924	5330
1.88	5314	2.04	**868A6627**	80613
1.85	5406	0.82	**866A6727**	41580
1.80	5555	1.93	868A7024	5534
1.77	5650	1.13	**867A6727**	64632
1.68	5950	1.07	867A7024	5911
1.67	6009	1.80	**868A6727**	80613
1.55	6440	1.67	868A7124	6410
1.53	6554	0.97	**867A6827**	64632
1.44	6967	1.56	**868A6827**	80613
1.41	7099	0.90	867A7124	7043
1.30	7684	1.40	868A7224	7636
1.28	7811	0.82	**867A6927**	64632
1.27	7901	0.81	867A7224	7829
1.21	8309	1.30	**868A6927**	80613
1.19	8410	1.28	868A7324	8356
1.16	8649	1.24	**868A7027**	80613
1.00	10028	1.07	**868A7127**	80613
0.96	10408	0.98	868A7424	10314
0.84	11968	0.90	**868A7227**	80613
0.80	12497	0.81	868A7524	12351
0.77	13090	0.82	**868A7327**	80613

1.5 KW MOTOR

Nominal Output Rev/Min	Output Torque Nm	Service Factor	Unit Selection	Overhung Load N
402	34	2.91	801A0928	3728
402	34	3.43	861A0928	3690
384	36	1.65	860A0928	1484
287	49	2.40	801A1028	3917
287	48	2.80	861A1028	3898
285	49	1.39	860A1028	1517
262	53	2.18	**801A0937**	3100
262	53	2.54	**861A0937**	2300
260	54	2.26	801A1128	3967
260	53	2.63	861A1128	3948
251	55	1.24	**860A0937**	980
250	55	1.30	860A1128	1521
229	61	2.10	801A1228	3984
229	60	2.43	861A1228	3982
221	63	1.20	860A1228	1340
187	74	1.77	**801A1037**	3100
187	74	2.07	**861A1037**	2300
187	75	3.65	**802A1037**	5180
186	75	1.02	**860A1037**	980
180	77	1.77	801A1428	4000
180	77	2.09	861A1428	4000
173	80	0.99	860A1428	1280
170	82	1.64	**801A1137**	3100
170	82	1.94	**861A1137**	2300
167	84	3.42	**802A1137**	5270
164	85	0.93	**860A1137**	980
161	86	0.93	860A1528	1270
159	88	1.60	801A1528	4000
159	88	1.92	861A1528	4000
150	93	1.49	**801A1237**	3100
150	93	1.79	**861A1237**	2300
149	94	3.13	**802A1237**	5360
144	96	0.83	**860A1237**	980
130	107	1.36	801A1728	4000
130	107	1.67	861A1728	4000
118	118	1.23	**801A1437**	3100
118	118	1.55	**861A1437**	2300
117	119	1.25	801A1828	4000
117	119	1.57	861A1828	4000
117	119	2.61	**802A1437**	5530
117	119	3.77	**862A1437**	5060
115	121	2.65	802A1828	5611
115	121	3.52	862A1828	5158
104	134	1.12	**801A1537**	3100
104	134	1.42	**861A1537**	2300
103	135	1.14	801A1928	4000
103	136	1.44	861A1928	4000
103	135	2.36	**802A1537**	5670
103	135	3.33	**862A1537**	5460
98.8	141	2.34	802A1928	5814
98.8	141	3.20	862A1928	5238
90.2	154	1.04	801A2028	3850
90.2	153	1.34	861A2028	3901
88.3	157	2.16	802A2028	5915
88.3	157	2.87	862A2028	5630
86.4	161	2.07	**802A1737**	5920
86.4	161	2.79	**862A1737**	5700
84.3	166	0.96	**801A1737**	2600
84.3	165	1.24	**861A1737**	2300
82.9	168	2.02	802A2128	6000
82.9	168	2.69	862A2128	5710
81.9	169	0.95	801A2128	3640
81.9	169	1.24	861A2128	3764
79.8	174	3.42	803A2028	7200
76.0	183	0.88	**801A1837**	2300
76.0	183	1.15	**861A1837**	2300
75.0	186	1.83	**802A1837**	6119
75.0	186	2.30	**862A1837**	5732
71.4	195	3.22	803A2128	7200
71.2	195	0.83	801A2228	3280
71.2	195	1.08	861A2228	3280
69.9	199	1.71	802A2228	6240
69.9	199	2.27	862A2228	5869
69.8	200	3.13	**803A1837**	7200
66.9	208	1.01	**861A1937**	2300
66.9	208	3.02	803A2228	7200
65.6	212	3.82	**863A1937**	8921
65.5	212	0.99	861A2328	3000
65.5	212	1.60	802A2328	6333
65.5	212	2.12	862A2328	5651
64.5	216	1.57	**802A1937**	6331
64.5	216	2.09	**862A1937**	5904
62.0	223	3.65	863A2328	9013
60.6	230	2.30	**803A1937**	7200
58.9	235	0.89	**861A2037**	2050
57.8	240	3.41	**863A2037**	8727
57.7	241	1.41	**802A2037**	6489
57.7	241	1.87	**862A2037**	6028
56.5	246	2.55	803A2328	7200
54.6	253	0.83	861A2528	1789
54.1	258	1.32	**802A2137**	6491
54.1	257	1.75	**862A2137**	6212
53.5	260	0.81	**861A2137**	1900
53.5	259	3.19	863A2528	8800
52.9	263	2.39	803A2528	7200
52.8	263	1.29	802A2528	6499
52.8	263	1.71	862A2528	5575
52.5	265	3.12	**863A2137**	8543
52.1	267	2.24	**803A2037**	7200
46.6	299	2.10	**803A2137**	7200
45.8	303	2.77	**863A2237**	8251
45.7	305	1.11	**802A2237**	6232
45.7	305	1.48	**862A2237**	5787
44.9	309	2.73	863A2628	8966
44.8	309	1.10	802A2628	6840
44.8	310	1.45	862A2628	5658
43.7	319	1.97	**803A2237**	7200
42.8	326	1.04	**802A2337**	5846
42.8	325	1.39	**862A2337**	5501
42.7	326	1.92	803A2628	7200
41.0	338	2.51	863A2728	8670
40.9	338	1.00	802A2728	6950
40.9	338	1.34	862A2728	5153
40.5	342	2.48	**863A2337**	8080
36.9	378	1.66	**803A2337**	7200
36.2	383	1.64	803A2728	7200
35.0	397	2.17	**863A2537**	8080
34.6	403	1.56	**803A2537**	7200
34.5	401	0.85	**802A2537**	4186
34.5	403	1.12	**862A2537**	4063
34.2	404	2.14	863A2928	8583
33.4	415	0.82	802A2928	6110
33.4	413	1.03	862A2928	5610
33.0	420	1.49	803A2928	7200
32.5	426	3.97	864A2928	20000
29.8	466	3.63	864A3028	20000

Series M Gearboxes : Motorised selection

Nominal Output Rev/Min	Output Torque Nm	Service Factor	Unit Selection	Overhung Load N
29.7	464	1.51	863A3028	8708
29.3	473	1.84	**863A2637**	7246
29.2	475	0.95	**862A2637**	2754
28.6	486	3.50	**864A2637**	20000
27.9	499	1.26	**803A2637**	7200
27.0	513	1.03	803A3028	7200
26.8	517	1.68	**863A2737**	7246
26.7	518	0.87	**862A2737**	2754
26.7	514	1.16	863A3128	10000
26.1	529	3.79	865A3128	29700
26.0	534	3.19	**864A2737**	20000
25.9	533	2.89	864A3128	19737
24.5	561	1.35	863A4428	7426
24.2	572	0.83	803A3128	7200
23.9	571	2.81	864A4428	19600
23.6	588	1.07	**803A2737**	6301
23.0	596	1.30	863A4528	6908
22.3	618	1.41	**863A2937**	6122
21.9	628	2.63	864A4528	19310
21.6	644	0.98	**803A2937**	5363
21.2	654	2.60	**864A2937**	18642
21.0	659	3.75	865A3328	29600
20.0	685	0.92	803A4528	7200
19.4	711	0.99	**863A3037**	5457
19.4	707	1.16	863A4628	7410
19.4	713	2.39	**864A3037**	18360
19.3	709	2.40	864A4628	18882
18.2	753	1.11	863A4728	6620
17.5	787	3.64	865A4728	29600
17.1	800	2.13	864A4728	19178
17.1	810	2.40	**865A3137**	29600
16.9	816	1.90	**864A3137**	17258
16.0	860	1.01	**863A4437**	5110
15.8	875	3.02	**865A4437**	29500
15.6	880	1.94	**864A4437**	18038
15.4	899	2.75	**865A3237**	29472
15.4	894	2.96	865A4828	29462
15.0	917	0.95	**863A4537**	4180
14.6	936	0.93	863A4928	3640
14.3	961	1.77	**864A4537**	15984
14.2	972	2.72	**865A4537**	29400
14.1	969	1.76	864A4928	17066
13.9	987	2.68	865A4928	29434
13.7	1010	2.40	**865A3337**	29372
13.1	1045	3.61	866A4928	49600
12.7	1087	2.64	**865A4637**	29400
12.6	1090	1.57	**864A4637**	15384
12.4	1110	2.58	865A5028	29348
12.1	1131	1.51	864A5028	16851
11.4	1207	2.37	**865A4737**	29318
11.2	1228	1.39	**864A4737**	14726
11.2	1227	2.34	865A5128	29320
11.1	1234	3.58	866A5128	49300
11.0	1240	1.38	864A5128	15494
10.6	1285	3.24	866A5228	49300
10.1	1371	1.93	**865A4837**	29181
9.92	1377	1.80	865A5228	29200
9.85	1392	2.71	**866A4837**	49000
9.20	1488	1.15	**864A4937**	12244
9.20	1482	2.82	866A5328	48965
9.07	1515	1.75	**865A4937**	29081
8.99	1517	1.63	865A5328	29166
8.98	1519	1.12	864A5328	17200
8.55	1604	2.35	**866A4937**	48700
8.34	1644	2.69	**866A5037**	48700
8.22	1657	1.03	864A5428	15200
8.07	1705	1.68	**865A5037**	29034
7.89	1736	0.98	**864A5037**	10194
7.43	1829	3.48	**867A5137**	66800
7.31	1880	1.53	**865A5137**	28982
7.24	1892	2.34	**866A5137**	48200
7.18	1901	0.90	**864A5137**	8484
7.14	1902	0.90	864A5528	11700
6.92	1978	2.11	**866A5237**	48136
6.76	2003	3.23	**867A5237**	66700
6.54	2081	2.12	866A6028	41580
6.48	2002	1.24	**865A5237**	28851
6.35	2145	2.97	867A6028	64632
6.24	2183	1.21	865A6028	25710

Nominal Output Rev/Min	Output Torque Nm	Service Factor	Unit Selection	Overhung Load N
6.07	2229	2.90	**867A5337**	66700
6.01	2273	1.84	**866A5337**	47734
5.95	2289	1.93	866A6128	41580
5.87	2336	1.06	**865A5337**	28693
5.77	2360	2.70	867A6128	64632
5.58	2440	1.18	865A6128	24951
5.43	2507	2.54	**867A5437**	66600
5.18	2631	1.68	866A6228	41580
5.10	2672	2.38	**867A5537**	66500
5.02	2711	2.35	867A6228	64632
4.80	2836	1.01	865A6228	24951
4.62	2947	3.60	868A6228	80613
4.57	2983	1.48	866A6328	41580
4.44	3064	2.11	**867A5637**	66400
4.44	3052	3.31	**868A5637**	80900
4.43	3074	2.07	867A6328	64632
4.29	3174	0.91	865A6328	24951
4.27	3189	1.39	**866A6037**	41580
4.15	3286	1.94	**867A6037**	64632
4.14	3291	1.35	866A6428	41580
4.08	3342	3.18	868A6328	80613
4.03	3381	0.85	865A6428	24951
4.02	3391	1.88	867A6428	64632
3.89	3508	1.26	**866A6137**	41580
3.81	3571	2.97	**868A6037**	80613
3.77	3615	1.76	**867A6137**	64632
3.70	3686	2.88	868A6428	80613
3.62	3768	1.18	866A6528	41580
3.51	3884	1.64	867A6528	64632
3.47	3930	2.70	**868A6137**	80613
3.38	4029	1.10	**866A6237**	41580
3.28	4153	1.53	**867A6237**	64632
3.26	4187	1.06	866A6628	41580
3.23	4222	2.52	868A6528	80613
3.11	4377	1.46	867A6628	64632
3.02	4515	2.35	**868A6237**	80613
2.98	4569	0.97	**866A6337**	41580
2.93	4655	2.33	868A6628	80613
2.89	4710	1.35	**867A6337**	64632
2.88	4733	0.94	866A6728	41580
2.75	4951	1.29	867A6728	64632
2.70	5041	0.88	**866A6437**	41580
2.66	5118	2.08	**868A6337**	80613
2.62	5194	1.23	**867A6437**	64632
2.59	5262	2.06	868A6728	80613
2.48	5490	0.81	866A6828	41580
2.41	5646	1.88	**868A6437**	80613
2.38	5739	1.11	867A6828	64632
2.29	5948	1.07	**867A6537**	64632
2.24	6088	1.78	868A6828	80613
2.11	6467	1.64	**868A6537**	80613
2.03	6705	0.95	**867A6637**	64632
1.99	6845	0.93	867A6928	64632
1.91	7131	1.52	**868A6637**	80613
1.88	7277	1.49	868A6928	80613
1.80	7581	0.84	**867A6737**	64632
1.80	7575	1.42	868A7028	80613
1.69	8063	1.34	**868A6737**	80613
1.55	8782	1.22	868A7128	80613
1.46	9348	1.16	**868A6837**	80613
1.30	10478	1.03	868A7228	80613
1.23	11150	0.97	**868A6937**	80613
1.19	11468	0.94	868A7328	80613
1.18	11606	0.93	**868A7037**	80613

2.2 KW MOTOR

Nominal Output Rev/Min	Output Torque Nm	Service Factor	Unit Selection	Overhung Load N
397	51	3.97	802A0936	4526
397	51	1.97	801A0936	3690
397	51	2.32	861A0936	3690
380	53	1.12	860A0936	1380
283	72	1.62	801A1036	3860
283	72	1.89	861A1036	3860
283	72	3.30	802A1036	4718
281	73	0.94	860A1036	1380
262	78	3.00	**802A0945**	4780
262	78	3.76	**862A0945**	7200
262	78	1.49	**801A0945**	3100
262	78	1.73	**861A0945**	2300
257	79	1.53	801A1136	3910
257	79	1.78	861A1136	3910
252	81	3.09	802A1136	4800
247	82	0.88	860A1136	1360
226	90	1.42	801A1236	3970
226	90	1.64	861A1236	3970
225	91	2.89	802A1236	4881
187	109	1.21	**801A1045**	3100
187	109	1.41	**861A1045**	2300
187	109	2.49	**802A1045**	5000
187	110	3.49	**862A1045**	4820
178	114	1.20	801A1436	4000
178	114	1.41	861A1436	4000
177	115	2.51	802A1436	5024
177	115	3.82	862A1436	4843
169	120	1.12	**801A1145**	3100
169	120	1.33	**861A1145**	2300
166	123	2.33	**802A1145**	5070
166	123	3.36	**862A1145**	4890
157	130	1.08	801A1536	4000
157	130	1.30	861A1536	4000
156	130	2.30	802A1536	5095
156	131	3.44	862A1536	4915
151	136	3.49	**803A1145**	7200
149	137	1.02	**801A1245**	2650
149	137	1.22	**861A1245**	2300
148	138	2.14	**802A1245**	5130
148	138	3.00	**862A1245**	4950
134	152	3.36	**803A1245**	7200
131	156	2.00	802A1736	5179
131	156	2.89	862A1736	4998
128	159	0.92	801A1736	4000
128	159	1.13	861A1736	4000
120	171	3.00	**803A1445**	7200
118	173	1.06	**861A1445**	2150
117	175	1.78	**802A1445**	5250
117	175	2.57	**862A1445**	5060
115	176	0.84	801A1836	4000
115	176	1.06	861A1836	4000
114	180	1.79	802A1836	5420
114	180	2.38	862A1836	5016
106	193	3.18	803A1836	7200
103	197	0.97	**861A1545**	2000
103	199	1.61	**802A1545**	5350
103	199	2.27	**862A1545**	5150
101	201	0.97	861A1936	4000
99.4	205	3.72	863A1936	8331
97.7	209	1.58	802A1936	5594
97.7	209	2.16	862A1936	5016
94.3	217	2.74	**803A1545**	7200
91.8	223	2.38	803A1936	7200
89.3	227	0.91	861A2036	3850
87.6	232	3.39	863A2036	8633
87.4	233	1.46	802A2036	5539
87.4	233	1.93	862A2036	5431
86.4	236	1.42	**802A1745**	5540
86.4	237	1.91	**862A1745**	5340
83.2	246	2.48	**803A1745**	7200
82.9	246	3.15	**863A1745**	8620
82.0	249	1.36	802A2136	5598
82.0	249	1.81	862A2136	5497
81.0	250	0.84	861A2136	3640
79.5	256	3.10	863A2136	9020
79.0	259	2.31	803A2036	7200
75.3	271	2.93	**863A1845**	8440

Series M Gearboxes : Motorised selection

Bold print indicates a 6 pole motor is used

Double reduction (see pages 199-200 for dimensions)
Triple reduction (see pages 199-200 for dimensions)
Quadruple reduction (see pages 201-202 for dimensions)

Nominal Output Rev/Min	Output Torque Nm	Service Factor	Unit Selection	Overhung Load N
75.0	272	1.25	**802A1845**	5680
75.0	273	1.57	**862A1845**	5480
70.6	289	2.17	803A2136	7200
69.7	293	2.14	**803A1845**	7200
69.4	293	2.75	863A2236	8833
69.2	294	1.15	802A2236	5764
69.2	295	1.53	862A2236	5567
66.2	308	2.04	803A2236	7200
65.6	311	2.60	**863A1945**	8126
64.8	314	1.08	802A2336	5822
64.8	315	1.43	862A2336	5113
64.5	316	1.07	**802A1945**	5820
64.5	317	1.42	**862A1945**	5610
61.4	331	2.46	863A2336	8092
60.6	337	1.57	**803A1945**	7200
57.8	352	2.33	**863A2045**	7790
57.6	353	0.96	**802A2045**	5920
57.6	354	1.28	**862A2045**	5700
55.9	365	1.72	803A2336	7200
54.1	378	0.90	**802A2145**	5970
54.1	377	1.20	**862A2145**	5750
52.9	384	2.15	863A2536	7680
52.4	389	2.13	**863A2145**	7470
52.3	389	1.61	803A2536	7200
52.2	390	0.87	802A2536	5983
52.2	390	1.16	862A2536	4504
52.1	392	1.53	**803A2045**	7200
51.5	395	3.45	**864A2145**	20000
46.6	438	1.43	**803A2145**	7200
45.8	445	1.89	**863A2245**	6963
45.6	447	1.01	**862A2245**	5060
45.5	447	3.27	**864A2245**	20000
44.4	458	1.84	863A2636	8001
44.3	460	0.98	862A2636	4522
43.7	467	1.34	**803A2245**	7200
43.2	470	3.45	864A2636	20190
42.7	477	0.95	**862A2345**	4450
42.2	483	1.30	803A2636	7200
40.5	500	1.70	863A2736	7430
40.5	502	1.69	**863A2345**	6666
40.4	501	0.90	862A2736	3645
40.3	506	3.05	**864A2345**	20000
39.4	514	3.21	864A2736	20215
36.9	554	1.14	**803A2345**	7200
35.8	567	1.11	803A2736	7200
34.9	582	1.48	**863A2545**	6666
34.5	591	1.06	**803A2545**	7200
33.8	598	1.45	863A2936	7261
33.3	612	2.73	**864A2545**	20000
32.7	623	1.01	803A2936	7200
32.1	632	2.68	864A2936	18821
32.1	635	3.90	865A2936	29615
29.4	690	2.45	864A3036	18617
29.4	687	1.02	863A3036	7502
29.3	693	1.26	**863A2645**	5217
29.1	700	4.09	865A3036	29617
28.5	713	2.39	**864A2645**	17987
27.8	733	0.86	**803A2645**	7200
26.7	758	1.15	**863A2745**	5217
26.0	783	2.18	**864A2745**	17718
25.8	784	2.56	865A3136	29563
25.5	791	1.95	864A3136	19279
24.2	831	0.91	863A4436	5530
23.8	848	3.06	865A4436	29523
23.6	847	1.89	864A4436	18900
23.4	871	2.84	**865A2845**	29500
23.3	871	2.84	865A3236	29546
22.7	884	0.88	863A4536	4630
22.3	907	0.96	**863A2945**	3265
21.6	930	1.78	864A4536	18103
21.4	940	2.81	865A4536	29423
21.2	960	1.78	**864A2945**	16267
21.2	962	2.57	**865A2945**	29500

Nominal Output Rev/Min	Output Torque Nm	Service Factor	Unit Selection	Overhung Load N
20.7	977	2.53	865A3336	29429
19.4	1046	1.63	**864A3045**	15492
19.2	1050	2.73	865A4636	29429
19.2	1062	2.70	**865A3045**	29400
19.1	1051	1.62	864A4636	16927
18.3	1109	3.49	**866A3145**	49500
18.0	1113	3.97	866A4736	49582
17.3	1166	2.46	865A4736	29376
17.0	1188	1.64	**865A3145**	29390
16.9	1186	1.44	864A4736	17742
16.9	1197	1.30	**864A3145**	14699
16.3	1243	3.35	**866A3245**	49400
15.7	1284	2.06	**865A4445**	29200
15.6	1289	2.93	**866A4445**	49200
15.6	1290	1.32	**864A4445**	14606
15.4	1318	1.88	**865A3245**	29250
15.2	1325	2.00	865A4836	29220
15.2	1331	3.13	**866A3345**	49200
14.9	1346	2.81	866A4836	49101
14.2	1409	1.21	**864A4545**	12236
14.1	1426	1.86	**865A4545**	29100
14.1	1433	2.64	**866A4545**	49000
14.0	1436	1.19	864A4936	14328
13.8	1463	1.81	865A4936	29144
13.7	1482	1.64	**865A3345**	28975
13.2	1522	2.90	**866A4645**	48900
13.0	1549	2.44	866A4936	48771
12.7	1595	1.80	**865A4645**	29100
12.6	1587	2.78	866A5036	48771
12.6	1598	1.07	**864A4645**	11076
12.5	1588	4.00	867A5036	66923
12.2	1646	1.74	865A5036	29082
12.0	1676	1.02	864A5036	14531
11.9	1691	2.61	**866A4745**	48600
11.4	1770	1.62	**865A4745**	29000
11.3	1768	3.60	867A5136	66826
11.2	1802	0.95	**864A4745**	9804
11.1	1819	1.58	865A5136	29006
11.0	1828	2.42	866A5136	48360
10.9	1838	0.93	864A5136	12174
10.5	1904	2.19	866A5236	48326
10.3	1936	3.34	867A5236	66726
10.0	2011	1.32	**865A4845**	28800
9.9	2041	1.85	**866A4845**	47635
9.8	2040	1.22	865A5236	28826
9.20	2155	3.00	867A5336	66730
9.11	2196	1.90	866A5336	47855
9.07	2222	1.19	**865A4945**	28700
8.90	2248	1.10	865A5336	28762
8.55	2353	1.61	**866A4945**	46378
8.34	2411	1.83	**866A5045**	46425
8.27	2410	2.64	**867A5045**	66600
8.22	2426	2.62	867A5436	66636
8.07	2500	1.15	**865A5045**	28600
7.73	2585	2.46	867A5536	66536
7.43	2682	2.37	**867A5145**	66531
7.31	2758	1.04	**865A5145**	28500
7.24	2775	1.59	**866A5145**	46625
6.92	2901	1.44	**866A5245**	46450
6.85	2904	3.79	868A5536	80900
6.76	2938	2.20	**867A5245**	66420
6.73	2952	3.43	868A5636	80900
6.72	2957	2.19	867A5636	66442
6.59	3010	3.36	**868A5245**	80900
6.48	2936	0.85	**865A5245**	28300
6.48	3085	1.43	866A6036	41580
6.28	3179	2.00	867A6036	64632
6.09	3265	3.10	**868A5345**	80900
6.07	3269	1.98	**867A5345**	66373
6.01	3334	1.26	**866A5345**	46044
5.89	3393	1.30	866A6136	41580
5.78	3455	3.07	868A6036	80613
5.71	3497	1.82	867A6136	64632
5.43	3677	1.73	**867A5445**	66232
5.26	3802	2.79	868A6136	80613
5.12	3900	1.14	866A6236	41580
5.10	3920	1.63	**867A5545**	66115
5.07	3935	2.80	**868A5445**	80900

Nominal Output Rev/Min	Output Torque Nm	Service Factor	Unit Selection	Overhung Load N
4.97	4018	1.59	867A6236	64632
4.57	4368	2.43	868A6236	80613
4.52	4422	1.00	866A6336	41580
4.52	4406	2.50	**868A5545**	80900
4.44	4494	1.44	**867A5645**	65962
4.44	4476	2.26	**868A5645**	80865
4.39	4556	1.40	867A6336	64632
4.27	4677	0.95	**866A6045**	41580
4.15	4820	1.32	**867A6045**	64632
4.10	4877	0.91	866A6436	41580
4.03	4953	2.15	868A6336	80613
3.98	5025	1.27	867A6436	64632
3.89	5145	0.86	**866A6145**	41580
3.81	5238	2.03	**868A6045**	80613
3.77	5302	1.20	**867A6145**	64632
3.66	5463	1.95	868A6436	80613
3.58	5584	0.79	866A6536	41580
3.47	5757	1.11	867A6536	64632
3.47	5764	1.84	**868A6145**	80613
3.28	6091	1.05	**867A6245**	64632
3.19	6258	1.70	868A6536	80613
3.08	6487	0.98	867A6636	64632
3.02	6622	1.61	**868A6245**	80613
2.90	6899	1.57	868A6636	80613
2.89	6908	0.92	**867A6345**	64632
2.73	7338	0.87	867A6736	64632
2.66	7507	1.42	**868A6345**	80613
2.62	7618	0.84	**867A6445**	64632
2.56	7799	1.39	868A6736	80613
2.41	8281	1.29	**868A6445**	80613
2.21	9022	1.20	868A6836	80613
2.11	9485	1.12	**868A6545**	80613
1.91	10459	1.04	**868A6645**	80613
1.86	10785	1.01	868A6936	80613
1.78	11227	0.96	868A7036	80613
1.69	11826	0.92	**868A6745**	80613
1.54	13016	0.83	868A7136	80613
1.46	13711	0.79	**868A6845**	80613

3.0 KW MOTOR

Nominal Output Rev/Min	Output Torque Nm	Service Factor	Unit Selection	Overhung Load N
396	70	2.90	802A0938	4476
396	70	1.44	801A0938	3100
396	70	1.70	861A0938	2300
282	98	1.18	801A1038	3100
282	98	1.38	861A1038	2300
282	99	2.41	802A1038	4648
282	99	3.86	862A1038	4395
261	106	2.89	**863A0953**	8020
256	109	1.12	801A1138	3100
256	108	1.30	861A1138	2300
251	110	2.26	802A1138	4720
251	111	3.69	862A1138	4450
228	123	3.86	803A1138	7200
225	123	1.04	801A1238	3100
225	123	1.20	861A1238	2300
224	124	2.11	802A1238	4791
224	124	3.33	862A1238	4504
203	137	3.73	803A1238	7200
188	147	2.89	**863A1053**	8470
181	154	3.33	803A1438	7200
178	156	0.88	801A1438	2600
178	157	1.03	861A1438	2300
176	158	1.84	802A1438	4911
176	158	2.80	862A1438	4733
168	166	2.89	**863A1153**	8620
156	178	0.79	801A1538	2300
156	178	0.95	861A1538	2200
156	179	1.68	802A1538	4968
156	179	2.52	862A1538	4790
153	182	2.89	**863A1253**	8750
142	196	3.04	803A1538	7200
130	214	1.46	802A1738	5026

Series M Gearboxes : Motorised selection

Nominal Output Rev/Min	Output Torque Nm	Service Factor	Unit Selection	Overhung Load N
130	214	2.11	862A1738	4850
127	218	0.83	861A1738	2000
126	222	2.73	803A1738	7200
125	222	3.27	863A1738	7698
117	238	2.89	**863A1453**	9090
114	244	3.03	863A1838	7607
113	246	1.31	802A1838	5202
113	246	1.74	862A1838	4855
105	264	2.33	803A1838	7200
103	271	2.75	**863A1553**	9240
99.0	281	2.72	863A1938	7670
97.4	286	1.16	802A1938	5343
97.4	286	1.58	862A1938	4762
91.5	305	1.74	803A1938	7200
87.3	318	2.48	863A2038	7956
87.1	319	1.07	802A2038	5110
87.1	319	1.42	862A2038	5204
84.6	328	2.36	**863A1753**	7950
81.7	341	1.00	802A2138	5140
81.7	340	1.33	862A2138	5254
79.2	351	2.27	863A2138	8480
78.7	354	1.69	803A2038	7200
77.8	356	3.82	864A2138	18200
76.9	362	2.20	**863A1853**	7683
70.3	395	1.59	803A2138	7200
69.1	401	2.01	863A2238	8190
68.9	403	1.12	862A2238	5221
68.7	403	3.63	864A2238	18800
66.9	415	1.95	**863A1953**	7218
66.0	421	1.49	803A2238	7200
64.6	431	1.05	862A2338	4500
63.8	434	3.74	**864A1953**	19300
61.1	453	1.80	863A2338	7040
60.9	458	3.37	864A2338	19500
59.0	470	1.74	**863A2053**	6718
57.5	481	2.95	**864A2053**	19900
55.7	499	1.26	803A2338	7200
53.5	519	1.59	**863A2153**	6243
52.7	525	1.58	863A2538	6400
52.6	527	2.58	**864A2153**	18460
52.1	533	1.18	803A2538	7200
52.0	534	0.85	862A2538	3280
50.2	550	2.88	864A2538	20000
46.7	594	1.41	**863A2253**	5491
46.5	597	2.45	**864A2253**	18233
44.2	626	1.35	863A2638	6898
43.1	643	2.53	864A2638	18667
42.0	661	0.95	803A2638	7200
41.3	670	1.27	**863A2353**	5050
41.2	675	2.28	**864A2353**	18181
40.4	685	1.24	863A2738	6012
39.8	701	4.09	865A2738	29600
39.2	704	2.35	864A2738	18492
36.9	754	3.50	**865A2453**	29500
35.7	777	1.11	**863A2553**	5050
35.6	776	0.81	803A2738	7200
35.3	787	3.15	865A2838	29600
34.0	817	2.05	**864A2553**	18181
33.7	818	1.06	863A2938	5750
33.4	833	3.17	**865A2553**	29500
32.0	864	1.96	864A2938	17475
32.0	869	2.85	865A2938	29492
29.9	926	0.94	**863A2653**	2898
29.7	937	3.06	**865A2653**	29500
29.3	945	1.79	864A3038	17036
29.1	951	1.79	**864A2653**	15687
28.9	959	2.99	865A3038	29478
27.6	1005	3.86	866A3138	46600
27.3	1012	0.86	**863A2753**	2898
26.9	1034	2.77	**865A2753**	29400
26.5	1045	1.63	**864A2753**	15111
25.7	1073	1.87	865A3138	29407
25.5	1082	1.43	864A3138	18755
24.6	1118	3.73	866A3238	48400
23.9	1163	2.13	**865A2853**	28790
23.7	1160	2.24	865A4438	29335
23.6	1162	3.25	866A4438	29500
23.5	1159	1.39	864A4438	18100

Nominal Output Rev/Min	Output Torque Nm	Service Factor	Unit Selection	Overhung Load N
23.2	1192	2.08	865A3238	29370
22.9	1202	3.47	866A3338	49452
22.5	1236	3.37	**866A2953**	49400
21.6	1281	1.33	**864A2953**	13552
21.6	1284	1.93	**865A2953**	29303
21.5	1273	1.30	864A4538	16724
21.4	1286	2.06	865A4538	29235
21.2	1290	2.93	866A4538	29500
20.7	1337	1.85	865A3338	29234
20.0	1382	3.09	**866A3053**	49100
20.0	1372	3.22	866A4638	29500
19.8	1397	1.22	**864A3053**	12214
19.6	1418	2.02	**865A3053**	29067
19.1	1436	2.00	865A4638	29194
19.0	1439	1.19	864A4638	14693
18.7	1481	2.62	**866A3153**	48845
18.0	1523	2.90	866A4738	48921
17.4	1586	1.23	**865A3153**	29150
17.2	1596	1.80	865A4738	29120
17.2	1598	0.97	**864A3153**	11775
16.9	1622	1.05	864A4738	16100
16.6	1660	2.51	**866A3253**	48681
15.9	1723	0.99	**864A4453**	10683
15.7	1760	1.41	**865A3253**	28995
15.7	1742	3.56	867A4838	66900
15.5	1778	2.34	**866A3353**	48436
15.1	1813	1.46	865A4838	28944
15.0	1842	3.37	**867A4553**	66800
14.9	1842	2.05	866A4838	48286
14.6	1882	0.91	**864A4553**	7953
14.1	1940	3.20	867A4938	66700
14.0	1978	1.23	**865A3353**	28520
13.9	1965	0.87	864A4938	11200
13.7	2002	1.32	865A4938	28813
13.5	2029	3.13	**867A4653**	66700
12.9	2119	1.78	866A4938	47825
12.6	2172	2.04	866A5038	47825
12.5	2173	2.93	867A5038	66738
12.2	2252	1.27	865A5038	28779
12.0	2287	2.78	**867A4753**	66600
11.2	2419	2.63	867A5138	66611
11.0	2489	1.15	865A5138	28648
10.9	2502	1.77	866A5138	47287
10.6	2580	2.41	**867A4853**	66600
10.5	2606	1.60	866A5238	47214
10.2	2649	2.44	867A5238	66511
10.0	2714	3.73	868A5238	80900
9.78	2792	0.89	865A5238	28400
9.50	2870	2.16	**867A4953**	66500
9.19	2947	3.43	868A5338	80900
9.17	2949	2.20	867A5338	66484
9.07	3006	1.39	866A5338	46586
8.86	3076	0.81	865A5338	28300
8.45	3218	1.98	**867A5053**	66328
8.20	3320	1.92	867A5438	66345
7.70	3537	1.80	867A5538	66245
7.69	3533	3.12	**868A5053**	80900
7.66	3551	3.10	868A5438	80900
7.59	3581	1.78	**867A5153**	66225
7.10	3833	2.87	**868A5153**	80900
6.91	3923	1.65	**867A5253**	66100
6.83	3974	2.77	868A5538	80900
6.73	4019	2.52	**868A5253**	80900
6.70	4047	1.60	867A5638	66103
6.70	4039	2.51	868A5638	80900
6.45	4222	1.05	866A6038	41580
6.26	4350	1.46	867A6038	64632
6.22	4360	2.32	**868A5353**	80900
6.20	4365	1.48	**867A5353**	66000
5.87	4643	0.95	866A6138	41580
5.76	4728	2.25	868A6038	80613
5.69	4786	1.33	867A6138	64632
5.54	4910	1.30	**867A5453**	65812
5.24	5203	2.04	868A6138	80613
5.21	5234	1.22	**867A5553**	65675
5.18	5255	2.10	**868A5453**	80900
5.11	5337	0.83	866A6238	41580
4.95	5499	1.16	867A6238	64632

Nominal Output Rev/Min	Output Torque Nm	Service Factor	Unit Selection	Overhung Load N
4.62	5882	1.87	**868A5553**	80854
4.56	5977	1.78	868A6238	80613
4.53	6000	1.08	**867A5653**	65462
4.53	5976	1.69	**868A5653**	80825
4.37	6235	1.02	867A6338	64632
4.02	6778	1.57	868A6338	80613
3.96	6877	0.93	867A6438	64632
3.65	7476	1.42	868A6438	80613
3.46	7878	0.81	867A6538	64632
3.18	8563	1.24	868A6538	80613
2.89	9440	1.15	868A6638	80613
2.56	10673	1.02	868A6738	80613
2.20	12346	0.88	868A6838	80613

4.0 KW MOTOR

Nominal Output Rev/Min	Output Torque Nm	Service Factor	Unit Selection	Overhung Load N
402	92	2.21	802A0946	4413
402	92	3.18	862A0946	4160
401	92	1.09	801A0946	3100
401	92	1.29	861A0946	2300
392	94	3.26	863A0946	7490
324	114	3.18	803A1046	7200
286	129	0.90	801A1046	2650
286	129	1.05	861A1046	2300
286	130	1.83	802A1046	4561
286	130	2.93	862A1046	4345
283	131	3.26	863A1046	7780
261	142	2.17	**863A0955**	7888
260	143	0.85	801A1146	2400
260	142	0.99	861A1146	2300
255	145	1.72	802A1146	4620
255	146	2.81	862A1146	4394
252	147	3.26	863A1146	7930
231	161	2.93	803A1146	7200
229	161	3.26	863A1246	8050
229	161	0.92	861A1246	2100
227	163	1.61	802A1246	4678
227	163	2.54	862A1246	4438
206	180	2.84	803A1246	7200
188	197	2.17	**863A1055**	8290
183	202	2.54	803A1446	7200
179	207	1.40	802A1446	4770
179	208	2.13	862A1446	4596
175	211	3.11	863A1446	8370
168	221	2.17	**863A1155**	8420
158	235	1.28	802A1546	4809
158	236	1.91	862A1546	4634
154	241	2.86	863A1546	8510
153	243	2.17	**863A1255**	8522
144	257	2.31	803A1546	7200
132	281	1.11	802A1746	4835
132	281	1.61	862A1746	4666
127	292	2.08	803A1746	7200
127	292	2.49	863A1746	7128
117	318	2.17	**863A1455**	8334
115	321	2.31	863A1846	6943
115	321	3.43	**864A1455**	16700
115	323	1.00	802A1846	4930
115	323	1.32	862A1846	4653
107	347	1.77	803A1846	7200
103	361	2.06	**863A1555**	8232
103	362	3.43	**864A1555**	17000
100	369	2.07	863A1946	6844
98.8	376	1.20	862A1946	4445
92.8	401	1.32	803A1946	7200
88.6	418	1.89	863A2046	7110
88.3	420	1.08	862A2046	4920
86.3	427	3.33	864A2046	17400
84.6	438	1.77	**863A1755**	7114
83.7	441	3.40	**864A1755**	17500
82.8	448	1.01	862A2146	4950
80.3	461	1.73	863A2146	7804
79.8	465	1.29	803A2046	7200
78.9	468	2.91	864A2146	16986

Series M Gearboxes : Motorised selection

Bold print indicates a 6 pole motor is used

Double reduction (see pages 199-200 for dimensions)
Triple reduction (see pages 199-200 for dimensions)
Quadruple reduction (see pages 201-202 for dimensions)

Nominal Output Rev/Min	Output Torque Nm	Service Factor	Unit Selection	Overhung Load N
76.9	482	1.65	**863A1855**	6738
74.3	497	3.10	**864A1855**	18100
71.3	520	1.21	803A2146	7200
70.1	527	1.53	863A2246	7385
69.9	530	0.85	862A2246	47900
69.7	530	2.76	864A2246	17340
66.9	553	1.46	**863A1955**	6083
66.9	554	1.13	803A2246	7200
63.8	579	2.80	**864A1955**	17670
62.0	595	1.37	863A2346	5724
61.8	602	2.56	864A2346	17752
59.0	627	1.31	**863A2055**	5379
57.5	642	2.22	**864A2055**	17998
56.5	657	0.96	803A2346	7200
55.3	672	3.53	865A2446	27400
53.5	693	1.20	**863A2155**	4710
53.5	691	1.20	863A2546	4800
52.9	700	0.90	803A2546	7200
52.6	703	1.94	**864A2155**	16537
52.1	716	3.58	**865A2155**	27900
50.9	723	2.19	864A2546	17785
50.1	744	3.23	865A2546	28200
46.7	791	1.06	**863A2255**	3650
46.6	800	3.58	**865A2255**	29000
46.5	796	1.84	**864A2255**	16025
44.8	823	1.03	863A2646	5520
44.6	835	3.43	865A2646	29300
43.7	845	1.92	864A2646	16763
42.0	887	3.23	**865A2355**	29500
41.3	894	0.95	**863A2355**	3030
41.2	901	1.71	**864A2355**	15909
41.0	900	0.95	863A2746	4240
40.4	922	3.11	865A2746	28783
39.8	926	1.79	864A2746	16338
36.9	1006	2.63	**865A2455**	28425
35.8	1034	2.39	865A2846	29111
35.7	1036	0.83	**863A2555**	3030
34.0	1090	1.54	**864A2555**	15909
33.7	1095	3.80	866A2946	43600
33.4	1110	2.38	**865A2555**	28275
32.5	1136	1.49	864A2946	15792
32.4	1142	2.17	865A2946	29338
32.0	1160	3.25	**866A2555**	44300
31.2	1184	3.73	**866A2655**	44700
30.1	1226	3.48	866A3046	45100
29.7	1242	1.37	864A3046	15060
29.7	1249	2.29	**865A2655**	28250
29.4	1260	2.27	865A3046	29305
29.1	1269	1.34	**864A2655**	12812
28.0	1321	2.93	866A3146	46066
27.1	1367	3.23	**866A2755**	46600
26.9	1378	2.08	**865A2755**	27958
26.5	1393	1.22	**864A2755**	11852
26.1	1411	1.42	865A3146	29212
25.9	1422	2.93	**866A2855**	47300
25.8	1423	1.09	864A3146	18100
24.9	1470	2.84	866A3246	47800
24.1	1525	1.70	865A4446	29100
23.9	1528	2.47	866A4446	29411
23.9	1524	1.06	864A4446	17100
23.9	1551	1.60	**865A2855**	27904
23.6	1567	1.58	865A3246	29151
23.2	1581	2.64	866A3346	48813
22.5	1648	2.53	**866A2955**	48566
22.4	1632	3.80	867A4546	66900
21.8	1674	0.99	864A4546	15000
21.7	1691	1.57	865A4546	29000
21.6	1709	1.00	**864A2955**	10159
21.6	1712	1.45	**865A2955**	29058
21.5	1697	2.23	866A4546	29411
21.0	1758	1.41	865A3346	28990
20.2	1803	2.45	866A4646	29411

Nominal Output Rev/Min	Output Torque Nm	Service Factor	Unit Selection	Overhung Load N
20.2	1801	3.53	867A4646	66800
20.0	1842	2.32	**866A3055**	47958
19.8	1863	0.92	**864A3055**	8116
19.6	1891	1.52	**865A3055**	28652
19.4	1888	1.52	865A4646	28900
19.3	1891	0.90	864A4646	11900
18.7	1974	1.96	**866A3155**	48027
18.2	2003	2.21	866A4746	48094
17.9	2030	3.13	867A4746	66841
17.5	2098	1.37	865A4746	28800
17.4	2114	0.92	**865A3155**	28850
16.9	2175	2.85	**867A4455**	66700
16.6	2213	1.88	**866A3255**	47784
15.9	2295	1.65	**866A4455**	49200
15.9	2291	2.71	867A4846	66800
15.7	2347	1.06	**865A3255**	28677
15.5	2370	1.76	**866A3355**	47481
15.3	2384	1.11	865A4846	28600
15.1	2422	1.56	866A4846	47267
15.0	2455	2.53	**867A4555**	66741
14.4	2552	1.48	**866A4555**	49000
14.3	2551	2.44	867A4946	66611
14.0	2638	0.92	**865A3355**	27952
13.9	2632	1.01	865A4946	28400
13.5	2710	1.63	**866A4655**	48900
13.5	2705	2.35	**867A4655**	66616
13.1	2786	1.36	866A4946	46641
12.8	2856	1.55	866A5046	46641
12.7	2858	2.23	867A5046	66507
12.4	2961	0.97	865A5046	28400
12.1	3010	1.47	**866A4755**	46358
12.0	3049	2.09	**867A4755**	66516
11.5	3142	3.51	868A5046	80900
11.4	3181	2.00	867A5146	66342
11.2	3273	0.88	865A5146	28200
11.1	3289	1.35	866A5146	45946
10.7	3408	3.23	868A5146	80900
10.6	3426	1.22	866A5246	45824
10.6	3440	1.81	**867A4855**	66437
10.4	3483	1.86	867A5246	66242
10.2	3581	3.10	**868A4855**	80900
10.1	3568	2.84	868A5246	80900
10.1	3634	1.04	**866A4855**	44125
9.50	3827	1.62	**867A4955**	66325
9.40	3861	2.88	**868A4955**	80900
9.32	3874	2.61	868A5346	80900
9.30	3878	1.67	867A5346	66176
9.20	3952	1.06	866A5346	45000
8.73	4189	0.90	**866A4955**	40408
8.52	4292	1.03	**866A5055**	40575
8.45	4291	1.48	**867A5055**	65988
8.31	4365	1.46	867A5446	65981
7.81	4650	1.37	867A5546	65881
7.77	4669	2.36	868A5446	80900
7.69	4711	2.34	**868A5055**	80900
7.59	4774	1.33	**867A5155**	65841
7.39	4941	0.90	**866A5155**	42575
7.10	5110	2.16	**868A5155**	80900
7.07	5164	0.81	**866A5255**	42113
6.92	5225	2.11	868A5546	80900
6.91	5231	1.24	**867A5255**	65700
6.80	5311	1.91	868A5646	80900
6.79	5321	1.22	867A5646	65678
6.73	5358	1.89	**868A5255**	80900
6.54	5551	0.80	866A6046	41580
6.35	5720	1.12	867A6046	64632
6.22	5813	1.74	**868A5355**	80900
6.20	5820	1.11	**867A5355**	65533
5.84	6217	1.71	868A6046	80613
5.77	6292	1.01	867A6146	64632
5.54	6546	0.97	**867A5455**	65287
5.31	6841	1.55	868A6146	80613
5.21	6978	0.91	**867A5555**	65125
5.18	7006	1.57	**868A5455**	80900
5.02	7230	0.88	867A6246	64632
4.62	7859	1.35	868A6246	80613
4.62	7843	1.41	**868A5555**	80798
4.53	8000	0.81	**867A5655**	64837

Nominal Output Rev/Min	Output Torque Nm	Service Factor	Unit Selection	Overhung Load N
4.53	7968	1.27	**868A5655**	80775
4.08	8912	1.19	868A6346	80613
3.70	9829	1.08	868A6446	80613
3.23	11259	0.95	868A6546	80613
2.93	12412	0.88	868A6646	80613

5.5 KW MOTOR

Nominal Output Rev/Min	Output Torque Nm	Service Factor	Unit Selection	Overhung Load N
407	125	1.63	802A0954	4320
407	125	2.35	862A0954	4160
397	128	2.40	863A0954	7393
329	154	2.35	803A1054	7200
290	176	1.35	802A1054	4430
290	177	2.17	862A1054	4270
287	177	2.40	863A1054	7647
261	195	1.58	**863A0957**	7690
261	194	2.50	**864A0957**	14328
258	197	1.27	802A1154	4470
258	198	2.07	862A1154	4310
255	199	2.40	863A1154	7709
234	219	2.17	803A1154	7200
232	219	2.40	863A1254	7732
230	222	1.19	802A1254	4510
230	221	1.87	862A1254	4340
209	244	2.09	803A1254	7200
188	270	1.58	**863A1057**	8020
186	274	1.87	803A1454	7200
184	276	2.50	**864A1057**	15164
181	281	1.03	802A1454	4560
181	282	1.57	862A1454	4390
178	286	2.29	863A1454	7722
175	290	3.79	864A1454	15336
168	304	1.58	**863A1157**	8120
166	307	2.50	**864A1157**	15442
160	318	0.94	802A1554	4570
160	320	1.41	862A1554	4400
156	327	2.11	863A1554	7667
156	325	3.76	864A1554	15648
153	334	1.58	**863A1257**	8180
149	342	2.50	**864A1257**	15614
146	349	1.71	803A1554	7200
134	381	1.19	862A1754	4390
129	396	1.53	803A1754	7200
129	397	1.84	863A1754	6273
127	400	3.28	864A1754	16175
117	436	1.70	863A1854	5948
117	437	1.58	**863A1457**	7200
116	438	0.98	862A1854	4350
115	442	2.50	**864A1457**	15800
113	449	2.99	864A1854	16393
108	471	1.31	803A1854	7200
103	496	1.50	**863A1557**	6720
103	498	2.50	**864A1557**	15821
102	500	1.53	863A1954	5604
100	510	0.89	862A1954	3970
97.1	524	2.70	864A1954	16821
94.1	543	0.98	803A1954	7200
89.8	566	1.39	863A2054	5840
87.5	579	2.46	864A2054	15526
84.6	602	1.29	**863A1757**	5860
83.7	607	2.48	**864A1757**	15777
81.4	626	1.27	863A2154	6791
80.9	631	0.95	803A2054	7200
80.0	635	2.15	864A2154	15166
76.9	663	1.20	**863A1857**	5320
74.3	683	2.26	**864A1857**	15980
72.3	705	0.89	803A2154	7200
71.1	715	1.13	863A2254	6178
70.9	720	3.79	865A2254	25256
70.7	718	2.04	864A2254	15150
67.8	752	0.84	803A2254	7200
66.9	761	1.07	**863A1957**	4379
66.1	775	3.70	**865A1957**	25700

Series M Gearboxes : Motorised selection

Nominal Output Rev/Min	Output Torque Nm	Service Factor	Unit Selection	Overhung Load N
63.8	798	3.47	865A2354	26068
63.8	796	2.04	**864A1957**	15225
62.9	807	1.01	863A2354	3751
62.6	817	1.89	864A2354	15130
59.0	862	0.95	**863A2057**	3369
57.9	886	2.86	**865A2057**	25816
57.5	882	1.61	**864A2057**	15146
56.1	912	2.60	865A2454	26609
54.2	937	0.89	863A2554	2400
53.5	952	0.87	**863A2157**	2409
52.6	966	1.41	**864A2157**	13651
52.1	985	2.60	**865A2157**	26386
51.7	981	1.62	864A2554	14463
50.8	1008	2.38	865A2554	27177
48.7	1045	3.61	866A2554	38534
46.6	1100	2.60	**865A2257**	27367
46.5	1094	1.34	**864A2257**	12713
45.2	1132	2.53	865A2654	28168
44.3	1146	1.42	864A2654	13907
42.0	1219	2.35	**865A2357**	27621
41.2	1235	3.57	866A2754	40553
41.2	1238	1.25	**864A2357**	12500
40.9	1250	2.29	865A2754	27558
40.3	1255	1.32	864A2754	13107
39.4	1291	3.23	866A2854	41131
36.9	1383	1.91	**865A2457**	26812
36.3	1402	1.77	865A2854	28377
34.2	1485	2.81	866A2954	42931
34.0	1498	1.12	**864A2557**	12500
33.4	1527	1.73	**865A2557**	26437
32.9	1541	1.10	864A2954	13268
32.9	1549	1.60	865A2954	29107
32.0	1595	2.37	**866A2557**	42700
31.2	1628	2.71	**866A2657**	43141
30.5	1662	2.57	866A3054	44336
30.1	1685	1.01	864A3054	12097
29.8	1709	1.68	865A3054	29046
29.7	1717	1.67	**865A2657**	26375
29.1	1744	0.98	**864A2657**	8500
28.4	1791	2.17	866A3154	45266
27.1	1880	2.35	**866A2757**	44541
27.0	1868	3.40	**867A2757**	66700
26.9	1895	1.51	**865A2757**	25795
26.5	1916	0.89	**864A2757**	6963
26.5	1913	1.05	865A3154	28919
25.9	1956	2.13	**866A2857**	45717
25.7	1954	3.17	867A4454	66701
25.3	1993	2.09	866A3254	46900
24.6	2042	3.17	**867A2857**	66700
24.3	2072	1.82	866A4454	29277
24.1	2094	2.84	**867A4157**	66700
23.9	2125	1.17	865A3254	28821
23.9	2133	1.16	**865A2857**	26575
23.5	2144	1.95	866A3354	47854
22.8	2213	2.81	867A4554	66848
22.5	2265	1.84	**866A2957**	47316
22.1	2278	2.84	**867A2957**	66600
21.8	2301	1.64	866A4554	29277
21.7	2313	2.75	**867A4257**	66600
21.6	2354	1.05	**865A2957**	28690
21.2	2384	1.04	865A3354	28624
20.5	2446	1.81	866A4654	29277
20.5	2443	2.60	867A4654	66731
20.0	2533	1.69	**866A3057**	46245
19.6	2600	1.10	**865A3057**	28030
19.2	2606	2.44	**867A4357**	66500
18.7	2715	1.43	**866A3157**	46800
18.5	2716	1.63	866A4754	46853
18.2	2753	2.31	867A4754	66754
16.9	2991	2.08	**867A4457**	66637
16.8	2960	3.72	868A4754	80900
16.6	3043	1.37	**866A3257**	46437
16.2	3099	3.59	**868A4457**	80900
16.1	3107	2.00	867A4854	66650
15.9	3156	1.20	**866A4457**	49200
15.5	3259	1.28	**866A3357**	46050
15.5	3225	3.45	868A4854	80900
15.3	3284	1.15	866A4854	45738

Nominal Output Rev/Min	Output Torque Nm	Service Factor	Unit Selection	Overhung Load N
15.0	3376	1.84	**867A4557**	66654
14.7	3430	3.24	**868A4557**	80900
14.5	3459	1.80	867A4954	66477
14.4	3508	1.08	**866A4557**	49000
14.3	3505	3.17	868A4954	80900
13.5	3726	1.19	**866A4657**	48900
13.5	3719	1.71	**867A4657**	66491
13.3	3779	1.00	866A4954	44866
13.0	3873	1.14	866A5054	44866
12.9	3876	1.64	867A5054	66161
12.2	4088	2.70	**868A4657**	80900
12.1	4139	1.07	**866A4757**	44490
12.0	4193	1.52	**867A4757**	66391
11.7	4261	2.59	868A5054	80900
11.5	4314	1.48	867A5154	65938
11.2	4461	0.99	866A5154	43934
11.1	4515	2.44	**868A4757**	80900
10.8	4622	2.38	868A5154	80900
10.8	4647	0.90	866A5254	43739
10.6	4730	1.32	**867A4857**	66193
10.5	4724	1.37	867A5254	65838
10.2	4839	2.09	868A5254	80900
10.2	4923	2.26	**868A4857**	80900
9.50	5262	1.18	**867A4957**	66062
9.45	5254	1.93	868A5354	80900
9.43	5259	1.23	867A5354	65715
9.40	5309	2.10	**868A4957**	80900
8.45	5899	1.08	**867A5057**	65479
8.43	5919	1.08	867A5454	65436
7.92	6307	1.01	867A5554	65336
7.87	6331	1.74	868A5454	80900
7.69	6478	1.70	**868A5057**	80900
7.59	6565	0.97	**867A5157**	65266
7.10	7027	1.57	**868A5157**	80900
7.02	7086	1.56	868A5554	80900
6.91	7192	0.90	**867A5257**	65100
6.89	7216	0.90	867A5654	65042
6.89	7202	1.41	868A5654	80900
6.73	7367	1.38	**868A5257**	80900
6.22	7993	1.27	**868A5357**	80900
6.20	8002	0.81	**867A5357**	65833
5.92	8431	1.26	868A6054	80613
5.38	9277	1.15	868A6154	80613
5.18	9634	1.15	**868A5457**	80900
4.69	10658	1.00	868A6254	80613
4.62	10784	1.02	**868A5557**	80713
4.53	10957	0.93	**868A5657**	80700
4.13	12086	0.88	868A6354	80613

7.5 KW MOTOR

Nominal Output Rev/Min	Output Torque Nm	Service Factor	Unit Selection	Overhung Load N
396	175	1.76	863A0956	7265
396	174	2.77	864A0956	13458
286	242	1.76	863A1056	7470
279	248	2.77	864A1056	13997
264	262	1.85	**864A0965**	14100
254	272	1.76	863A1156	7415
251	275	2.77	864A1156	14177
231	300	1.76	863A1256	7310
226	307	2.77	864A1256	14357
186	373	1.85	**864A1065**	14850
177	392	1.68	863A1456	6860
175	397	2.77	864A1456	14612
167	414	1.85	**864A1165**	15100
156	448	1.54	863A1556	6545
156	445	2.75	864A1556	14670
151	461	1.85	**864A1265**	15100
128	543	1.34	863A1756	5134
127	547	2.40	864A1756	14656
118	592	3.99	**865A1465**	22500
117	596	1.25	863A1856	4621
114	611	3.97	865A1856	22600
113	614	2.19	864A1856	14523

Nominal Output Rev/Min	Output Torque Nm	Service Factor	Unit Selection	Overhung Load N
106	661	3.71	**865A1565**	23000
101	684	1.12	863A1956	3952
100	698	3.63	865A1956	23200
96.7	717	1.97	864A1956	14395
94.5	739	3.06	**865A1665**	23300
89.5	775	1.02	863A2056	4148
87.7	798	2.77	865A2056	23212
87.2	792	1.80	864A2056	13028
82.9	843	2.78	**865A1765**	22983
81.1	856	0.93	863A2156	5440
79.7	869	1.57	864A2156	12740
78.9	882	2.53	865A2156	23415
70.8	979	0.83	863A2256	4570
70.7	986	2.77	865A2256	24134
70.4	983	1.49	864A2256	12230
63.6	1091	2.53	865A2356	24702
62.4	1118	1.38	864A2356	11635
59.1	1181	3.20	**866A2065**	35800
58.1	1191	1.20	**864A2065**	11344
55.9	1241	3.04	866A2456	36300
55.9	1247	1.90	865A2456	25554
53.2	1308	2.89	**866A2165**	36900
53.1	1304	1.05	**864A2165**	9803
51.5	1342	1.18	864A2556	10034
50.6	1380	1.74	865A2556	25813
48.5	1430	2.64	866A2556	37839
47.3	1465	3.02	866A2656	38185
47.0	1476	0.99	**864A2265**	8297
45.0	1549	1.85	865A2656	26659
44.1	1568	1.04	864A2656	10200
41.6	1671	0.93	**864A2365**	7954
41.1	1690	2.61	866A2756	39480
41.0	1677	3.79	867A2756	66500
40.8	1710	1.68	865A2756	25925
40.2	1718	0.97	864A2756	8800
39.3	1767	2.36	866A2856	40372
37.3	1843	3.51	867A2856	66800
36.2	1919	1.29	865A2856	27400
34.3	2022	0.83	**864A2565**	7954
34.1	2032	2.05	866A2956	42040
33.5	2046	3.16	867A2956	66700
32.8	2120	1.17	865A2956	28800
30.4	2274	1.88	866A3056	43318
29.7	2339	1.23	865A3056	28700
28.3	2451	1.58	866A3156	44200
27.2	2558	1.12	**865A2765**	22912
25.6	2674	2.32	867A4456	66670
25.2	2727	1.53	866A3256	45700
24.5	2793	3.76	868A4456	66400
24.2	2835	1.33	866A4456	29100
24.1	2878	0.86	**865A2865**	24802
23.5	2933	1.42	866A3356	46576
22.7	3057	1.37	**866A2965**	45650
22.7	3029	2.05	867A4556	66779
22.2	3076	3.48	868A4556	66400
21.7	3148	1.20	866A4556	29100
20.5	3346	1.32	866A4656	29100
20.4	3342	1.90	867A4656	66640
20.2	3418	1.25	**866A3065**	43962
18.8	3664	1.06	**866A3165**	45163
18.5	3687	2.99	868A4656	66400
18.4	3716	1.19	866A4756	45200
18.1	3767	1.69	867A4756	66637
16.8	4106	1.02	**866A3265**	44642
16.8	4050	2.72	868A4756	80900
16.0	4251	1.46	867A4856	66450
15.6	4399	0.95	**866A3365**	44140
15.4	4413	2.52	868A4856	80900
15.3	4494	0.84	866A4856	43700
14.4	4733	1.31	867A4956	66300
14.2	4796	2.32	868A4956	80900
12.9	5299	0.84	866A5056	42500
12.8	5303	1.20	867A5056	65700
11.7	5831	1.89	868A5056	80900
11.5	5903	1.08	867A5156	65400
10.8	6324	1.74	868A5156	80900
10.5	6464	1.00	867A5256	65300
10.2	6622	1.53	868A5256	80900

Series M Gearboxes : Motorised selection

Bold print indicates a 6 pole motor is used

Double reduction (see pages 199-200 for dimensions)
Triple reduction (see pages 199-200 for dimensions)
Quadruple reduction (see pages 201-202 for dimensions)

Nominal Output Rev/Min	Output Torque Nm	Service Factor	Unit Selection	Overhung Load N
9.42	7189	1.41	868A5356	80900
9.40	7196	0.90	867A5356	65100
7.85	8663	1.27	868A5456	80900
7.00	9695	1.14	868A5556	80900
6.87	9855	1.03	868A5656	80900
6.28	10787	0.94	**868A5365**	80900
5.23	13002	0.85	**868A5465**	80900

11.0 KW MOTOR

Nominal Output Rev/Min	Output Torque Nm	Service Factor	Unit Selection	Overhung Load N
400	253	1.21	863A0966	7040
400	253	1.91	864A0966	13197
289	352	1.21	863A1066	7160
282	360	1.91	864A1066	13625
257	395	1.21	863A1166	6900
254	400	1.91	864A1166	13768
234	435	1.21	863A1266	6570
228	445	1.91	864A1266	13910
199	518	3.41	865A1366	20209
179	569	1.16	863A1466	5350
179	571	3.65	865A1466	20624
176	577	1.91	864A1466	13346
160	640	3.40	865A1566	21072
157	650	1.06	863A1566	4580
157	646	1.89	864A1566	12957
143	717	2.75	865A1666	20720
130	788	0.93	863A1766	3140
128	794	1.65	864A1766	11998
126	817	2.50	865A1766	21211
118	865	0.86	863A1866	2300
115	887	2.73	865A1866	21464
114	892	1.51	864A1866	11250
101	1013	2.50	865A1966	21675
97.7	1041	1.36	864A1966	10251
91.6	1115	3.39	**866A1667**	32000
89.5	1139	3.31	866A2066	32215
88.6	1158	1.91	865A2066	21760
88.1	1150	1.24	864A2066	8656
81.0	1263	2.99	**866A1767**	32600
80.5	1266	2.98	866A2166	32896
80.5	1261	1.08	864A2166	8493
79.8	1280	1.75	865A2166	21602
75.7	1344	3.29	866A2266	33324
71.4	1431	1.91	865A2266	22170
71.2	1427	1.03	864A2266	7120
68.2	1495	2.95	866A2366	32667
64.5	1575	1.03	**864A1967**	6260
64.3	1584	1.75	865A2366	22312
63.0	1622	0.95	864A2366	5517
59.1	1732	2.18	**866A2067**	33980
58.1	1747	0.82	**864A2067**	4690
57.8	1756	3.53	867A2466	60039
56.5	1802	2.10	866A2466	35310
56.5	1811	1.31	865A2466	23709
53.2	1918	1.97	**866A2167**	34597
52.0	1948	0.82	864A2566	2284
51.9	1956	3.18	867A2566	61744
51.2	2003	1.20	865A2566	23427
50.0	2043	2.16	**866A2267**	35273
49.0	2076	1.82	866A2566	36623
47.8	2127	2.08	866A2666	37054
47.1	2177	1.32	**865A2267**	21381
46.1	2194	2.90	867A2666	63271
45.5	2249	1.28	865A2666	24028
45.0	2265	1.95	**866A2367**	35797
41.5	2454	1.80	866A2766	37602
41.4	2435	2.61	867A2766	65208
41.2	2483	1.16	865A2766	23066
39.7	2565	1.63	866A2866	39044
37.7	2675	2.42	867A2866	65228
37.3	2703	3.68	868A2866	80924
36.8	2740	2.02	867A4166	50560
36.5	2786	0.89	865A2866	25688
35.6	2818	3.46	868A4166	66432
34.4	2950	1.42	866A2966	40481
34.4	2925	3.42	868A2966	80900
33.8	2970	2.18	867A2966	66000
33.8	3022	0.88	**865A2567**	19700
33.3	3016	2.05	867A4266	50560
30.7	3302	1.30	866A3066	41536
30.5	3279	3.36	868A4266	66432
30.4	3324	1.92	**867A2667**	64772
29.4	3406	1.86	867A4366	50560
28.6	3559	1.09	866A3166	42333
27.3	3697	1.72	**867A2767**	64702
26.9	3718	2.96	868A4366	66432
25.8	3882	1.60	867A4466	66616
25.5	3959	1.06	866A3266	43600
24.9	4042	1.60	**867A2867**	63983
24.7	4054	2.59	868A4466	66275
24.4	4115	0.92	866A4466	28788
23.7	4258	0.98	866A3366	44339
22.9	4397	1.42	867A4566	66658
22.4	4465	2.40	868A4566	66275
22.3	4508	1.44	**867A2967**	65900
22.0	4570	0.83	866A4566	28788
20.7	4858	0.91	866A4666	28788
20.6	4852	1.31	867A4666	66481
20.2	5014	0.85	**866A3067**	39966
18.7	5352	2.06	868A4666	66206
18.3	5468	1.17	867A4766	66433
17.0	5879	1.88	868A4766	80900
16.2	6172	1.01	867A4866	66100
15.6	6406	1.74	868A4866	80900
14.6	6872	0.91	867A4966	65988
14.4	6962	1.60	868A4966	80900
11.8	8465	1.30	868A5066	80900
10.9	9181	1.20	868A5166	80900
10.3	9613	1.06	868A5266	80900
9.52	10437	0.97	868A5366	80900
7.77	12821	0.86	**868A5067**	80900

15.0KW MOTOR

Nominal Output Rev/Min	Output Torque Nm	Service Factor	Unit Selection	Overhung Load N
656	213	3.10	**865A0174**	15400
476	294	2.65	**865A0274**	17100
444	315	2.70	865A0668	17400
443	315	3.49	**866A0374**	23700
425	330	2.50	**865A0374**	17700
398	346	1.40	864A0968	12900
397	352	2.49	865A0768	18000
390	358	3.49	**866A0474**	24700
379	370	2.36	**865A0474**	18200
327	426	3.10	**865A0574**	18600
324	430	3.49	**866A0574**	26000
320	438	3.29	865A0968	18700
299	468	3.36	**866A0674**	26100
294	478	2.05	**865A0674**	18700
289	482	3.49	865A1068	18900
281	492	1.40	864A1068	13200
277	506	3.11	**866A0774**	26300
263	534	1.90	**865A0774**	18884
258	542	3.29	865A1168	19200
253	547	1.40	864A1168	13300
237	589	2.65	**865A0874**	19305
232	599	3.49	**866A0874**	27100
227	609	1.40	864A1268	13400
221	631	2.70	865A1268	19500
213	653	3.49	**866A0974**	27300
212	660	2.50	**865A0974**	19663
198	708	2.49	865A1368	19772
196	708	3.49	**866A1074**	27700
181	771	3.49	**866A1174**	28100
178	782	2.67	865A1468	20227
176	789	1.40	864A1468	11900
159	875	2.48	865A1568	20381
157	884	1.39	864A1568	11000
144	966	3.49	**866A1274**	29200
143	981	2.01	865A1668	19486
138	1008	3.66	866A1668	29400
131	1067	1.90	**865A1374**	20033
128	1087	1.21	864A1768	8959
125	1118	1.83	865A1768	19966
122	1140	3.31	866A1768	30000
117	1188	3.28	866A1868	30200
115	1214	2.00	865A1868	20266
113	1221	1.10	864A1868	7509
106	1323	1.86	**865A1574**	20033
103	1342	3.02	866A1968	30954
101	1386	1.83	865A1968	19933
97.4	1424	1.00	864A1968	5299
94.5	1478	1.53	**865A1674**	19166
89.2	1559	2.42	866A2068	31354
88.3	1585	1.40	865A2068	20202
87.8	1573	0.91	864A2068	3659
82.9	1686	1.39	**865A1774**	18045
81.4	1708	3.64	867A2168	55200
80.3	1733	2.18	866A2168	31312
79.5	1752	1.28	865A2168	19528
78.3	1772	3.59	**867A1874**	55600
76.2	1832	1.50	**865A1874**	18329
75.5	1839	2.40	866A2268	31628
73.2	1889	3.37	867A2268	56100
71.2	1958	1.40	865A2268	19926
69.1	2008	3.14	**867A1974**	56600
67.9	2046	2.16	866A2368	30688
66.8	2092	1.37	**865A1974**	17921
65.0	2128	2.99	867A2368	56772
64.1	2168	1.28	865A2368	19580
58.5	2392	1.06	**865A2074**	17688
57.6	2403	2.58	867A2468	58681
56.3	2466	1.53	866A2468	34179
56.3	2478	0.96	865A2468	21600
52.6	2658	0.97	**865A2174**	16802
51.9	2662	3.75	868A2568	79400
51.7	2676	2.32	867A2568	60368
51.7	2676	2.32	867A2568	60368
51.0	2741	0.88	865A2568	20700
48.9	2841	1.33	866A2568	35232
48.9	2841	1.33	866A2568	35232
47.6	2910	1.52	866A2668	35762
47.6	2910	1.52	866A2668	35762
47.1	2969	0.97	**865A2274**	17028
47.1	2969	0.97	**865A2274**	17028
46.0	3002	2.12	867A2668	61752
46.0	3002	2.12	867A2668	61752
42.5	3255	3.29	868A2668	80900
42.4	3291	0.87	**865A2374**	15725
41.3	3358	1.32	866A2768	35456
41.3	3331	1.91	867A2768	63733
39.5	3509	1.19	866A2868	37527
39.2	3516	3.08	868A2768	80900
37.6	3661	1.77	867A2868	63433
37.2	3699	2.69	868A2868	80827
36.7	3749	1.48	867A4168	49920
35.4	3856	2.53	868A4168	66304
34.3	4037	1.04	866A2968	38700
34.3	4002	2.50	868A2968	80900
33.7	4064	1.59	867A2968	65200
33.2	4126	1.50	867A4268	49920
31.5	4394	1.01	**866A2674**	33272
30.6	4518	0.95	866A3068	39500
30.4	4532	1.41	**867A2674**	62684
30.4	4487	2.46	868A4268	66304
29.3	4661	1.36	867A4368	49920
28.1	4918	2.18	**868A2674**	79109
27.4	5075	0.87	**866A2774**	31505

Series M Gearboxes : Motorised selection

Nominal Output Rev/Min	Output Torque Nm	Service Factor	Unit Selection	Overhung Load N
27.3	5041	1.26	**867A2774**	63248
26.8	5088	2.17	868A4368	66304
26.0	5309	2.04	**868A2774**	78890
25.7	5312	1.17	867A4468	66554
24.9	5512	1.18	**867A2874**	62008
24.7	5548	1.90	868A4468	66133
24.6	5574	1.82	**868A2874**	80800
22.8	6016	1.04	867A4568	66520
22.7	6046	1.68	**868A2974**	80823
22.4	6110	1.76	868A4568	66133
22.3	6148	1.06	**867A2974**	65390
20.6	6639	0.96	867A4668	66300
18.6	7323	1.51	868A4668	65986
18.2	7482	0.85	867A4768	66200
16.9	8045	1.37	868A4768	80900
15.5	8766	1.27	868A4868	80900
14.3	9526	1.17	868A4968	80900
11.7	11582	0.95	868A5068	80900
10.8	12562	0.88	868A5168	80900

18.5 KW MOTOR

Nominal Output Rev/Min	Output Torque Nm	Service Factor	Unit Selection	Overhung Load N
676	254	2.85	**866A0175**	20700
659	262	2.53	**865A0175**	15306
572	302	2.51	865A0476	16006
484	355	2.85	**866A0275**	23000
479	361	2.16	**865A0275**	16936
445	387	2.85	**866A0375**	23560
444	389	2.19	865A0676	17283
427	405	2.04	**865A0375**	17513
397	435	2.02	865A0776	17871
392	440	2.85	**866A0475**	24536
381	454	1.92	**865A0475**	18013
358	481	2.83	865A0876	18271
336	511	3.55	**867A0575**	44500
326	527	2.85	**866A0575**	25813
320	540	2.67	865A0976	18560
306	562	3.55	**867A0675**	45000
301	574	2.74	**866A0675**	25866
289	594	2.83	865A1076	18760
279	620	2.54	**866A0775**	26066
268	638	3.55	**867A0775**	45700
258	668	2.67	865A1176	19025
242	709	3.55	**867A0875**	46300
233	735	2.85	**866A0875**	26843
221	778	2.19	865A1276	19255
221	779	3.55	**867A0975**	46800
215	802	2.85	**866A0975**	27043
202	851	3.80	866A1376	27300
198	873	2.02	865A1376	19390
193	887	3.55	**867A1075**	47600
184	931	3.58	866A1476	27700
178	964	2.16	865A1476	19692
176	974	3.55	**867A1175**	48400
171	1004	3.41	866A1576	28166
159	1080	2.01	865A1576	19777
157	1096	3.55	**867A1275**	49300
143	1210	1.63	865A1676	18406
142	1214	3.55	**867A1375**	50100
138	1243	2.97	866A1676	29096
125	1367	3.55	**867A1475**	51200
125	1378	1.49	865A1776	18877
122	1406	2.69	866A1776	29661
117	1466	2.66	866A1876	29861
115	1497	1.62	865A1876	19031
113	1517	3.55	**867A1575**	52000
106	1623	1.51	**865A1575**	18648
104	1638	3.84	867A1976	52700
103	1655	2.45	866A1976	30551
101	1709	1.49	865A1976	18408
98.6	1745	3.55	**867A1675**	53100
95.0	1814	1.25	**865A1675**	17237
91.8	1867	3.33	867A2076	53508
89.2	1923	1.97	866A2076	30602
88.3	1955	1.14	865A2076	18651
87.1	1978	3.01	**867A1775**	54200
83.3	2069	1.14	**865A1775**	15741
81.4	2106	2.95	867A2176	54351
80.3	2137	1.77	866A2176	29926
79.5	2160	1.04	865A2176	17714
78.7	2174	2.93	**867A1875**	54733
76.5	2248	1.22	**865A1875**	15982
75.5	2268	1.95	866A2276	30244
73.2	2330	2.73	867A2276	55137
71.2	2415	1.14	865A2276	17963
69.5	2464	2.56	**867A1975**	55550
67.9	2523	1.75	866A2376	28955
67.1	2566	1.12	**865A1975**	15055
65.0	2625	2.42	867A2376	55689
64.1	2674	1.04	865A2376	17190
61.1	2797	3.87	868A2376	75200
61.1	2809	2.21	**867A2075**	56896
58.8	2935	0.87	**865A2075**	14694
57.6	2964	2.10	867A2476	57493
56.3	3041	1.24	866A2476	33189
56.2	3042	3.49	868A2476	77000
52.9	3261	0.79	**865A2175**	13271
51.9	3283	3.04	868A2576	78603
51.7	3300	1.88	867A2576	59164
48.9	3504	1.08	866A2576	34026
47.6	3589	1.23	866A2676	34631
46.0	3703	1.72	867A2676	60423
45.2	3789	1.17	**866A2375**	29364
42.5	4015	2.67	868A2676	79736
41.3	4141	1.07	866A2776	33578
41.3	4109	1.55	867A2776	62442
39.5	4328	0.97	866A2876	36200
39.2	4337	2.50	868A2776	79675
37.6	4515	1.44	867A2876	61862
37.5	4578	0.83	**866A2475**	31417
37.2	4562	2.18	868A2876	80742
36.7	4624	1.20	867A4176	49360
35.4	4756	2.05	868A4176	66192
34.3	4935	2.03	868A2976	80900
33.7	5012	1.29	867A2976	64500
33.2	5089	1.22	867A4276	49360
31.7	5391	0.82	**866A2675**	29636
30.6	5561	1.15	**867A2675**	60857
30.4	5533	1.99	868A4276	66192
29.3	5748	1.10	867A4376	49360
27.5	6185	1.03	**867A2775**	61977
26.8	6275	1.76	868A4376	66192
25.7	6552	0.95	867A4476	66500
25.0	6763	0.96	**867A2875**	60279
24.7	6842	1.54	868A4476	66008
22.8	7420	0.84	867A4576	66400
22.5	7543	0.86	**867A2975**	64945
22.4	7536	1.42	868A4576	66008
18.6	9032	1.22	868A4676	65793
16.9	9922	1.11	868A4776	80900
15.5	10811	1.03	868A4876	80900
14.3	11748	0.95	868A4976	80900
12.4	13538	0.82	**868A4675**	80900

22.0 KW MOTOR

Nominal Output Rev/Min	Output Torque Nm	Service Factor	Unit Selection	Overhung Load N
1016	201	3.60	866A0178	18100
991	206	2.79	865A0178	13447
727	281	3.60	866A0278	20200
720	285	2.38	865A0278	14860
669	306	3.60	866A0378	20600
659	311	2.13	**865A0184**	15213
642	319	2.25	865A0378	15413
589	348	3.60	866A0478	21400
572	359	2.11	865A0478	15913
493	413	2.79	865A0578	16813
490	415	3.60	866A0578	22800
484	422	2.40	**866A0284**	22847
479	429	1.82	**865A0284**	16773
452	455	3.46	866A0678	23300
444	463	1.84	865A0678	17166
427	481	1.72	**865A0384**	17326
419	490	3.21	866A0778	23800
397	517	1.70	865A0778	17743
392	523	2.40	**866A0484**	24373
381	539	1.62	**865A0484**	17826
358	572	2.38	865A0878	18143
351	582	3.60	866A0878	25300
336	608	2.98	**867A0584**	44375
322	635	3.60	866A0978	25600
320	643	2.25	865A0978	18420
306	668	2.98	**867A0684**	44865
297	688	3.60	866A1078	25900
289	706	2.38	865A1078	18620
273	749	3.60	866A1178	26200
268	759	2.98	**867A0784**	45546
258	794	2.25	865A1178	18850
242	843	2.98	**867A0884**	46127
233	874	2.40	**866A0884**	26586
221	925	1.84	865A1278	19020
221	927	2.98	**867A0984**	46617
218	938	3.35	866A1278	26800
202	1012	3.20	866A1378	27102
198	1039	1.70	865A1378	19009
193	1055	2.98	**867A1084**	47389
184	1107	3.01	866A1478	27502
178	1147	1.82	865A1478	19257
176	1159	2.98	**867A1184**	48169
171	1193	2.87	866A1578	27933
159	1284	1.70	865A1578	19172
157	1303	2.98	**867A1284**	49031
143	1439	1.37	865A1678	17327
142	1444	2.98	**867A1384**	49812
138	1478	2.49	866A1678	28793
131	1564	3.80	867A1778	50400
125	1625	2.98	**867A1484**	50854
125	1639	1.25	865A1778	17788
122	1672	2.26	866A1778	29323
118	1722	3.69	867A1878	51300
117	1743	2.24	866A1878	29523
115	1780	1.36	865A1878	17895
113	1803	2.98	**867A1584**	51558
104	1948	3.23	867A1978	52028
103	1968	2.06	866A1978	30248
101	2033	1.25	865A1978	16884
98.6	2075	2.98	**867A1684**	52476
95.0	2157	1.05	**865A1684**	15308
91.8	2220	2.80	867A2078	52817
89.2	2287	1.65	866A2078	29848
88.3	2325	0.96	865A2078	17200
83.3	2461	0.96	**865A1784**	13436
81.4	2505	2.48	867A2178	53502
80.3	2542	1.49	866A2178	28540
79.5	2569	0.87	865A2178	15899
76.5	2674	1.03	**865A1884**	13634
75.5	2697	1.64	866A2278	28660
73.2	2771	2.30	867A2278	54175
71.2	2872	0.96	865A2278	15999
67.9	3001	1.47	866A2378	27223
67.4	3009	3.53	868A2278	73600
67.1	3052	0.94	**865A1984**	12190
65.0	3121	2.04	867A2378	54606
64.1	3180	0.87	865A2378	14800

Series M Gearboxes : Motorised selection

Bold print indicates a 6 pole motor is used

Double reduction (see pages 199-200 for dimensions)
Triple reduction (see pages 199-200 for dimensions)
Quadruple reduction (see pages 201-202 for dimensions)

Nominal Output Rev/Min	Output Torque Nm	Service Factor	Unit Selection	Overhung Load N
61.1	3326	3.25	868A2378	74382
57.6	3525	1.76	867A2478	56306
56.3	3616	1.05	866A2478	32200
56.2	3618	2.93	868A2478	75965
51.9	3905	2.56	868A2578	77807
51.7	3925	1.58	867A2578	57960
48.9	4167	0.91	866A2578	32800
47.6	4268	1.04	866A2678	33500
46.0	4403	1.45	867A2678	59094
42.5	4774	2.25	868A2678	78572
41.3	4924	0.90	866A2778	31700
41.3	4886	1.30	867A2778	61151
39.2	5157	2.10	868A2778	78450
37.6	5369	1.21	867A2878	60291
37.2	5425	1.84	868A2878	80657
36.7	5498	1.01	867A4178	48800
35.4	5656	1.73	868A4178	66080
34.3	5869	1.71	868A2978	80900
33.7	5960	1.09	867A2978	63800
33.2	6052	1.02	867A4278	48800
30.6	6613	0.97	**867A2684**	59030
30.4	6580	1.68	868A4278	66080
29.3	6836	0.93	867A4378	48800
28.3	7176	1.50	**868A2684**	75975
27.5	7356	0.87	**867A2784**	60706
26.8	7462	1.48	868A4378	66080
26.1	7747	1.40	**868A2784**	75375
25.0	8042	0.81	**867A2884**	58551
24.7	8133	1.25	**868A2884**	80706
24.7	8136	1.30	868A4478	65884
22.8	8822	1.15	**868A2984**	80752
22.4	8961	1.20	868A4578	65884
18.6	10741	1.03	868A4678	65600
16.9	11799	0.94	868A4778	80900
15.5	12856	0.87	868A4878	80900

30.0 KW MOTOR

Nominal Output Rev/Min	Output Torque Nm	Service Factor	Unit Selection	Overhung Load N
1019	273	2.65	866A0188	17995
994	280	2.05	865A0188	13326
730	382	2.65	866A0288	19960
722	387	1.76	865A0288	14700
671	416	2.65	866A0388	20460
666	420	1.58	**865A0191**	15000
644	434	1.65	865A0388	15200
591	473	2.65	866A0488	21260
574	487	1.56	865A0488	15700
506	550	3.30	867A0588	39200
495	562	2.05	865A0588	16600
491	564	2.65	866A0588	22626
484	580	1.35	**865A0291**	16400
461	605	3.30	867A0688	40200
453	618	2.55	866A0688	23056
445	629	1.36	865A0688	16900
432	649	1.27	**865A0391**	16900
420	667	2.36	866A0788	23556
404	687	3.30	867A0788	41800
399	703	1.25	865A0788	17450
396	706	1.78	**866A0491**	24000
384	728	1.20	**865A0491**	17400
365	763	3.30	867A0888	43000
360	777	1.76	865A0888	17850
352	791	2.65	866A0888	25056
341	813	3.10	**868A0591**	56900
333	839	3.30	867A0988	44100
332	839	1.58	**865A0591**	17800
323	863	2.65	866A0988	25356
321	873	1.65	865A0988	18100
303	917	3.10	**868A0691**	58400
298	941	1.04	**865A0691**	17600
298	935	2.65	866A1088	25621
292	954	3.30	867A1088	44800
290	960	1.76	865A1088	18300
281	996	1.58	**866A0791**	25300
274	1018	2.65	866A1188	25886
267	1051	0.97	**865A0791**	17700
265	1048	3.30	867A1188	45300
259	1079	1.65	865A1188	18450
258	1075	3.10	**868A0791**	59600
244	1139	3.10	**868A0891**	60000
241	1161	1.35	**865A0891**	18200
237	1179	3.30	867A1288	45800
236	1180	1.78	**866A0891**	26000
222	1258	1.36	865A1288	18450
219	1275	2.47	866A1288	26417
217	1281	3.10	**868A0991**	60800
215	1300	1.27	**865A0991**	18400
214	1306	3.30	867A1388	46300
202	1375	2.35	866A1388	26649
199	1411	1.25	865A1388	18136
189	1470	3.30	867A1488	47100
185	1504	2.22	866A1488	27049
185	1504	3.10	**868A1091**	62000
179	1558	1.34	865A1488	18263
171	1622	2.11	866A1588	27400
171	1628	3.30	867A1588	47800
164	1691	3.10	**868A1191**	63200
160	1745	1.25	865A1588	17790
150	1849	3.10	**868A1291**	64200
149	1875	3.30	867A1688	48800
143	1956	1.01	865A1688	14859
139	2009	1.84	866A1688	28100
135	2053	3.10	**868A1391**	65300
131	2125	2.80	867A1788	49517
126	2228	0.92	865A1788	15300
123	2272	1.66	866A1788	28550
120	2331	1.02	**865A1491**	15700
119	2340	2.72	867A1888	50288
118	2369	1.65	866A1888	28750
115	2419	1.01	865A1888	15300
115	2423	1.60	**866A1591**	28300
114	2443	3.10	**868A1491**	67100
107	2605	0.95	**865A1591**	14100
105	2648	2.38	867A1988	50461
104	2675	1.52	866A1988	29227
102	2711	3.10	**868A1591**	68200
101	2763	0.92	865A1988	13400
97.2	2850	3.65	868A1988	68600
96.0	2911	0.78	**865A1691**	10900
93.0	2995	1.26	**866A1691**	28700
92.1	3018	2.06	867A2088	51237
89.5	3108	1.22	866A2088	28127
89.5	3099	3.59	868A2088	69600
88.0	3175	1.88	**867A1791**	51584
81.7	3404	1.83	867A2188	51562
81.2	3414	3.26	868A2188	70600
80.5	3454	1.10	866A2188	25372
79.5	3490	1.82	**867A1891**	51887
75.7	3666	1.21	866A2288	25268
73.5	3766	1.69	867A2288	51975
70.2	3955	1.60	**867A1991**	52100
68.2	4078	1.09	866A2388	23264
67.6	4090	2.60	868A2288	71941
65.2	4242	1.50	867A2388	52132
61.7	4509	1.38	**867A2091**	52612
61.3	4520	2.39	868A2388	72513
60.0	4651	0.82	**866A2091**	24100
57.8	4790	1.30	867A2488	53590
56.4	4917	2.16	868A2488	73600
54.7	5078	1.23	**867A2191**	52868
52.1	5306	1.88	868A2588	75987
51.9	5333	1.17	867A2588	55208
49.2	5626	1.13	**867A2291**	53775
46.1	5984	1.07	867A2688	56057
42.6	6488	1.65	868A2688	75912
41.4	6640	0.96	867A2788	58200
39.3	7009	1.55	868A2788	75650
37.7	7296	0.89	867A2888	56700
37.3	7372	1.35	868A2888	80463
35.6	7686	1.27	868A4188	65824
34.4	7976	1.26	868A2988	80900
30.5	8943	1.24	868A4288	65824
28.6	9686	1.11	**868A2691**	72393
26.9	10141	1.09	868A4388	65824
26.4	10456	1.04	**868A2791**	71356
25.0	10978	0.93	**868A2891**	80600
24.7	11057	0.95	868A4488	65600
23.1	11908	0.85	**868A2991**	80671
22.4	12178	0.88	868A4588	65600
20.4	13345	0.83	**868A4291**	64700

37.0 KW MOTOR

Nominal Output Rev/Min	Output Torque Nm	Service Factor	Unit Selection	Overhung Load N
1023	336	2.15	866A0194	17904
997	345	1.67	865A0194	13220
732	470	2.15	866A0294	19839
724	475	1.43	865A0294	14560
673	512	2.15	866A0394	20339
646	534	1.35	865A0394	15023
593	581	2.15	866A0494	21139
576	599	1.27	865A0494	15513
511	669	3.77	868A0594	50300
508	676	2.68	867A0594	39071
497	690	1.67	865A0594	16413
493	693	2.15	866A0594	22473
463	743	2.68	867A0694	40071
455	759	2.07	866A0694	22843
454	754	3.77	868A0694	52100
447	773	1.10	865A0694	16666
421	819	1.92	866A0794	23343
405	844	2.68	867A0794	41648
400	863	1.02	865A0794	17193
386	884	3.77	868A0794	54600
366	937	2.68	867A0894	42825
366	937	3.77	868A0894	55400
361	955	1.43	865A0894	17593
353	972	2.15	866A0894	24843
341	1002	2.52	**868A0592**	56704
334	1031	2.68	867A0994	43913
325	1054	3.77	868A0994	57400
325	1060	2.15	866A0994	25143
322	1073	1.35	865A0994	17820
309	1113	1.79	**867A0692**	44290
303	1129	2.52	**868A0692**	58176
299	1149	2.15	866A1094	25378
293	1173	2.68	867A1094	44590
291	1180	1.43	865A1094	18020
277	1237	3.77	868A1094	58800
275	1251	2.15	866A1194	25613
266	1288	2.68	867A1194	45066
259	1327	1.35	865A1194	18100
258	1324	2.52	**868A0792**	59320
246	1391	3.77	868A1194	59600
238	1449	2.68	867A1294	45543
225	1521	3.77	868A1294	60200
223	1543	1.79	**867A0992**	45836
223	1546	1.10	865A1294	17960
219	1567	2.01	866A1294	26082
214	1606	2.68	867A1394	46020
203	1690	1.92	866A1394	26252
203	1689	3.77	868A1394	60900
199	1735	1.02	865A1394	17372
190	1807	2.68	867A1494	46773
186	1849	1.81	866A1494	26652
185	1853	2.52	**868A1092**	61608
179	1915	1.09	865A1494	17393
172	1994	1.72	866A1594	26933
171	2002	2.68	867A1594	47368
170	2010	3.77	868A1494	62400

Series M Gearboxes : Motorised selection

Nominal Output Rev/Min	Output Torque Nm	Service Factor	Unit Selection	Overhung Load N
164	2083	2.52	**868A1192**	62780
161	2145	1.02	865A1594	16581
159	2170	1.79	**867A1292**	47880
153	2230	3.77	868A1594	63400
149	2304	2.68	867A1694	48181
147	2336	3.77	868A1694	63900
144	2405	0.82	865A1694	12700
143	2405	1.79	**867A1392**	48579
139	2470	1.50	866A1694	27493
135	2529	2.52	**868A1392**	64768
132	2613	2.28	867A1794	48745
129	2650	3.77	868A1794	65200
127	2707	1.79	**867A1492**	49375
123	2793	1.35	866A1794	27873
119	2876	2.21	867A1894	49402
118	2911	1.34	866A1894	28073
114	2997	1.79	**867A1592**	49668
111	3066	3.33	868A1894	66700
105	3254	1.94	867A1994	49098
104	3288	1.24	866A1994	28421
99.6	3450	1.79	**867A1692**	49805
97.5	3503	2.97	868A1994	67981
92.4	3709	1.68	867A2094	49855
89.8	3820	0.99	866A2094	26621
89.8	3809	2.92	868A2094	68981
88.0	3912	1.52	**867A1792**	49993
86.2	3968	2.52	**868A1792**	69288
82.0	4184	1.49	867A2194	49865
81.4	4197	2.65	868A2194	69783
80.8	4245	0.89	866A2194	22600
79.5	4307	1.48	**867A1892**	50155
76.0	4506	0.98	866A2294	22300
73.9	4591	2.23	**868A1892**	70620
73.7	4629	1.38	867A2294	50050
70.2	4873	1.30	**867A1992**	50000
68.4	5013	0.88	866A2394	19800
67.8	5027	2.11	868A2294	70489
65.4	5214	1.22	867A2394	49967
65.1	5245	1.99	**868A1992**	71327
61.7	5554	1.12	**867A2092**	50005
61.5	5556	1.95	868A2394	70879
60.0	5704	1.95	**868A2092**	72900
58.0	5888	1.06	867A2494	51215
56.6	6043	1.76	868A2494	71531
54.4	6285	1.77	**868A2192**	74046
52.2	6522	1.53	868A2594	74395
52.0	6556	0.95	867A2594	52800
49.2	6931	0.92	**867A2292**	50450
46.3	7356	0.87	867A2694	53400
43.7	7807	0.82	**867A2392**	50204
42.8	7975	1.35	868A2694	73585
39.5	8615	1.26	868A2794	73200
37.4	9061	1.10	868A2894	80293
35.7	9447	1.04	868A4194	65600
34.5	9804	1.02	868A2994	80900
30.6	10992	1.01	868A4294	65600
28.6	11943	0.90	**868A2692**	69259
27.0	12464	0.89	868A4394	65600
26.4	12900	0.84	**868A2792**	67840

45.0 KW MOTOR

Nominal Output Rev/Min	Output Torque Nm	Service Factor	Unit Selection	Overhung Load N
1023	408	1.77	866A0195	17800
997	419	1.37	865A0195	13100
732	571	1.77	866A0295	19700
724	578	1.18	865A0295	14400
673	622	1.77	866A0395	20200
646	649	1.11	865A0395	14800
593	707	1.77	866A0495	21000
576	729	1.04	865A0495	15300
511	814	3.10	868A0595	50294
508	822	2.21	867A0595	38925
497	839	1.37	865A0595	16200
493	843	1.77	866A0595	22300
463	904	2.21	867A0695	39925
455	924	1.70	866A0695	22600
454	917	3.10	868A0695	51979
447	940	0.91	865A0695	16400
421	996	1.58	866A0795	23100
405	1026	2.21	867A0795	41475
400	1050	0.84	865A0795	16900
386	1075	3.10	868A0795	54449
366	1140	2.21	867A0895	42625
366	1140	3.10	868A0895	55249
361	1161	1.18	865A0895	17300
353	1182	1.77	866A0895	24600
341	1218	2.07	**868A0593**	56480
334	1254	2.21	867A0995	43700
325	1282	3.10	868A0995	57218
325	1290	1.77	866A0995	24900
322	1305	1.11	865A0995	17500
309	1353	1.48	**867A0693**	43983
303	1373	2.07	**868A0693**	57920
299	1397	1.77	866A1095	25100
293	1426	2.21	867A1095	44350
291	1435	1.18	865A1095	17700
277	1505	3.10	868A1095	58588
275	1522	1.77	866A1195	25300
266	1567	2.21	867A1195	44800
259	1614	1.11	865A1195	17700
258	1610	2.07	**868A0793**	59000
246	1692	3.10	868A1195	59358
238	1762	2.21	867A1295	45250
225	1850	3.10	868A1295	59943
223	1877	1.48	**867A0993**	45420
223	1880	0.91	865A1295	17400
219	1905	1.65	866A1295	25700
214	1953	2.21	867A1395	45700
203	2056	1.58	866A1395	25800
203	2054	3.10	868A1395	60628
199	2110	0.84	865A1395	16500
190	2198	2.21	867A1495	46400
186	2249	1.49	866A1495	26200
185	2253	2.07	**868A1093**	61160
179	2329	0.90	865A1495	16400
172	2425	1.42	866A1595	26400
171	2434	2.21	867A1595	46875
170	2444	3.10	868A1495	62052
164	2534	2.07	**868A1193**	62300
161	2609	0.84	865A1595	15200
159	2639	1.48	**867A1293**	47267
153	2712	3.10	868A1595	63022
149	2802	2.21	867A1695	47475
147	2842	3.10	868A1695	63507
139	3004	1.23	866A1695	26800
135	3075	2.07	**868A1393**	64160
132	3177	1.87	867A1795	47863
129	3223	3.10	868A1795	64762
127	3292	1.48	**867A1493**	48586
123	3397	1.11	866A1795	27100
119	3498	1.82	867A1895	48391
118	3541	1.10	866A1895	27300
114	3645	1.48	**867A1593**	48660
111	3729	2.74	868A1895	66171
105	3958	1.59	867A1995	47540
104	3999	1.02	866A1995	27500
99.6	4196	1.48	**867A1693**	48380
97.5	4260	2.45	868A1995	67275
92.4	4511	1.38	867A2095	48275

Nominal Output Rev/Min	Output Torque Nm	Service Factor	Unit Selection	Overhung Load N
89.8	4646	0.82	866A2095	24900
89.8	4632	2.40	868A2095	68275
88.0	4758	1.25	**867A1793**	48173
86.2	4826	2.07	**868A1793**	68360
82.0	5089	1.22	867A2195	47925
81.4	5104	2.18	868A2195	68850
79.5	5238	1.22	**867A1893**	48175
73.9	5584	1.83	**868A1893**	69500
73.7	5629	1.13	867A2295	47850
70.2	5927	1.07	**867A1993**	47600
67.8	6114	1.74	868A2295	68830
65.4	6341	1.01	867A2395	47493
65.1	6379	1.64	**868A1993**	69848
61.7	6755	0.92	**867A2093**	47025
61.5	6758	1.60	868A2395	69020
60.0	6937	1.61	**868A2093**	71566
58.0	7161	0.87	867A2495	48500
56.6	7350	1.45	868A2495	69167
54.4	7643	1.46	**868A2193**	72336
52.2	7932	1.26	868A2595	72575
42.8	9700	1.11	868A2695	70925
39.5	10477	1.04	868A2795	70400
37.4	11021	0.91	868A2895	80200

Series M Gearboxes : Motorised selection

Bold print indicates a 6 pole motor is used

Double reduction (see pages 199-200 for dimensions)
Triple reduction (see pages 199-200 for dimensions)
Quadruple reduction (see pages 201-202 for dimensions)

55.0 KW MOTOR

Nominal Output Rev/Min	Output Torque Nm	Service Factor	Unit Selection	Overhung Load N
511	995	2.54	868A0596	50062
508	1005	1.81	867A0596	38741
463	1105	1.81	867A0696	39741
454	1121	2.54	868A0696	51828
405	1255	1.81	867A0796	41258
386	1314	2.54	868A0796	54260
366	1393	1.81	867A0896	42375
366	1393	2.54	868A0896	55060
341	1489	1.70	**868A0597**	56200
334	1532	1.81	867A0996	43433
325	1567	2.54	868A0996	56992
309	1654	1.21	**867A0697**	43600
303	1678	1.70	**868A0697**	57600
293	1743	1.81	867A1096	44050
277	1839	2.54	868A1096	58324
266	1915	1.81	867A1196	44466
258	1968	1.70	**868A0797**	58600
246	2068	2.54	868A1196	59056
238	2154	1.81	867A1296	44883
225	2261	2.54	868A1296	59622
223	2294	1.21	**867A0997**	44900
214	2387	1.81	867A1396	45300
203	2510	2.54	868A1396	60288
190	2687	1.81	867A1496	45933
185	2754	1.70	**868A1097**	60600
171	2975	1.81	867A1596	46258
170	2988	2.54	868A1496	61618
164	3097	1.70	**868A1197**	61700
159	3225	1.21	**867A1297**	46500
153	3315	2.54	868A1596	62550
149	3425	1.81	867A1696	46591
147	3473	2.54	868A1696	63026
135	3759	1.70	**868A1397**	63400
132	3883	1.53	867A1796	46760
129	3939	2.54	868A1796	64215
127	4023	1.21	**867A1497**	47600
119	4276	1.49	867A1896	47126
114	4456	1.21	**867A1597**	47400
111	4558	2.24	868A1896	65511
105	4838	1.31	867A1996	45593
99.6	5129	1.21	**867A1697**	46600
97.5	5207	2.00	868A1996	66391
92.4	5513	1.13	867A2096	46300
89.8	5662	1.97	868A2096	67391
88.0	5815	1.03	**867A1797**	45900
86.2	5898	1.70	**868A1797**	67200
82.0	6219	1.00	867A2196	45500
81.4	6239	1.78	868A2196	67683
79.5	6403	1.00	**867A1897**	45700
73.9	6825	1.50	**868A1897**	68100
73.7	6880	0.93	867A2296	45100
70.2	7244	0.87	**867A1997**	44600
67.8	7472	1.42	868A2296	66757
65.4	7750	0.82	867A2396	44400
65.1	7797	1.34	**868A1997**	68000
61.5	8259	1.31	868A2396	66674
60.0	8478	1.31	**868A2097**	69900
56.6	8983	1.18	868A2496	66211
54.4	9342	1.19	**868A2197**	70200
52.2	9695	1.03	868A2596	70300
42.8	11855	0.91	868A2696	67600
39.5	12806	0.85	868A2796	66900

75.0 KW MOTOR

Nominal Output Rev/Min	Output Torque Nm	Service Factor	Unit Selection	Overhung Load N
514	1347	1.88	868A0598	49798
511	1361	1.34	867A0598	38375
466	1496	1.34	867A0698	39375
457	1518	1.88	868A0698	51526
408	1699	1.34	867A0798	40825
389	1780	1.88	868A0798	53883
369	1887	1.34	867A0898	41875
369	1887	1.88	868A0898	54683
336	2075	1.34	867A0998	42900
327	2122	1.88	868A0998	56539
295	2361	1.34	867A1098	43450
278	2491	1.88	868A1098	57796
268	2594	1.34	867A1198	43800
247	2801	1.88	868A1198	58452
239	2917	1.34	867A1298	44150
227	3063	1.88	868A1298	58981
216	3233	1.34	867A1398	44500
204	3400	1.88	868A1398	59609
191	3639	1.34	867A1498	45000
172	4030	1.34	867A1598	45025
171	4046	1.88	868A1498	60750
154	4490	1.88	868A1598	61607
150	4639	1.34	867A1698	44825
148	4704	1.88	868A1698	62035
133	5260	1.13	867A1798	44554
130	5335	1.88	868A1798	63120
120	5791	1.10	867A1898	44597
111	6173	1.66	868A1898	64190
106	6552	0.96	867A1998	41700
98.2	7052	1.48	868A1998	64625
90.4	7669	1.45	868A2098	65625
82.0	8450	1.32	868A2198	65350
68.3	10121	1.05	868A2298	62610
62.0	11187	0.97	868A2398	62003
57.0	12167	0.88	868A2498	60300

90.0 KW MOTOR

Nominal Output Rev/Min	Output Torque Nm	Service Factor	Unit Selection	Overhung Load N
514	1616	1.56	868A0599	49600
511	1633	1.11	867A0599	38100
466	1795	1.11	867A0699	39100
457	1822	1.56	868A0699	51300
408	2039	1.11	867A0799	40500
389	2136	1.56	868A0799	53600
369	2265	1.11	867A0899	41500
369	2264	1.56	868A0899	54400
336	2490	1.11	867A0999	42500
327	2547	1.56	868A0999	56200
295	2833	1.11	867A1099	43000
278	2989	1.56	868A1099	57400
268	3113	1.11	867A1199	43300
247	3361	1.56	868A1199	58000
239	3501	1.11	867A1299	43600
227	3676	1.56	868A1299	58500
216	3880	1.11	867A1399	43900
204	4080	1.56	868A1399	59100
191	4367	1.11	867A1499	44300
172	4836	1.11	867A1599	44100
171	4856	1.56	868A1499	60200
154	5388	1.56	868A1599	60900
150	5567	1.11	867A1699	43500
148	5645	1.56	868A1699	61300
133	6312	0.95	867A1799	42900
130	6402	1.56	868A1799	62300
120	6949	0.92	867A1899	42700
111	7408	1.38	868A1899	63200
98.2	8462	1.23	868A1999	63300
90.4	9202	1.21	868A2099	64300
82.0	10140	1.10	868A2199	63600
68.3	12145	0.88	868A2299	59500
62.0	13424	0.81	868A2399	58500

Series M Gearboxes : Dimensions Motorised

Foot Mounted Motorised

Double/Triple Reduction

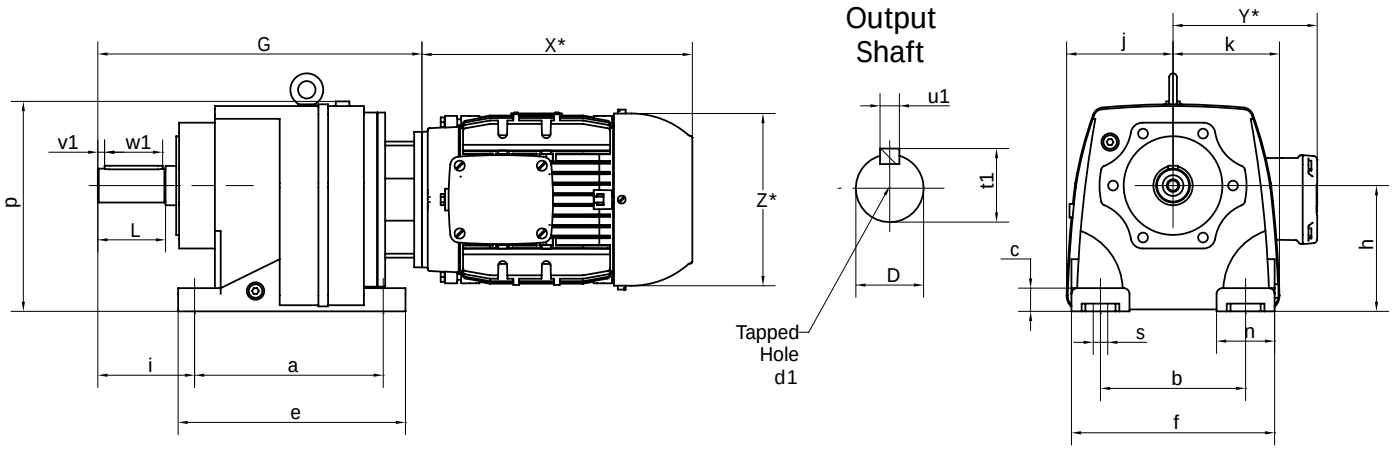

Unit Size	a	b	c	e	f	h**	i	j	k	p	SHAFT DIMENSIONS						
											D	L	t1	u1	v1	w1	d1
860	110	110	12	131	135	75	58	76	76	149	Ø20 k6	40	22.5	6	4	32	M6 x 1.0 x 16 deep
801	130	110	16	152	145	90	75	84	86	180	Ø25 k6	50	28.0	8	4	40	M10 x 1.5 x 22 deep
861	130	110	16	152	145	90	75	84	86	180	Ø25 k6	50	28.0	8	4	40	M10 x 1.5 x 22 deep
802	165	135	20	200	190	115	90	97	107	208	Ø30 k6	60	33.0	8	4	50	M10 x 1.5 x 22 deep
862	165	135	20	200	190	115	100	97	107	208	Ø35 k6	70	38.0	10	7	60	M12 x 1.75 x 28 deep
803	195	150	24	235	210	130	100	110	110	214	Ø35 k6	70	38.0	10	7	60	M12 x 1.75 x 28 deep
863	205	170	25	245	230	140	115	119	133	250	Ø40 k6	80	43.0	12	5	70	M16 x 2.0 x 36 deep
864	260	215	35	310	290	180	140	167	153	310	Ø50 k6	100	53.5	14	10	80	M16 x 2.0 x 36 deep
865	310	250	40	365	340	225	160	200	172	394	Ø60 m6	120	64.0	18	10	100	M20 x 2.5 x 42 deep
866	370	290	45	440	400	250	185	225	203	446	Ø70 m6	140	74.5	20	15	110	M20 x 2.5 x 42 deep
867	410	340	50	490	450	265	220	242	228	483	Ø90 m6	170	95.0	25	15	140	M24 x 3.0 x 50 deep
868	500	380	50	590	530	300	260	278	268	551	Ø100 m6	210	106.0	28	15	180	M24 x 3.0 x 50 deep

G Dimension / Weight (excluding motor)

Unit Size		Motor Frame Size													Triple +
		63	71	80	90	100	112	132	160	180	200	225	250	280	
860	G	209	213	226	236	244	244	-	-	-	-	-	-	-	15
	kg	8.9	8.5	9	10	12	12	-	-	-	-	-	-	-	2.5
801	G	240	244	257	267	275	275	-	-	-	-	-	-	-	13
	kg	12	12	13	13	15	15	-	-	-	-	-	-	-	2.5
861	G	240	244	257	267	275	275	-	-	-	-	-	-	-	13
	kg	12	12	13	13	15	15	-	-	-	-	-	-	-	2.5
802	G	270	276	294	304	331	331	331	-	-	-	-	-	-	23
	kg	20	20	21	22	25	25	27	-	-	-	-	-	-	2.5
862	G	280	286	304	314	341	341	341	-	-	-	-	-	-	23
	kg	21	21	22	23	25	25	27	-	-	-	-	-	-	2.5
803	G	301	307	325	335	362	362	362	-	-	-	-	-	-	23
	kg	26	26	27	28	31	31	33	-	-	-	-	-	-	2.5
863	G	-	-	362	372	384	384	406	414	-	-	-	-	-	30
	kg	-	-	34	35	38	38	40	42	-	-	-	-	-	5
864	G	-	-	477	477	483	483	483	513	-	-	-	-	-	40
	kg	-	-	73	73	73	73	72	72	-	-	-	-	-	5
865	G	-	-	523	523	529	529	564	564	564	564	591	-	-	40
	kg	-	-	117	117	117	117	117	124	124	124	138	-	-	19
866	G	-	-	-	-	596	596	596	631	631	631	658	-	-	57
	kg	-	-	-	-	163	163	163	172	172	172	186	-	-	19
867	G	-	-	-	-	717	717	717	710	710	710	737	909	909	62
	kg	-	-	-	-	239	239	239	247	247	247	261	310	310	32
868	G	-	-	-	-	832	832	832	825	825	825	852	1024	1024	72
	kg	-	-	-	-	344	344	344	357	357	357	371	420	420	50

Fixing Bolts

Unit Size		"Fasteners & Tightening Torque"
860	Size	4 x M8 x 25mm long
	Nm	Tighten to - 25Nm
801	Size	4 x M8 x 30mm long
	Nm	Tighten to - 25Nm
861	Size	4 x M8 x 30mm long
	Nm	Tighten to - 25Nm
802	Size	4 x M12 x 40mm long
	Nm	Tighten to - 85Nm
862	Size	4 x M12 x 40mm long
	Nm	Tighten to - 85Nm
803	Size	4 x M12 x 40mm long
	Nm	Tighten to - 85Nm
863	Size	4 x M16 x 45mm long
	Nm	Tighten to - 200Nm
864	Size	4 x M16 x 60mm long
	Nm	Tighten to - 200Nm
865	Size	4 x M20 x 70mm long
	Nm	Tighten to - 350Nm
866	Size	4 x M24 x 80mm long
	Nm	Tighten to - 610Nm
867	Size	4 x M30 x 90mm long
	Nm	Tighten to - 1220Nm
868	Size	4 x M36 x 100mm long
	Nm	Tighten to - 2150Nm

* For Motor dimensions X,Y and Z - please refer to motor tables on page 314

** The input on the 803 unit is 14.5mm lower than the output

Series M Gearboxes : Dimensions motorised

Flange Mounted Motorised

Double/Triple Reduction

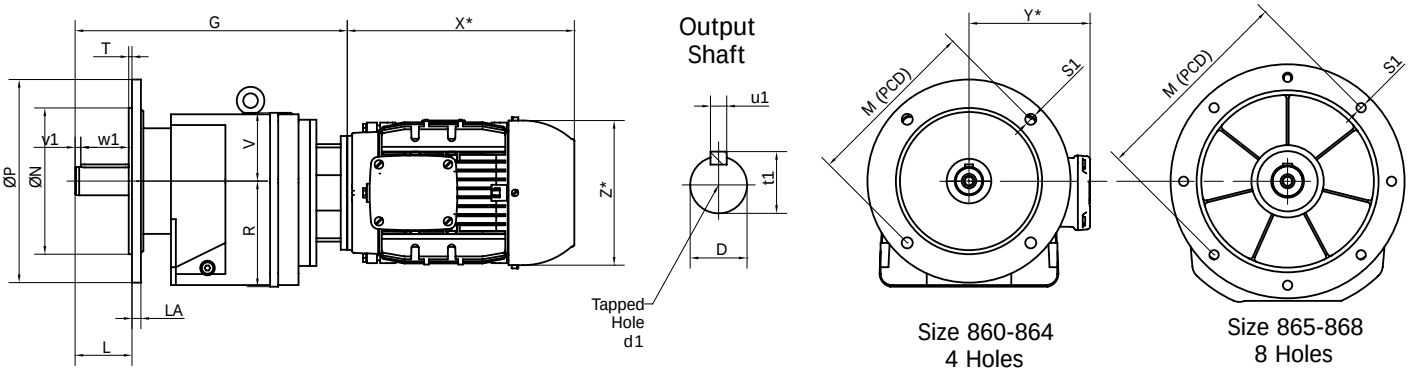

Unit Size	R	V	G	P	FLANGE DIMENSIONS					SHAFT DIMENSIONS						
					N	T	M	S1	LA	D	L	t1	u1	v1	w1	d1
860	76	74	FOR 'G' DIMENSION AND WEIGHT PLEASE REFER TO TABLE ON PAGE 199	120	80	3.0	100	6.6	9	Ø20 k6	40	22.5	6	4	32	M6 x 1.0 x 16 deep
				140	95	3.0	115	9.0	9							
				160	110	3.5	130	9.0	10							
				200	130	3.5	165	11.0	10							
801	91	90		120	80	3.0	100	6.6	10	Ø25 k6	50	28.0	8	4	40	M10 x 1.5 x 22 deep
				140	95	3.0	115	9.0	10							
				160	110	3.5	130	9.0	10							
				200	130	3.5	165	11.0	10							
861	91	90		120	80	3.0	100	6.6	10	Ø25 k6	50	28.0	8	4	40	M10 x 1.5 x 22 deep
				140	95	3.0	115	9.0	10							
				160	110	3.5	130	9.0	10							
				200	130	3.5	165	11.0	10							
802	115	93		140	95	3.0	115	9.0	11	Ø30 k6	60	33.0	8	4	50	M10 x 1.5 x 22 deep
				160	110	3.5	130	9.0	11							
				200	130	3.5	165	11.0	11							
				250	180	4.0	215	13.5	11							
862	115	93		140	95	3.0	115	9.0	11	Ø35 k6	70	38.0	10	7	60	M12 x 1.75 x 28 deep
				160	110	3.5	130	9.0	11							
				200	130	3.5	165	11.0	11							
				250	180	4.0	215	13.5	11							
803	130	84		200	130	4.0	165	11.0	11	Ø35 k6	70	38.0	10	7	60	M12 x 1.75 x 28 deep
				250	180	4.0	215	13.5	11							
				300	230	4.0	265	13.5	11							
863	140	110		200	130	4.0	165	11.0	11	Ø40 k6	80	43.0	12	5	70	M16 x 2.0 x 36 deep
				250	180	4.0	215	13.5	11							
				300	230	4.0	265	13.5	11							
864	182	130		300	230	4.0	265	13.5	17	Ø50 k6	100	53.5	14	10	80	M16 x 2.0 x 36 deep
				350	250	5.0	300	17.5	17							
865	230	230		450	350	5.0	400	18.0	18	Ø60 m6	120	64.0	18	10	100	M20 x 2.5 x 42 deep
866	260	260		450	350	5.0	400	18.0	22	Ø70 m6	140	74.5	20	15	110	M20 x 2.5 x 42 deep
867	278	278		550	450	5.0	500	18.0	25	Ø90 m6	170	95.0	25	15	140	M24 x 3.0 x 50 deep
868	318	318		550	450	5.0	500	18.0	25	Ø100 m6	210	106.0	28	15	180	M24 x 3.0 x 50 deep

*For motor drimensions X,Y &Z please refer to the motor tables on page 314

Series M Gearboxes : Dimensions Motorised

Foot Mounted Motorised

Quadruple/Quintuple reduction

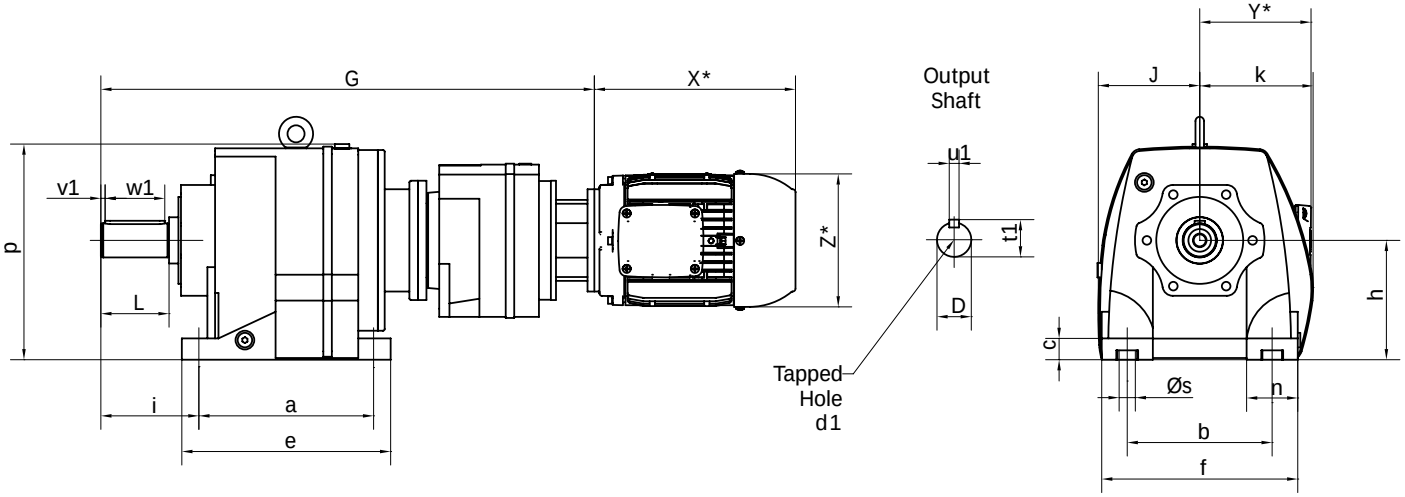

Unit Size	a	b	c	e	f	h**	i	j	k	n	p	s	Shaft Dimensions						
													D	L	t1	u1	v1	w1	d1
860	110	110	12	131	135	75	58	76	76	25	149	10	Ø20 k6	40	22.5	6	4	32	M6 x 1.0 x 16 deep
801	130	110	16	152	145	90	75	84	86	35	180	10	Ø25 k6	50	28.0	8	4	40	M10 x 1.5 x 22 deep
861	130	110	16	152	145	90	75	84	86	35	180	10	Ø25 k6	50	28.0	8	4	40	M10 x 1.5 x 22 deep
802	165	135	20	200	190	115	90	97	107	55	208	15	Ø30 k6	60	33.0	8	4	50	M10 x 1.5 x 22 deep
862	165	135	20	200	190	115	100	97	107	55	208	15	Ø35 k6	70	38.0	10	7	60	M12 x 1.75 x 28 deep
803	195	150	24	235	210	130	100	110	110	60	214	15	Ø35 k6	70	38.0	10	7	60	M12 x 1.75 x 28 deep
863	205	170	25	245	230	140	115	119	133	60	250	19	Ø40 k6	80	43.0	12	5	70	M16 x 2.0 x 36 deep
864	260	215	35	310	290	180	140	167	153	75	310	19	Ø50 k6	100	53.5	14	10	80	M16 x 2.0 x 36 deep
865	310	250	40	365	340	225	160	200	172	90	394	23	Ø60 m6	120	64.0	18	10	100	M20 x 2.5 x 42 deep
866	370	290	45	440	400	250	185	225	203	110	446	27	Ø70 m6	140	74.5	20	15	110	M20 x 2.5 x 42 deep
867	410	340	50	490	450	265	220	242	228	110	483	34	Ø90 m6	170	95.0	25	15	140	M24 x 3.0 x 50 deep
868	500	380	50	590	530	300	260	278	268	150	551	41	Ø100 m6	210	106.0	28	15	180	M24 x 3.0 x 50 deep

G Dimension/Weight (excluding motor)

Unit Size		Motor Frame Size													Quint +
		63	71	80	90	100	112	132	160	180	200	225	250	280	
860	G	209	213	226	236	244	244	-	-	-	-	-	-	-	15
	kg	8.9	8.5	9	10	12	12								2.5
801	G	240	244	257	267	275	275	-	-	-	-	-	-	-	13
	kg	12	12	13	13	15	15								2.5
861	G	240	244	257	267	275	275	-	-	-	-	-	-	-	13
	kg	12	12	13	13	15	15								2.5
802	G	270	276	294	304	331	331	331	-	-	-	-	-	-	23
	kg	20	20	21	22	25	25	27							2.5
862	G	280	286	304	314	341	341	341	-	-	-	-	-	-	23
	kg	21	21	22	23	25	25	27							2.5
803	G	301	307	325	335	362	362	362	-	-	-	-	-	-	23
	kg	26	26	27	28	31	31	33							2.5
863	G	-	-	362	372	384	384	406	414	-	-	-	-	-	30
	kg			34	35	38	38	40	42						5
864	G	-	-	477	477	483	483	483	513	-	-	-	-	-	40
	kg			73	73	73	73	72	72						5
865	G	-	-	523	523	529	529	564	564	564	564	591	-	-	40
	kg			117	117	117	117	117	124	124	124	138			19
866	G	-	-	-	-	596	596	596	631	631	631	658	-	-	57
	kg					163	163	163	172	172	172	186			19
867	G	-	-	-	-	717	717	717	710	710	710	737	909	909	62
	kg					239	239	239	247	247	247	261	310	310	32
868	G	-	-	-	-	832	832	832	825	825	825	852	1024	1024	72
	kg					344	344	344	357	357	357	371	420	420	50

* For Motor dimensions X,Y and Z - please refer to motor tables on page 314

** The input on the 803 unit is 14.5mm lower than the output

Fixing Bolts

Unit Size		Fasteners & Tightening Torque
860	Size	4 x M8 x 25mm long
	Nm	Tighten to - 25Nm
801	Size	4 x M8 x 30mm long
	Nm	Tighten to - 25Nm
861	Size	4 x M8 x 30mm long
	Nm	Tighten to - 25Nm
802	Size	4 x M12 x 40mm long
	Nm	Tighten to - 85Nm
862	Size	4 x M12 x 40mm long
	Nm	Tighten to - 85Nm
803	Size	4 x M12 x 40mm long
	Nm	Tighten to - 85Nm
863	Size	4 x M16 x 45mm long
	Nm	Tighten to - 200Nm
864	Size	4 x M16 x 60mm long
	Nm	Tighten to - 200Nm
865	Size	4 x M20 x 70mm long
	Nm	Tighten to - 350Nm
866	Size	4 x M24 x 80mm long
	Nm	Tighten to - 610Nm
867	Size	4 x M30 x 90mm long
	Nm	Tighten to - 1220Nm
868	Size	4 x M36 x 100mm long
	Nm	Tighten to - 2150Nm

Series M Gearboxes : Dimensions motorised

Flange Mounted Motorised

Quadruple/Quintuple Reduction

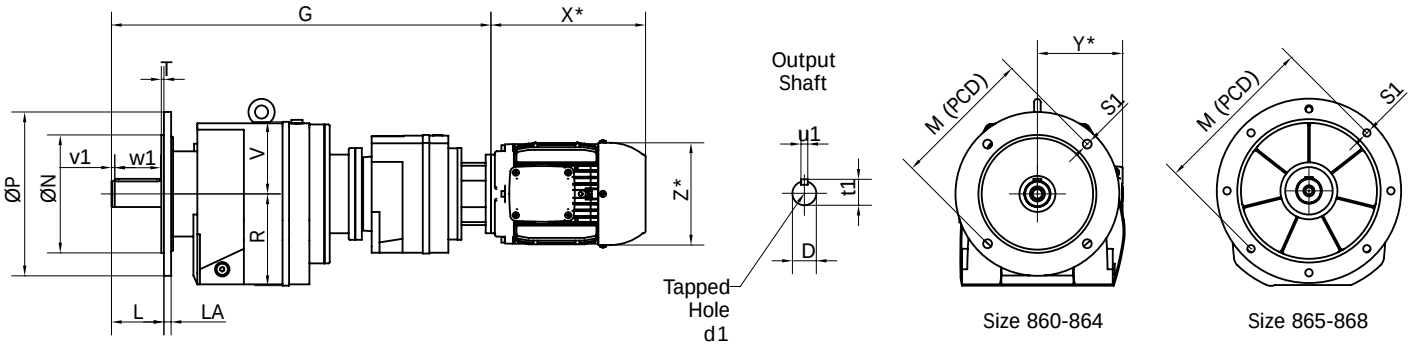

Unit Size	R	V	G	P	Flange Dimensions					Shaft Dimensions						
					N	T	M	S1	LA	D	L	t1	u1	v1	w1	d1
860	76	74	FOR 'G' DIMENSION AND WEIGHT PLEASE REFER TO TABLE ON PAGE 201	120	80	3.0	100	6.6	9	Ø20 k6	40	22.5	6	4	32	M6 x 1.0 x 16 deep
				140	95	3.0	115	9.0	9							
				160	110	3.5	130	9.0	10							
				200	130	3.5	165	11.0	10							
801	91	90		120	80	3.0	100	6.6	10	Ø25 k6	50	28.0	8	4	40	M10 x 1.5 x 22 deep
				140	95	3.0	115	9.0	10							
				160	110	3.5	130	9.0	10							
				200	130	3.5	165	11.0	10							
861	91	90		120	80	3.0	100	6.6	10	Ø25 k6	50	28.0	8	4	40	M10 x 1.5 x 22 deep
				140	95	3.0	115	9.0	10							
				160	110	3.5	130	9.0	10							
				200	130	3.5	165	11.0	10							
802	115	93		140	95	3.0	115	9.0	11	Ø30 k6	60	33.0	8	4	50	M10 x 1.5 x 22 deep
				160	110	3.5	130	9.0	11							
				200	130	3.5	165	11.0	11							
				250	180	4.0	215	13.5	11							
862	115	93		140	95	3.0	115	9.0	11	Ø35 k6	70	38.0	10	7	60	M12 x 1.75 x 28 deep
				160	110	3.5	130	9.0	11							
				200	130	3.5	165	11.0	11							
				250	180	4.0	215	13.5	11							
803	130	84		200	130	4.0	165	11.0	11	Ø35 k6	70	38.0	10	7	60	M12 x 1.75 x 28 deep
				250	180	4.0	215	13.5	11							
				300	230	4.0	265	13.5	11							
863	140	110		200	130	4.0	165	11.0	11	Ø40 k6	80	43.0	12	5	70	M16 x 2.0 x 36 deep
				250	180	4.0	215	13.5	11							
				300	230	4.0	265	13.5	11							
864	182	130		300	230	4.0	265	13.5	17	Ø50 k6	100	53.5	14	10	80	M16 x 2.0 x 36 deep
				350	250	5.0	300	17.5	17							
865	230	230		450	350	5.0	400	18.0	18	Ø60 m6	120	64.0	18	10	100	M20 x 2.5 x 42 deep
866	260	260		450	350	5.0	400	18.0	22	Ø70 m6	140	74.5	20	15	110	M20 x 2.5 x 42 deep
867	278	278		550	450	5.0	500	18.0	25	Ø90 m6	170	95.0	25	15	140	M24 x 3.0 x 50 deep
868	318	318		550	450	5.0	500	18.0	25	Ø100 m6	210	106.0	28	15	180	M24 x 3.0 x 50 deep

Series M Gearboxes : Non motorised selection

SELECTION OF NON-MOTORISED REDUCER UNITS

(a) Service Factor

From Table 1 select the Mechanical Service Factor (Fm) applicable to the drive. If the unit is to be subjected to frequent stop/starts in excess of 10 times per day then multiply factor Fm by Factor Fs from table 2.

(b) Power Required

Determine either the absorbed torque (Nm) or the input power (kW) required by the machine. The absorbed Torque can be calculated using the following formula:

$$M_2 = \frac{P_2 \times 9550}{n_2}$$

M_2 = required output torque (Nm)
P_2 = absorbed power (kW)
n_2 = machine speed (Rev/Min)

(c) Design Power

Multiply either the absorbed torque (Nm) or the power (kW) by the service factor determined in (a)

(d) Ratio Required

Divide the input shaft speed by the required output shaft speed to determine the gear ratio.

(e) Unit Selection

Refer to the gear ratio closest to the value determined in step (d).
Check in column 3 for the nearest input shaft speed, then read across the table at this speed until a unit is found with either an output torque or input power that equals or exceeds the design power value determined in step (c) above. Column 4 gives the approximate output shaft speed for the selected speed and ratio combination.

TABLE 1 – SERVICE FACTORS (Fm)

Types of Driven Machine	Operational Hours		
	Under 3	3 to 10	Over 10
Uniform Loads Agitators and Mixers – liquid or semi-liquid Blowers – centrifugal Bottling Machines Conveyors and Elevators – uniformly loaded Cookers Laundry Washing Machines – non-reversing Line Shafts Pumps – centrifugal and gear Wire Drawing Machines	0.80	1.00	1.25
Moderate Shock Loads Agitators and Mixers – variable density Conveyors – not uniformly loaded Cranes travel motion and hoisting Drawbench Feeders – pulsating load Hoists Kilns Laundry Tumblers Lifts Pumps – reciprocating with 3 or more cylinders Pump and Paper Making Machinery Rubber Mixers and Calendars Screens – rotary Textile Machinery	1.00	1.25	1.50
Heavy Shock Loads Brick Presses Briquetting Machines Conveyors – reciprocating and shaker Crushers Feeders – reciprocating Hammer Mills Pumps – reciprocating, 1 or 2 cylinders Rubber Masticators Screens – vibrating	1.50	1.75	2.00

TABLE 2 - STARTING FACTOR (Fs)

	Start/stops per hour					
	Up to 1	5	10	40	60	>200
Factor Fs	1.00	1.03	1.06	1.10	1.15	1.20

Series M Gearboxes : Non motorised selection

DOUBLE REDUCTION RATINGS SIZES 860, 801, 861, 802

Ratio Code	Nominal Ratio	Input Speed Rev/Min	Nominal Output Speed Rev/Min	860			801			861			802		
				Input Power kW	Output Torque Nm	Overhung Load Fra (kN)	Input Power kW	Output Torque Nm	Overhung Load Fra (kN)	Input Power kW	Output Torque Nm	Overhung Load Fra (kN)	Input Power kW	Output Torque Nm	Overhung Load Fra (kN)
09	3.6	2900	806	3.97	47	0.98	7.00	79	3.00	8.45	96	2.05	14.20	161	2.05
		450	403	2.49	59	0.98	4.39	100	3.10	5.18	118	2.30	8.87	203	2.30
		960	267	1.89	68	0.98	3.33	115	3.10	3.88	134	2.30	6.72	233	2.60
		725	201	1.53	73	0.98	2.74	126	3.10	3.18	146	2.30	5.57	256	3.45
10	5	2900	580	3.34	54	0.98	5.76	92	3.00	6.87	110	2.05	11.80	188	2.05
		1450	290	2.09	68	0.98	3.61	116	3.10	4.22	135	2.30	7.37	237	2.45
		960	192	1.55	76	0.98	2.70	131	3.10	3.16	153	2.30	5.59	272	3.20
		725	145	1.22	79	1.00	2.13	137	3.15	2.59	167	2.30	4.49	290	4.60
11	5.6	2900	518	3.10	57	0.98	5.44	96	3.05	6.47	114	2.05	11.00	198	2.05
		1450	259	1.95	71	0.98	3.41	121	3.10	3.97	140	2.30	6.91	249	2.60
		960	171	1.41	78	1.00	2.50	134	3.10	2.97	159	2.30	5.23	286	3.40
		725	129	1.11	82	1.02	1.97	140	3.15	2.44	173	2.30	4.12	298	4.70
12	6.3	2900	460	2.87	60	0.98	5.04	101	3.05	5.98	120	2.10	10.30	208	2.10
		1450	230	1.80	75	0.98	3.16	127	3.10	3.67	147	2.30	6.46	262	2.90
		960	152	1.27	80	1.00	2.27	138	3.10	2.74	167	2.32	4.79	294	4.60
		725	115	1.01	84	1.04	1.80	145	3.20	2.25	182	2.35	3.78	307	4.75
14	8	2900	363	2.48	66	0.98	4.36	111	3.10	5.13	130	2.10	8.94	229	2.30
		1450	181	1.49	79	0.98	2.67	136	3.10	3.15	161	2.30	5.61	289	3.45
		960	120	1.06	85	1.04	1.88	145	3.25	2.36	182	2.35	3.99	310	4.70
		725	91	0.84	90	1.18	1.51	154	3.50	1.93	198	2.40	3.16	326	5.10
15	9	2900	322	2.36	67	0.98	4.02	116	3.10	4.71	136	2.10	8.29	241	2.40
		1450	161	1.40	80	1.00	2.41	140	3.10	2.89	168	2.30	5.13	299	4.60
		960	107	1.00	87	1.09	1.71	150	3.40	2.17	190	2.35	3.61	319	4.85
		725	81	0.78	90	1.30	1.37	159	3.90	1.78	207	2.50	2.89	338	6.00
17	11	2900	264	2.04	74	0.98	3.53	125	3.10	4.11	146	2.10	7.44	258	2.60
		1450	132	1.16	84	1.02	2.04	145	3.15	2.52	179	2.30	4.46	311	4.70
		960	87	0.82	90	1.30	1.46	158	3.55	1.89	203	2.40	3.17	333	5.55
		725	66	0.62	90	1.45	1.12	160	4.00	1.47	209	2.75	2.42	338	6.40
18	12	2900	242	1.89	77	0.98	3.31	130	3.10	3.84	151	2.15	6.82	272	2.90
		1450	121	1.06	87	1.04	1.88	148	3.20	2.36	186	2.35	3.99	320	4.75
		960	80	0.72	90	1.40	1.34	160	3.70	1.75	209	2.55	2.79	338	6.00
		725	60	0.55	90	1.50	1.01	160	4.00	1.32	209	2.80	2.11	338	6.40
19	14	2900	207	1.70	80	0.98	3.05	136	3.10	3.52	158	2.15	6.20	288	3.10
		1450	104	0.96	90	1.09	1.71	153	3.30	2.16	194	2.35	3.53	329	4.85
		960	69	0.63	90	1.40	1.18	160	3.85	1.54	209	2.75	2.40	338	6.40
		725	52	0.48	90	1.50	0.89	160	4.00	1.16	209	2.85	1.81	338	6.70
20	16	2900	181	1.56	81	0.98	2.79	141	3.10	3.28	166	2.15	5.86	304	3.50
		1450	91	0.86	90	1.18	1.57	160	3.50	2.02	205	2.40	3.25	338	5.10
		960	60	0.57	90	1.45	1.04	160	4.00	1.36	209	2.80	2.15	338	6.50
		725	45	0.43	90	1.50	0.79	160	4.00	1.03	209	2.90	1.62	338	7.10
21	18	2900	161	1.44	83	1.00	2.54	142	3.10	3.03	169	2.30	5.52	306	4.50
		1450	81	0.78	90	1.35	1.43	160	3.90	1.86	208	2.45	3.04	338	5.55
		960	53	0.52	90	1.48	0.94	160	4.00	1.23	209	2.80	2.01	338	6.70
		725	40	0.39	90	1.60	0.71	160	4.00	0.93	209	3.05	1.52	338	7.20
22	20	2900	145	1.33	84	1.00	2.26	145	3.15	2.76	177	2.30	4.81	315	4.60
		1450	73	0.71	90	1.40	1.24	160	3.95	1.62	209	2.60	2.57	338	6.00
		960	48	0.47	90	1.50	0.82	160	4.00	1.07	209	2.90	1.70	338	7.1.0
		725	36	0.35	90	1.60	0.62	160	4.00	0.81	209	3.10	1.28	338	7.20
23	22	2900	132	1.17	86	1.02	2.11	147	3.15	2.61	182	2.30	4.56	319	4.70
		1450	66	0.61	90	1.45	1.14	160	4.00	1.49	209	2.75	2.41	338	6.40
		960	44	0.40	90	1.55	0.76	160	4.00	0.99	209	3.05	1.59	338	7.10
		725	33	0.30	90	1.90	0.57	160	4.00	0.75	209	3.10	1.20	338	7.20
25	28	2900	104	1.01	90	1.05	1.83	153	3.20	2.30	193	2.35	3.82	331	4.80
		1450	52	0.51	90	1.48	0.95	160	4.00	1.25	209	2.80	1.94	338	6.70
		960	34	0.34	90	1.60	0.63	160	4.00	0.82	209	3.10	1.29	338	7.20
		725	26	0.25	90	1.90	0.48	160	4.00	0.62	209	3.15	0.97	338	7.20
26	32	2900	91	0.87	90	1.18	1.59	160	3.50	2.04	205	2.40	3.31	338	5.10
		1450	45	0.44	90	1.50	0.80	160	4.00	1.04	209	2.90	1.65	338	7.10
		960	30	0.29	90	1.90	0.53	160	4.00	0.69	209	3.10	1.09	338	7.20
		725	23	0.22	90	1.90	0.40	160	4.00	0.52	209	3.15	0.82	338	7.20
27	36	2900	81	0.79	90	1.35	1.42	160	3.90	1.85	209	2.45	3.02	338	8.55
		1450	40	0.39	90	1.60	0.71	160	4.00	0.92	209	3.05	1.51	338	7.20
		960	27	0.26	90	1.90	0.47	160	4.00	0.61	209	3.15	1.00	338	7.20
		725	20	0.20	90	1.90	0.35	160	4.00	0.46	209	3.15	0.75	338	7.20
29	45	2900	64	0.61	84	1.45	1.22	160	4.00	1.43	188	2.60	2.47	338	6.40
		1450	32	0.30	84	1.90	0.61	160	4.00	0.75	199	3.10	1.23	338	7.20
		960	21	0.20	84	1.90	0.40	160	4.00	0.52	206	3.15	0.82	338	7.20
		725	16	0.15	84	1.90	0.30	160	4.00	0.40	209	3.15	0.62	338	7.20
30	50	2900	58	0.46	72	1.48	1.07	160	4.00	1.29	192	2.75	2.22	338	6.50
		1450	29	0.23	72	1.90	0.54	160	4.00	0.68	203	3.10	1.11	338	7.20
		960	19	0.15	72	1.90	0.35	160	4.00	0.46	208	3.15	0.73	338	7.20
		725	15	0.11	72	1.90	0.27	160	4.00	0.35	208	3.15	0.55	338	7.20
31	56	2900	52	0.40	71	1.50	0.95	160	4.00	1.21	205	2.80	1.58	269	6.70
		1450	26	0.20	71	1.90	0.47	160	4.00	0.61	206	3.15	0.79	270	7.20
		960	17	0.13	71	1.90	0.31	160	4.00	0.40	206	3.15	0.52	270	7.20
		725	13	0.10	71	1.90	0.24	160	4.00	0.30	206	3.15	0.40	270	7.20

Series M Gearboxes : Non motorised selection

DOUBLE REDUCTION RATINGS SIZES 862, 803, 863 and 864

Ratio Code	Nominal Ratio	Input Speed Rev/Min	Nominal Output Speed Rev/Min	862			803			863			864		
				Input Power kW	Output Torque Nm	Overhung Load Fra (kN)	Input Power kW	Output Torque Nm	Overhung Load Fra (kN)	Input Power kW	Output Torque Nm	Overhung Load Fra (kN)	Input Power kW	Output Torque Nm	Overhung Load Fra (kN)
09	3.6	2900	806	23.10	263	2.80	-	-	-	26.10	304	3.50	41.30	479	5.50
		1450	403	12.80	292	2.80	-	-	-	13.10	306	3.50	20.70	483	6.20
		960	267	8.44	293	2.80	-	-	-	8.65	307	3.50	13.70	484	6.25
		725	201	6.38	293	2.80	-	-	-	6.53	307	3.50	10.30	485	6.36
10	5	2900	580	19.70	317	2.80	23.10	326	4.00	26.10	423	3.50	41.30	683	5.60
		1450	290	11.80	382	2.80	12.80	362	4.35	13.10	425	3.50	20.70	686	6.20
		960	192	7.84	383	2.80	8.44	363	4.45	8.65	425	3.50	13.70	688	6.35
		725	145	5.92	383	2.85	6.38	363	4.50	6.53	426	3.50	10.30	688	6.50
11	5.6	2900	518	18.60	336	2.80	19.70	393	4.10	24.50	447	3.50	41.30	760	5.80
		1450	259	11.30	409	2.80	11.80	473	4.45	13.10	477	3.50	20.70	763	6.25
		960	171	7.54	412	2.80	7.84	474	4.50	8.65	478	3.50	13.70	764	6.40
		725	129	5.69	413	2.85	5.92	474	5.00	6.53	478	3.50	10.30	765	6.60
12	6.3	2900	460	17.50	354	2.80	18.60	416	4.20	23.20	464	3.50	40.60	832	6.00
		1450	230	10.20	413	2.85	11.40	510	4.45	13.10	525	3.50	20.70	849	6.30
		960	152	6.74	413	2.90	7.54	511	4.60	8.65	526	3.50	13.70	851	6.50
		725	115	5.09	414	2.90	5.69	511	5.20	6.53	526	3.50	10.30	851	6.70
14	8	2900	363	14.80	381	2.80	17.50	438	4.30	19.90	519	3.50	34.90	926	6.20
		1450	181	8.55	441	2.85	10.20	512	4.45	12.50	655	3.50	20.70	1100	6.35
		960	120	5.77	450	2.90	6.74	512	4.70	8.65	687	3.50	13.70	1100	6.70
		725	91	4.36	450	2.95	5.09	512	5.20	6.53	687	3.60	10.30	1100	7.25
15	9	2900	322	13.40	391	2.80	15.20	484	4.35	18.40	547	3.50	32.50	967	6.20
		1450	161	7.69	450	2.90	9.30	594	4.50	11.50	689	3.50	20.50	1220	6.50
		960	107	5.09	450	2.95	6.15	594	5.20	8.24	743	3.50	13.70	1240	7.10
		725	81	3.84	450	3.00	4.64	594	6.50	6.52	780	3.70	10.30	1240	8.00
17	11	2900	264	11.70	406	2.80	14.00	507	4.45	16.30	589	3.50	28.40	1040	6.20
		1450	132	6.45	450	2.90	8.34	604	4.70	10.00	726	3.50	17.90	1310	6.60
		960	87	4.27	450	2.95	5.55	607	5.85	7.06	773	3.60	13.60	1500	7.50
		725	66	3.22	450	4.00	4.19	607	7.20	5.59	811	4.25	10.30	1520	9.00
18	12	2900	242	10.50	418	2.85	12.50	538	4.45	15.40	611	3.50	25.80	1060	6.30
		1450	121	5.31	426	2.90	7.11	613	5.20	9.28	740	3.60	16.30	1340	6.90
		960	80	3.52	427	3.25	4.79	625	6.50	6.58	793	3.70	12.40	1540	8.50
		725	60	2.66	427	4.20	3.62	625	7.20	5.13	819	4.20	10.20	1690	9.00
19	14	2900	207	9.28	432	2.85	10.60	527	4.45	14.10	644	3.50	23.30	1120	6.30
		1450	104	4.82	450	2.95	5.31	528	5.20	8.31	761	3.60	14.70	1410	6.90
		960	69	3.19	450	4.00	3.52	528	7.20	5.84	808	4.00	11.20	1620	9.00
		725	52	2.41	450	4.25	2.66	528	7.20	4.53	830	4.50	8.82	1700	9.50
20	16	2900	181	8.50	442	2.85	10.10	584	4.50	13.20	684	3.50	21.70	1150	6.38
		1450	91	4.32	450	2.95	5.16	596	5.85	7.58	786	3.50	13.40	1420	7.25
		960	60	2.86	450	4.10	3.42	597	7.20	5.22	818	4.20	8.85	1420	9.00
		725	45	2.16	450	4.50	2.58	597	7.20	4.05	841	4.65	6.68	1420	9.50
21	18	2900	161	8.08	448	2.90	9.28	598	4.50	12.30	700	3.50	19.90	1160	6.50
		1450	81	4.05	450	3.00	4.85	626	6.50	6.93	794	3.60	11.70	1360	8.00
		960	53	2.68	450	4.20	3.21	626	7.20	4.77	826	4.50	7.74	1360	9.25
		725	40	2.02	450	4.50	2.42	626	7.20	3.71	849	5.10	5.85	1360	10.00
22	20	2900	145	6.85	450	2.90	8.75	601	4.60	11.20	731	3.50	18.30	1200	6.50
		1450	73	3.42	450	3.50	4.55	626	7.20	6.14	804	3.90	11.10	1460	8.50
		960	48	2.26	450	4.50	3.01	626	7.20	4.23	837	4.60	7.34	1460	9.50
		725	36	1.71	450	5.60	2.27	626	7.20	3.28	861	6.25	5.54	1460	12.30
23	22	2900	132	6.41	450	2.90	7.50	610	4.90	10.10	748	3.50	16.60	1230	6.60
		1450	66	3.20	450	4.00	3.84	626	7.20	5.50	813	4.20	10.30	1540	9.00
		960	44	2.12	450	4.50	2.54	626	7.20	3.79	847	5.10	6.84	1540	10.00
		725	33	1.60	450	6.30	1.92	626	7.20	2.93	867	7.40	5.16	1540	12.30
25	28	2900	104	5.17	450	2.90	7.07	614	5.20	8.97	768	3.50	14.00	1260	6.90
		1450	52	2.58	450	4.25	3.60	626	7.20	4.81	825	4.50	8.80	1580	9.25
		960	34	1.71	450	5.60	2.38	626	7.20	3.32	860	6.25	6.13	1670	12.30
		725	26	1.29	450	7.20	1.80	626	7.20	2.53	867	8.00	4.63	1670	14.00
26	32	2900	91	4.39	450	2.95	5.81	626	5.80	7.70	786	3.50	12.20	1280	7.25
		1450	45	2.19	450	4.50	2.90	626	7.20	4.11	840	4.65	7.72	1620	9.50
		960	30	1.45	450	6.30	1.92	626	7.20	2.81	867	7.40	5.36	1700	13.50
		725	23	1.10	450	7.20	1.45	626	7.20	2.12	868	9.20	4.04	1700	16.20
27	36	2900	81	4.02	450	3.00	4.93	626	6.50	7.10	792	3.60	11.40	1310	8.00
		1450	40	2.01	450	5.00	2.47	626	7.20	3.79	847	5.10	7.18	1650	10.00
		960	27	1.33	450	7.20	1.63	626	7.20	2.57	867	8.00	4.88	1700	14.00
		725	20	1.00	450	7.20	1.23	626	7.20	1.94	868	9.20	3.69	1700	16.20
29	45	2900	64	3.03	415	4.00	4.51	626	7.20	6.03	806	3.90	9.51	1340	9.00
		1450	32	1.55	424	5.60	2.25	626	7.20	3.23	863	6.25	5.99	1690	12.30
		960	21	1.06	439	7.20	1.49	626	7.20	2.15	868	9.20	3.98	1700	16.20
		725	16	0.82	450	7.20	1.13	626	7.20	1.62	868	9.20	3.01	1700	16.20
30	50	2900	58	2.48	379	4.00	3.03	514	7.20	4.56	700	4.20	8.79	1350	9.20
		1450	29	1.24	379	6.30	1.55	526	7.20	2.28	700	7.40	5.48	1690	13.50
		960	19	0.82	379	7.20	1.06	544	7.20	1.51	701	9.20	3.65	1700	16.20
		725	15	0.62	379	7.20	0.82	557	7.20	1.14	701	9.20	2.76	1700	16.20
31	56	2900	52	1.58	269	4.25	2.48	469	7.20	3.49	595	4.50	7.72	1360	9.25
		1450	26	0.79	270	7.20	1.24	470	7.20	1.75	596	9.20	4.36	1540	16.20
		960	17	0.52	270	7.20	0.82	470	7.20	1.16	596	9.20	2.91	1550	16.20
		725	13	0.40	270	7.20	0.62	470	7.20	0.87	596	9.20	2.19	1550	16.20

Series M Gearboxes : Non motorised selection

DOUBLE REDUCTION RATINGS SIZES 865 - 868

Ratio Code	Nominal Ratio	Input Speed Rev/Min	Nominal Output Speed Rev/Min	865			866			867			868		
				Input Power kW	Output Torque Nm	Overhung Load Fra (kN)	Input Power kW	Output Torque Nm	Overhung Load Fra (kN)	Input Power kW	Output Torque Nm	Overhung Load Fra (kN)	Input Power kW	Output Torque Nm	Overhung Load Fra (kN)
1	1.4	2900	2071	96.10	452	10.00	156.00	719	12.00	-	-	-	-	-	-
		1450	1036	60.60	574	10.00	78.20	722	12.00	-	-	-	-	-	-
		960	686	46.00	661	10.10	51.80	722	12.20	-	-	-	-	-	-
		725	518	38.20	727	10.10	39.10	723	12.20	-	-	-	-	-	-
2	1.8	2900	1611	82.20	534	10.00	156.00	1010	12.00	-	-	-	-	-	-
		1450	806	51.80	677	10.10	78.20	1010	12.20	-	-	-	-	-	-
		960	533	39.30	779	10.10	51.80	1010	12.20	-	-	-	-	-	-
		725	403	32.60	856	10.20	39.10	1010	12.30	-	-	-	-	-	-
3	2.2	2900	1318	77.50	565	10.00	156.00	1100	12.00	-	-	-	-	-	-
		1450	659	48.80	716	10.10	78.20	1100	12.20	-	-	-	-	-	-
		960	436	37.10	824	10.20	51.80	1100	12.30	-	-	-	-	-	-
		725	330	30.80	906	10.20	39.10	1100	12.30	-	-	-	-	-	-
4	2.5	2900	1160	72.90	596	10.00	147.00	1170	12.00	-	-	-	-	-	-
		1450	580	45.90	756	10.10	78.20	1250	12.20	-	-	-	-	-	-
		960	384	34.90	869	10.20	51.80	1250	12.30	-	-	-	-	-	-
		725	290	28.90	956	10.40	39.10	1250	12.40	-	-	-	-	-	-
5	2.8	2900	1036	96.10	909	10.00	156.00	1490	12.00	195.00	1810	28.00	274.00	2520	35.00
		1450	518	60.60	1150	10.10	78.20	1490	12.20	97.40	1810	28.70	137.00	2520	36.00
		960	343	46.00	1320	10.20	51.80	1500	12.30	64.50	1810	29.50	90.60	2520	37.50
		725	259	38.20	1460	10.40	39.10	1500	12.40	48.70	1810	30.00	68.50	2520	38.00
6	3.2	2900	906	63.60	671	10.10	126.00	1310	12.20	195.00	1980	28.30	274.00	2840	35.50
		1450	453	40.00	850	10.20	75.20	1570	12.30	97.40	1990	29.20	137.00	2840	37.00
		960	300	30.40	978	10.40	49.80	1570	12.40	64.50	1990	30.00	90.60	2840	38.00
		725	227	25.20	1070	10.60	37.60	1570	12.40	48.70	1990	31.00	68.50	2840	39.00
7	3.6	2900	806	58.60	692	10.10	118.00	1330	12.20	195.00	2250	28.30	274.00	3320	35.50
		1450	403	36.90	876	10.20	69.70	1570	12.30	97.40	2260	29.20	137.00	3330	37.00
		960	267	28.10	1010	10.40	46.10	1570	12.40	64.50	2260	30.00	90.60	3330	38.00
		725	201	22.80	1090	10.60	34.80	1570	12.40	48.70	2260	31.00	68.50	3330	39.00
8	4	2900	725	82.20	1070	10.10	156.00	2090	12.20	195.00	2510	28.30	274.00	3520	35.50
		1450	363	51.80	1360	10.20	78.20	2090	12.30	97.40	2510	29.50	137.00	3530	37.50
		960	240	39.30	1560	10.60	51.80	2090	12.40	64.50	2510	31.00	90.60	3530	39.00
		725	181	32.60	1710	10.80	39.10	2100	12.50	48.70	2510	32.50	68.50	3530	40.00
9	4.5	2900	644	77.50	1130	10.10	152.00	2200	12.20	195.00	2760	28.30	274.00	3970	35.50
		1450	322	48.80	1440	10.20	78.20	2280	12.30	97.40	2760	29.50	137.00	3970	37.50
		960	213	37.10	1650	10.60	51.80	2280	12.40	64.50	2760	31.00	90.60	3970	39.00
		725	161	30.80	1810	10.80	39.10	2280	12.50	48.70	2760	32.50	68.50	3970	40.00
10	5	2900	580	82.20	1330	10.10	144.00	2260	12.20	195.00	3130	28.70	274.00	4650	36.00
		1450	290	51.80	1680	10.40	78.20	2470	12.40	97.40	3140	30.00	137.00	4660	38.00
		960	192	39.30	1930	10.80	51.80	2470	12.50	64.50	3140	32.50	90.60	4660	40.00
		725	145	32.60	2120	11.00	39.10	2470	12.50	48.70	3140	35.00	68.50	4660	41.00
11	5.6	2900	518	77.50	1410	10.10	137.00	2340	12.20	195.00	3440	28.70	274.00	5240	36.00
		1450	259	48.80	1780	10.40	78.20	2690	12.40	97.40	3450	30.00	137.00	5240	38.00
		960	171	37.10	2040	10.80	51.80	2690	12.50	64.50	3450	32.50	90.60	5240	40.00
		725	129	30.70	2250	11.00	39.10	2690	12.50	48.70	3450	35.00	68.50	5240	41.00
12	6.3	2900	460	63.60	1350	10.20	119.00	2550	12.30	195.00	3880	29.20	274.00	5730	37.00
		1450	230	40.00	1700	10.60	72.90	3140	12.40	97.40	3880	31.00	137.00	5730	39.00
		960	152	30.40	1960	11.00	51.80	3370	12.50	64.50	3880	35.00	90.60	5730	41.00
		725	115	25.20	2150	11.40	39.10	3370	13.00	48.70	3880	38.00	68.50	5730	43.00
13	7.1	2900	408	58.60	1390	10.20	113.00	2620	12.30	195.00	4300	29.20	274.00	6370	37.00
		1450	204	36.90	1760	10.60	69.50	3230	12.40	97.40	4300	31.00	137.00	6360	39.00
		960	135	28.10	2020	11.00	51.80	3640	12.50	64.50	4300	35.00	90.60	6360	41.00
		725	102	23.30	2220	11.40	39.10	3640	13.00	48.70	4300	38.00	68.50	6370	43.00
14	8	2900	363	63.60	1670	10.20	107.00	2700	12.30	195.00	4840	29.50	274.00	7570	37.50
		1450	181	39.50	2080	10.80	65.50	3330	12.50	97.40	4840	32.50	137.00	7570	40.00
		960	120	29.60	2360	11.40	49.00	3760	13.00	64.50	4840	38.00	90.60	7570	43.00
		725	91	24.30	2560	13.00	39.10	3980	15.00	48.70	4850	42.00	68.50	7570	46.00
15	9	2900	322	58.60	1720	10.20	102.00	2780	12.30	186.00	5110	29.50	274.00	8410	37.50
		1450	161	36.80	2170	10.80	62.40	3420	12.50	97.40	5360	32.50	137.00	8400	40.00
		960	107	27.50	2450	11.40	46.70	3870	13.00	64.50	5370	38.00	90.60	8400	43.00
		725	81	22.60	2670	13.00	38.30	4210	15.00	48.70	5370	42.00	68.50	8410	46.00
16	10	2900	290	47.40	1560	10.40	88.30	2990	12.40	173.00	5470	30.00	248.00	7980	38.00
		1450	145	29.80	1970	11.00	54.20	3680	12.50	97.40	6170	35.00	137.00	8800	41.00
		960	96	22.70	2260	13.00	36.80	3770	15.00	64.50	6180	42.00	90.60	8810	46.00
		725	73	18.80	2480	15.70	27.8	3770	15.90	48.70	6180	45.00	68.50	8810	52.00
17	11	2900	264	43.10	1610	10.40	81.40	3120	12.40	165.00	5900	30.00	227.00	8270	38.00
		1450	132	27.10	2040	11.00	49.10	3770	12.50	82.70	5940	35.00	137.00	9980	41.00
		960	87	20.60	2340	13.00	32.50	3770	15.00	54.70	5940	42.00	90.60	9990	46.00
		725	66	17.10	2570	15.70	24.50	3770	15.90	41.30	5940	45.00	68.40	9990	52.00

Series M Gearboxes : Non motorised selection

DOUBLE REDUCTION RATINGS SIZES 865 - 868

Ratio Code	Nominal Ratio	Input Speed Rev/Min	Nominal Output Speed Rev/Min	865			866			867			868		
				Input Power kW	Output Torque Nm	Overhung Load Fra (kN)	Input Power kW	Output Torque Nm	Overhung Load Fra (kN)	Input Power kW	Output Torque Nm	Overhung Load Fra (kN)	Input Power kW	Output Torque Nm	Overhung Load Fra (kN)
18	12	2900	242	47.40	1930	10.60	79.10	3160	12.40	136.00	5370	31.00	241.00	10200	39.00
		1450	121	29.60	2420	11.40	48.60	3890	13.00	80.30	6350	38.00	121.00	10200	43.00
		960	80	22.20	2740	13.00	36.40	4400	15.00	53.20	6350	42.00	79.80	10200	46.00
		725	60	17.50	2860	17.00	27.50	4410	23.00	40.10	6350	51.00	60.20	10200	60.00
19	14	2900	207	43.10	2000	10.60	72.90	3290	12.40	131.00	5880	31.00	215.00	10400	39.00
		1450	104	27.10	2530	11.40	44.80	4050	13.00	70.30	6290	38.00	108.00	10400	43.00
		960	69	20.30	2860	15.70	32.20	4410	15.90	46.50	6290	45.00	71.30	10400	52.00
		725	52	15.30	2860	17.00	24.30	4410	23.00	35.10	6290	51.00	53.80	10400	60.00
20	16	2900	181	32.90	1750	10.80	65.90	3460	12.50	119.00	6070	32.50	172.00	8970	40.00
		1450	91	20.70	2210	13.00	35.90	3770	15.00	60.80	6200	42.00	106.00	11100	46.00
		960	60	15.70	2530	17.00	23.70	3770	23.00	40.20	6200	51.00	70.20	11100	60.00
		725	45	12.40	2640	22.40	17.90	3770	28.00	30.40	6200	56.00	53.00	11100	70.00
21	18	2900	161	29.90	1760	10.80	60.40	3520	12.50	108.00	6200	32.50	161.00	9260	40.00
		1450	81	18.90	2230	13.00	32.30	3770	15.00	53.90	6200	42.00	96.20	11100	46.00
		960	53	14.30	2560	17.00	21.40	3770	23.00	35.70	6200	51.00	63.70	11100	60.00
		725	40	11.20	2640	22.40	16.10	3770	28.00	26.90	6200	56.00	48.10	11100	70.00
22	20	2900	145	32.90	2160	11.00	58.90	3650	12.50	94.10	5980	35.00	153.00	10600	41.00
		1450	73	20.70	2730	15.70	35.60	4410	15.90	49.90	6350	45.00	76.70	10600	52.00
		960	48	14.30	2860	22.40	23.50	4410	28.00	33.00	6350	56.00	50.70	10600	70.00
		725	36	10.80	2860	26.20	17.80	4410	34.00	24.90	6350	60.00	38.30	10600	79.00
23	22	2900	132	29.90	2190	11.00	54.90	3770	12.50	88.60	6350	35.00	142.00	10800	41.00
		1450	66	18.90	2760	15.70	32.00	4410	15.90	44.30	6350	45.00	70.70	10800	52.00
		960	44	12.90	2860	22.40	21.20	4410	28.00	29.30	6350	56.00	46.80	10800	70.00
		725	33	9.75	2860	26.20	16.00	4410	34.00	22.10	6350	60.00	35.40	10800	79.00
24	25	2900	116	22.60	1880	11.40	45.20	3760	13.00	76.70	6200	38.00	115.00	9530	43.00
		1450	58	14.20	2370	17.00	22.70	3770	23.00	38.30	6200	51.00	63.80	10600	60.00
		960	38	10.50	2640	26.20	15.00	3770	34.00	25.40	6200	60.00	42.20	10600	79.00
		725	29	7.93	2640	28.00	11.30	3770	40.00	19.10	6200	64.00	31.90	10600	79.00
25	28	2900	104	20.70	1900	11.40	39.50	3770	13.00	68.90	6200	38.00	109.00	9770	43.00
		1450	52	13.00	2400	17.00	19.70	3770	23.00	34.40	6200	51.00	55.60	9970	60.00
		960	34	9.51	2640	26.20	13.00	3770	34.00	22.80	6200	60.00	36.80	9980	79.00
		725	26	7.18	2640	28.00	9.85	3770	40.00	17.20	6200	64.00	27.80	9980	79.00
26	32	2900	91	22.60	2330	13.00	43.10	4220	15.00	62.90	6350	42.00	97.60	10700	46.00
		1450	45	13.80	2860	22.40	22.50	4410	28.00	31.40	6350	56.00	48.80	10700	70.00
		960	30	9.16	2860	28.00	14.90	4410	40.00	20.80	6350	64.00	32.30	10700	79.00
		725	23	6.92	2860	28.00	11.20	4410	40.00	15.70	6350	64.00	24.40	10700	79.00
27	36	2900	81	20.70	2350	13.00	39.10	4410	15.00	56.60	6350	42.00	91.30	10800	46.00
		1450	40	12.50	2860	22.40	19.50	4410	28.00	28.30	6350	56.00	45.60	10800	70.00
		960	27	8.30	2860	28.00	12.90	4410	40.00	18.70	6350	64.00	30.20	10800	79.00
		725	20	6.26	2860	28.00	9.76	4410	40.00	14.10	6350	64.00	22.80	10800	79.00
28	40	2900	73	19.30	2460	15.70	35.30	4160	15.90	49.40	6090	45.00	75.70	9400	52.00
		1450	36	9.62	2470	26.20	17.60	4160	34.00	26.20	6460	60.00	39.90	9940	79.00
		960	24	6.37	2470	28.00	11.70	4160	40.00	17.40	6460	64.00	26.90	10100	79.00
		725	18	4.81	2470	28.00	8.82	4160	40.00	13.10	6460	64.00	20.30	10100	79.00
29	45	2900	64	17.40	2470	15.70	30.70	4160	15.90	45.00	6160	45.00	70.20	9460	52.00
		1450	32	8.71	2470	26.20	15.30	4160	34.00	23.60	6460	60.00	37.10	10000	79.00
		960	21	5.77	2470	28.00	10.10	4160	40.00	15.60	6460	64.00	24.80	10100	79.00
		725	16	4.35	2470	28.00	7.66	4160	40.00	11.80	6460	64.00	18.70	10100	79.00
30	50	2900	58	15.60	2430	17.00	27.90	4250	23.00	36.70	5660	51.00	50.10	8130	60.00
		1450	29	9.14	2860	28.00	14.00	4260	40.00	18.40	5660	64.00	25.10	8140	79.00
		960	19	6.05	2860	28.00	9.25	4260	40.00	12.20	5660	64.00	16.60	8140	79.00
		725	15	4.57	2860	28.00	6.98	4260	40.00	9.19	5660	64.00	12.50	8140	79.00
31	56	2900	52	12.10	2120	17.00	23.70	3870	23.00	36.70	6020	51.00	46.50	8440	60.00
		1450	26	5.71	2000	28.00	11.80	3870	40.00	18.40	6030	64.00	23.20	8450	79.00
		960	17	3.67	1940	28.00	7.84	3870	40.00	12.20	6030	64.00	15.40	8450	79.00
		725	13	2.72	1910	28.00	5.92	3870	40.00	9.19	6030	64.00	11.60	8450	79.00
32	63	2900	46	12.70	2470	22.40	22.70	4160	28.00	33.80	6360	56.00	50.10	9270	70.00
		1450	23	6.35	2470	28.00	11.40	4160	40.00	17.20	6460	64.00	25.10	9270	79.00
		960	15	4.21	2470	28.00	7.52	4160	40.00	11.40	6460	64.00	16.60	9280	79.00
		725	12	3.18	2470	28.00	5.68	4160	40.00	8.59	6460	64.00	12.50	9280	79.00
33	71	2900	41	11.30	2470	22.40	21.20	4160	28.00	32.00	6400	56.00	46.50	9620	70.00
		1450	20	5.66	2470	28.00	10.60	4160	40.00	16.10	6460	64.00	23.20	9630	79.00
		960	14	3.67	2420	28.00	7.02	4160	40.00	10.70	6460	64.00	15.40	9630	79.00
		725	10	2.72	2380	28.00	5.30	4160	40.00	8.07	6460	64.00	11.60	9630	79.00

Series M Gearboxes : Non motorised selection

TRIPLE REDUCTION RATINGS SIZES 860 - 864

Ratio Code	Nominal Ratio	Input Speed Rev/Min	Nominal Output Speed Rev/Min	860			801			861			802		
				Input Power kW	Output Torque Nm	Overhung Load Fra (kN)	Input Power kW	Output Torque Nm	Overhung Load Fra (kN)	Input Power kW	Output Torque Nm	Overhung Load Fra (kN)	Input Power kW	Output Torque Nm	Overhung Load Fra (kN)
44	56	2900	52	0.50	90	1.50	0.89	159	4.00	1.17	209	2.80	1.57	287	6.70
		1450	26	0.25	90	1.90	0.45	160	4.00	0.58	209	3.15	0.92	338	7.20
		960	17	0.16	90	1.90	0.30	160	4.00	0.39	209	3.15	0.61	338	7.20
		725	13	0.12	90	1.90	0.22	160	4.00	0.29	209	3.15	0.46	338	7.20
45	63	2900	46	0.45	90	1.50	0.81	160	4.00	1.06	209	2.90	1.46	293	7.10
		1450	23	0.22	90	1.90	0.41	160	4.00	0.53	209	3.15	0.84	338	7.20
		960	15	0.15	90	1.90	0.27	160	4.00	0.35	209	3.15	0.55	338	7.20
		725	12	0.11	90	1.90	0.20	160	4.00	0.26	209	3.15	0.42	338	7.20
46	71	2900	41	0.41	90	1.60	0.74	160	4.00	0.97	209	3.00	1.31	302	7.20
		1450	20	0.20	90	1.90	0.37	160	4.00	0.48	209	3.15	0.73	338	7.20
		960	14	0.13	90	1.90	0.24	160	4.00	0.32	209	3.15	0.48	338	7.20
		725	10	0.10	90	1.90	0.18	160	4.00	0.24	209	3.15	0.36	338	7.20
47	80	2900	36	0.35	90	1.70	0.63	160	4.00	0.82	209	3.10	1.22	307	7.20
		1450	18	0.17	90	1.90	0.31	160	4.00	0.41	209	3.15	0.67	338	7.20
		960	12	0.12	90	1.90	0.21	160	4.00	0.27	209	3.15	0.44	338	7.20
		725	9	0.09	90	1.90	0.16	160	4.00	0.20	209	3.15	0.33	338	7.20
49	100	2900	29	0.29	90	1.90	0.53	160	4.00	0.69	209	3.15	1.07	324	7.20
		1450	15	0.14	90	1.90	0.26	160	4.00	0.34	209	3.15	0.56	338	7.20
		960	10	0.10	90	1.90	0.17	160	4.00	0.23	209	3.15	0.37	338	7.20
		725	7	0.07	90	1.90	0.13	160	4.00	0.17	209	3.15	0.28	338	7.20
50	112	2900	26	0.25	90	1.90	0.45	160	4.00	0.59	209	3.15	0.93	338	7.20
		1450	13	0.12	90	1.90	0.23	160	4.00	0.29	209	3.15	0.47	338	7.20
		960	9	0.08	90	1.90	0.15	160	4.00	0.19	209	3.15	0.31	338	7.20
		725	6	0.06	90	1.90	0.11	160	4.00	0.15	209	3.15	0.23	338	7.20
51	125	2900	23	0.22	90	1.90	0.41	160	4.00	0.53	209	3.15	0.83	338	7.20
		1450	12	0.11	90	1.90	0.20	160	4.00	0.27	209	3.15	0.41	338	7.20
		960	8	0.07	90	1.90	0.14	160	4.00	0.18	209	3.15	0.27	338	7.20
		725	6	0.06	90	1.90	0.10	160	4.00	0.13	209	3.15	0.21	338	7.20
53	160	2900	18	0.19	90	1.90	0.34	160	4.00	0.44	209	3.15	0.71	338	7.20
		1450	9	0.09	90	1.90	0.17	160	4.00	0.22	209	3.15	0.36	338	7.20
		960	6	0.06	90	1.90	0.11	160	4.00	0.15	209	3.15	0.23	338	7.20
		725	5	0.05	90	1.90	0.08	160	4.00	0.11	209	3.15	0.18	338	7.20
54	180	2900	16	0.16	90	1.90	0.29	160	4.00	0.39	209	3.15	0.63	338	7.20
		1450	8	0.08	90	1.90	0.15	160	4.00	0.19	209	3.15	0.31	338	7.20
		960	5	0.05	90	1.90	0.10	160	4.00	0.13	209	3.15	0.21	338	7.20
		725	4	0.04	90	1.90	0.07	160	4.00	0.10	209	3.15	0.16	338	7.20
55	200	2900	15	0.14	90	1.90	0.26	160	4.00	0.34	209	3.15	0.55	338	7.20
		1450	7	0.07	90	1.90	0.13	160	4.00	0.17	209	3.15	0.28	338	7.20
		960	5	0.05	90	1.90	0.09	160	4.00	0.11	209	3.15	0.18	338	7.20
		725	4	0.04	90	1.90	0.06	160	4.00	0.09	209	3.15	0.14	338	7.20

Ratio Code	Nominal Ratio	Input Speed Rev/Min	Nominal Output Speed Rev/Min	862			803			863			864		
				Input Power kW	Output Torque Nm	Overhung Load Fra (kN)	Input Power kW	Output Torque Nm	Overhung Load Fra (kN)	Input Power kW	Output Torque Nm	Overhung Load Fra (kN)	Input Power kW	Output Torque Nm	Overhung Load Fra (kN)
44	56	2900	52	2.42	443	4.20	-	-	-	3.47	640	4.50	6.94	1300	9.25
		1450	26	1.22	450	7.20	-	-	-	2.03	754	8.10	4.23	1600	16.20
		960	17	0.81	450	7.20	-	-	-	1.54	865	9.20	2.96	1700	16.20
		725	13	0.61	450	7.20	-	-	-	1.17	868	9.20	2.23	1700	16.20
45	63	2900	46	2.14	431	4.50	2.42	549	7.20	3.30	649	4.65	6.50	1340	9.50
		1450	23	1.11	450	7.20	1.38	626	7.20	1.95	770	9.20	3.97	1650	16.20
		960	15	0.74	450	7.20	0.91	626	7.20	1.45	868	9.20	2.71	1700	16.20
		725	12	0.56	450	7.20	0.69	626	7.20	1.09	868	9.20	2.04	1700	16.20
46	71	2900	41	1.91	443	5.00	2.14	534	7.20	2.88	673	5.10	5.96	1390	10.00
		1450	20	0.97	450	7.20	1.24	623	7.20	1.74	815	9.20	3.62	1700	16.20
		960	14	0.64	450	7.20	0.82	626	7.20	1.22	868	9.20	2.39	1700	16.20
		725	10	0.48	450	7.20	0.62	626	7.20	0.92	868	9.20	1.80	1700	16.20
47	80	2900	36	1.78	450	5.60	1.91	549	7.20	2.74	682	6.30	5.47	1440	12.30
		1450	18	0.89	450	7.20	1.09	626	7.20	1.67	833	9.20	3.21	1700	16.20
		960	12	0.59	450	7.20	0.72	626	7.20	1.15	868	9.20	2.12	1700	16.20
		725	9	0.44	450	7.20	0.54	626	7.20	0.87	868	9.20	1.60	1700	16.20
49	100	2900	29	1.49	450	6.30	1.79	558	7.20	2.31	714	7.40	4.78	1520	14.00
		1450	15	0.74	450	7.20	1.00	626	7.20	1.40	868	9.20	2.65	1700	16.20
		960	10	0.49	450	7.20	0.66	626	7.20	0.93	868	9.20	1.75	1700	16.20
		725	7	0.37	450	7.20	0.50	626	7.20	0.70	868	9.20	1.32	1700	16.20
50	112	2900	26	1.24	450	7.20	1.56	585	7.20	2.06	751	9.20	4.29	1600	16.20
		1450	13	0.62	450	7.20	0.83	626	7.20	1.19	868	9.20	2.27	1700	16.20
		960	9	0.41	450	7.20	0.55	626	7.20	0.79	868	9.20	1.50	1700	16.20
		725	6	0.31	450	7.20	0.42	626	7.20	0.60	874	9.20	1.13	1700	16.20
51	125	2900	23	1.10	450	7.20	1.37	613	7.20	1.94	774	9.20	4.02	1640	16.20
		1450	12	0.55	450	7.20	0.70	626	7.20	1.09	868	9.20	2.07	1700	16.20
		960	8	0.36	450	7.20	0.46	626	7.20	0.72	868	9.20	1.37	1700	16.20
		725	6	0.28	450	7.20	0.35	626	7.20	0.55	883	9.20	1.03	1700	16.20
53	160	2900	18	0.95	450	7.20	1.24	626	7.20	1.70	828	9.20	3.39	1700	16.20
		1450	9	0.47	450	7.20	0.62	626	7.20	0.89	868	9.20	1.69	1700	16.20
		960	6	0.31	450	7.20	0.41	626	7.20	0.59	875	9.20	1.12	1700	16.20
		725	5	0.24	450	7.20	0.31	626	7.20	0.45	888	9.20	0.85	1720	16.20
54	180	2900	16	0.83	450	7.20	1.06	626	7.20	1.58	858	9.20	3.10	1700	16.20
		1450	8	0.42	450	7.20	0.53	626	7.20	0.80	868	9.20	1.55	1700	16.20
		960	5	0.28	450	7.20	0.35	626	7.20	0.54	886	9.20	1.02	1700	16.20
		725	4	0.21	450	7.20	0.26	626	7.20	0.41	888	9.20	0.79	1730	16.20
55	200	2900	15	0.74	450	7.20	0.94	626	7.20	1.43	868	9.20	2.70	1700	16.20
		1450	7	0.37	450	7.20	0.47	626	7.20	0.71	868	9.20	1.35	1700	16.20
		960	5	0.24	450	7.20	0.31	626	7.20	0.48	888	9.20	0.90	1710	16.20
		725	4	0.18	450	7.20	0.23	626	7.20	0.36	888	9.20	0.69	1750	16.20

Series M Gearboxes : Non motorised selection

TRIPLE REDUCTION RATINGS SIZES 865 - 868

Ratio Code	Nominal Ratio	Input Speed Rev/Min	Nominal Output Speed Rev/Min	865			866			867			868		
				Input Power kW	Output Torque Nm	Overhung Load Fra (kN)	Input Power kW	Output Torque Nm	Overhung Load Fra (kN)	Input Power kW	Output Torque Nm	Overhung Load Fra (kN)	Input Power kW	Output Torque Nm	Overhung Load Fra (kN)
41	40	2900	73	-	-	-	-	-	-	35.00	4380	45.00	58.10	75200	52.00
		1450	36	-	-	-	-	-	-	21.90	5530	60.00	37.50	9740	79.00
		960	24	-	-	-	-	-	-	15.60	5940	64.00	26.60	10500	79.00
		725	18	-	-	-	-	-	-	12.30	6200	64.00	21.30	11100	79.00
42	45	2900	64	-	-	-	-	-	-	38.90	5360	45.00	62.70	9430	52.00
		1450	32	-	-	-	-	-	-	22.20	6170	60.00	36.40	11000	79.00
		960	21	-	-	-	-	-	-	15.10	6350	64.00	24.10	11000	79.00
		725	16	-	-	-	-	-	-	11.40	6350	64.00	18.20	11000	79.00
43	50	2900	58	-	-	-	-	-	-	35.00	5460	51.00	58.10	9930	60.00
		1450	29	-	-	-	-	-	-	20.10	6310	64.00	32.10	11000	79.00
		960	19	-	-	-	-	-	-	13.40	6350	64.00	21.20	11000	79.00
		725	15	-	-	-	-	-	-	10.10	6350	64.00	16.00	11000	79.00
44	56	2900	52	11.20	2100	17.00	17.90	3380	23.00	29.60	5270	51.00	46.70	8680	60.00
		1450	26	6.84	2590	28.00	9.94	3770	40.00	17.30	6190	64.00	28.10	10500	79.00
		960	17	4.62	2640	28.00	6.57	3770	40.00	11.40	6200	64.00	19.70	11100	79.00
		725	13	3.49	2640	28.00	4.95	3770	40.00	8.63	6200	64.00	14.80	11100	79.00
45	63	2900	46	10.40	2170	22.40	16.60	3490	28.00	26.80	5380	56.00	44.00	9020	70.00
		1450	23	6.29	2640	28.00	8.95	3770	40.00	15.30	6200	64.00	26.00	10700	79.00
		960	15	4.16	2640	28.00	5.91	3770	40.00	10.10	6200	64.00	17.80	11100	79.00
		725	12	3.14	2640	28.00	4.46	3770	40.00	7.66	6200	64.00	13.50	11100	79.00
46	71	2900	41	10.10	2350	22.40	16.40	3640	28.00	26.60	5920	56.00	44.80	11000	70.00
		1450	20	6.10	2860	28.00	9.85	4410	40.00	14.20	6350	64.00	22.30	11000	79.00
		960	14	4.03	2860	28.00	6.51	4410	40.00	9.39	6350	64.00	14.80	11000	79.00
		725	10	3.04	2860	28.00	4.91	4410	40.00	7.09	6350	64.00	11.10	11000	79.00
47	80	2900	36	9.38	2420	26.20	15.20	3760	34.00	24.10	6060	60.00	40.70	11000	79.00
		1450	18	5.49	2860	28.00	8.87	4410	40.00	12.60	6350	64.00	20.30	11000	79.00
		960	12	3.63	2860	28.00	5.86	4410	40.00	8.33	6350	64.00	13.40	11000	79.00
		725	9	2.74	2860	28.00	4.42	4410	40.00	6.29	6350	64.00	10.10	11000	79.00
48	90	2900	32	8.15	2400	26.20	12.60	3770	34.00	20.90	5930	60.00	34.40	10100	79.00
		1450	16	4.46	2640	28.00	6.27	3770	40.00	10.90	6200	64.00	18.80	11100	79.00
		960	11	2.95	2640	28.00	4.15	3770	40.00	7.21	6200	64.00	12.40	11100	79.00
		725	8	2.23	2640	28.00	3.13	3770	40.00	5.44	6200	64.00	9.39	11100	79.00
49	100	2900	29	7.60	2480	28.00	10.90	3770	40.00	19.20	6050	64.00	32.20	10300	79.00
		1450	15	4.04	2640	28.00	5.45	3770	40.00	9.79	6200	64.00	17.30	11100	79.00
		960	10	2.67	2640	28.00	3.60	3770	40.00	6.48	6200	64.00	11.50	11100	79.00
		725	7	2.02	2640	28.00	2.72	3770	40.00	4.89	6200	64.00	8.66	11100	79.00
50	112	2900	26	7.36	2690	28.00	11.80	4180	40.00	18.00	6350	64.00	28.30	11000	79.00
		1450	13	3.89	2860	28.00	6.22	4410	40.00	8.95	6350	64.00	14.10	11000	79.00
		960	9	2.57	2860	28.00	4.11	4410	40.00	5.92	6350	64.00	9.34	11000	79.00
		725	6	1.94	2860	28.00	3.10	4410	40.00	4.47	6350	64.00	7.05	11000	79.00
51	125	2900	23	6.86	2770	28.00	10.70	4360	40.00	16.10	6350	64.00	26.10	11000	79.00
		1450	12	3.52	2860	28.00	5.40	4410	40.00	8.04	6350	64.00	13.00	11000	79.00
		960	8	2.33	2860	28.00	3.57	4410	40.00	5.32	6350	64.00	8.61	11000	79.00
		725	6	1.76	2860	28.00	2.70	4410	40.00	4.02	6350	64.00	6.50	11000	79.00
52	140	2900	21	5.46	2470	28.00	9.82	4160	40.00	15.00	6460	64.00	22.90	10100	79.00
		1450	10	2.71	2470	28.00	4.89	4160	40.00	7.47	6460	64.00	11.40	10100	79.00
		960	7	1.79	2470	28.00	3.23	4170	40.00	4.94	6460	64.00	7.54	10100	79.00
		725	5	1.35	2470	28.00	2.44	4170	40.00	3.73	6460	64.00	5.69	10100	79.00
53	160	2900	18	4.94	2470	28.00	8.53	4160	40.00	13.50	6460	64.00	21.10	10100	79.00
		1450	9	2.46	2470	28.00	4.25	4170	40.00	6.71	6460	64.00	10.50	10100	79.00
		960	6	1.62	2470	28.00	2.81	4170	40.00	4.44	6460	64.00	6.95	10100	79.00
		725	5	1.23	2480	28.00	2.13	4200	40.00	3.35	6460	64.00	5.25	10100	79.00
54	180	2900	16	5.15	2860	28.00	8.03	4410	40.00	11.70	6350	64.00	19.00	11000	79.00
		1450	8	2.57	2860	28.00	4.00	4410	40.00	5.86	6350	64.00	9.49	11000	79.00
		960	5	1.70	2860	28.00	2.65	4410	40.00	3.88	6350	64.00	6.28	11000	79.00
		725	4	1.28	2860	28.00	2.00	4410	40.00	2.93	6350	64.00	4.74	11000	79.00
55	200	2900	15	4.59	2860	28.00	7.48	4410	40.00	11.00	6350	64.00	17.00	11000	79.00
		1450	7	2.29	2860	28.00	3.73	4410	40.00	5.50	6350	64.00	8.48	11000	79.00
		960	5	1.51	2860	28.00	2.47	4410	40.00	3.64	6350	64.00	5.61	11000	79.00
		725	4	1.14	2860	28.00	1.86	4410	40.00	2.75	6350	64.00	4.23	11000	79.00
56	225	2900	13	3.59	2470	28.00	6.31	4160	40.00	9.80	6460	64.00	15.40	10100	79.00
		1450	6	1.79	2470	28.00	3.15	4170	40.00	4.89	6460	64.00	7.66	10100	79.00
		960	4	1.19	2480	28.00	2.10	4210	40.00	3.23	6460	64.00	5.07	10100	79.00
		725	3	0.89	2480	28.00	1.61	4270	40.00	2.44	6460	64.00	3.83	10100	79.00
57	250	2900	12	3.20	2470	28.00	5.88	4160	40.00	9.21	6460	64.00	13.70	10100	79.00
		1450	6	1.59	2470	28.00	2.93	4170	40.00	4.59	6460	64.00	6.84	10100	79.00
		960	4	1.06	2480	28.00	1.97	4240	40.00	3.04	6460	64.00	4.53	10100	79.00
		725	3	0.80	2480	28.00	1.50	4270	40.00	2.29	6460	64.00	3.42	10100	79.00

Series M Gearboxes : Dimensions Non Motorised

Foot Mounted - Non Motorised

Double/Triple reduction

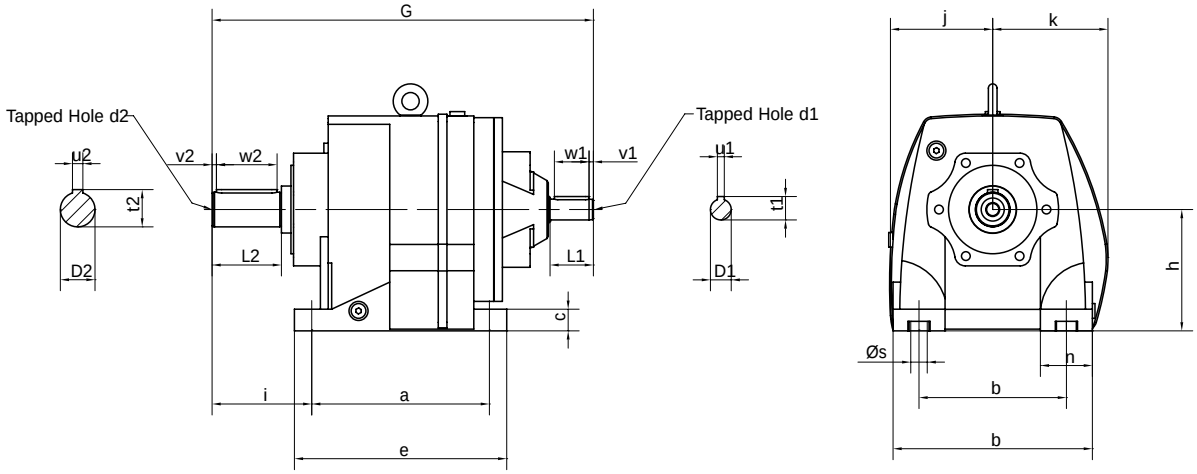

Unit Size	a	b	c	e	f	h*	i	j	k	n	p	s	Output Shaft Dimensions						
													D2	L2	t2	u2	v2	w2	d2
860	110	110	12	131	135	75	58	76	76	25	149	10	Ø20 k6	40	22.5	6	4	32	M6 x 1.0 x 16 deep
801	130	110	16	152	145	90	75	84	86	35	180	10	Ø25 k6	50	28.0	8	4	40	M10 x 1.5 x 22 deep
861	130	110	16	152	145	90	75	84	86	35	180	10	Ø25 k6	50	28.0	8	4	40	M10 x 1.5 x 22 deep
802	165	135	20	200	190	115	90	97	107	55	208	15	Ø30 k6	60	33.0	8	4	50	M10 x 1.5 x 22 deep
862	165	135	20	200	190	115	100	97	107	55	208	15	Ø35 k6	70	38.0	10	7	60	M12 x 1.75 x 28 deep
803	195	150	24	235	210	130	100	110	110	60	214	15	Ø35 k6	70	38.0	10	7	60	M12 x 1.75 x 28 deep
863	205	170	25	245	230	140	115	119	133	60	250	19	Ø40 k6	80	43.0	12	5	70	M16 x 2.0 x 36 deep
864	260	215	35	310	290	180	140	167	153	75	310	19	Ø50 k6	100	53.5	14	10	80	M16 x 2.0 x 36 deep
865	310	250	40	365	340	225	160	200	172	90	394	23	Ø60 m6	120	64.0	18	10	100	M20 x 2.5 x 42 deep
866	370	290	45	440	400	250	185	225	203	110	446	27	Ø70 m6	140	74.5	20	15	110	M20 x 2.5 x 42 deep
867	410	340	50	490	450	265	220	242	228	110	483	34	Ø90 m6	170	95.0	25	15	140	M24 x 3.0 x 50 deep
868	500	380	50	590	530	300	260	278	268	150	551	41	Ø100 m6	210	106.0	28	15	180	M24 x 3.0 x 50 deep

Input Shaft

Unit Size		Input Shaft Dimensions							G	kg **
		D1	L1	t1	u1	v1	w1	d1		
860	Double	16 k6	40	18.0	5	4	32	M5 x 0.8 x 12 deep	286	8.2
	Triple	16 k6	40	18.0	5	4	32	M5 x 0.8 x 12 deep	301	8.8
801	Double	16 k6	40	18.0	5	4	32	M5 x 0.8 x 12 deep	317	12
	Triple	16 k6	40	18.0	5	4	32	M5 x 0.8 x 12 deep	330	13
861	Double	16 k6	40	18.0	5	4	32	M5 x 0.8 x 12 deep	317	12
	Triple	16 k6	40	18.0	5	4	32	M5 x 0.8 x 12 deep	330	13
802	Double	19 k6	40	21.5	6	4	32	M6 x 1.0 x 16 deep	369	22
	Triple	16 k6	40	18.0	5	4	32	M5 x 0.8 x 12 deep	377	24
862	Double	19 k6	40	21.5	6	4	32	M6 x 1.0 x 16 deep	379	22
	Triple	16 k6	40	18.0	5	4	32	M5 x 0.8 x 12 deep	387	24
803	Double	19 k6	40	21.5	6	4	32	M6 x 1.0 x 16 deep	400	27
	Triple	16 k6	40	18.0	5	4	32	M5 x 0.8 x 12 deep	408	29
863	Double	24 k6	50	27.0	8	5	40	M8 x 1.25 x 19 deep	440	38
	Triple	19 k6	40	21.5	6	4	32	M6 x 1.0 x 16 deep	452	39
864	Double	28 k6	60	31.0	8	5	50	M10 x 1.5 x 22 deep	555	67
	Triple	24 k6	50	27.0	8	5	40	M8 x 1.25 x 19 deep	540	74
865	Double	38 k6	80	41.0	10	5	70	M12 x 1.75 x 28 deep	660	114
	Triple	28 k6	60	31.0	8	5	50	M10 x 1.5 x 22 deep	662	123
866	Double	42 k6	110	45.0	12	10	70	M16 x 2.0 x 36 deep	782	170
	Triple	38 k6	80	41.0	10	5	70	M12 x 1.75 x 28 deep	784	179
867	Double	55 m6	110	59.0	16	10	90	M20 x 2.5 x 42 deep	907	248
	Triple	55 m6	110	59.0	16	10	90	M20 x 2.5 x 42 deep	969	270
868	Double	55 m6	110	59.0	16	10	90	M20 x 2.5 x 42 deep	1022	360
	Triple	55 m6	110	59.0	16	10	90	M20 x 2.5 x 42 deep	1094	405

* The input on the 803 unit is 14.5mm lower than the output

** All weights are approximate and exclude lubricant and packing

Fixing Bolts

Unit Size		Fasteners & Tightening Torque
860	Size	4 x M8 x 25mm long
	Nm	Tighten to - 25Nm
801	Size	4 x M8 x 30mm long
	Nm	Tighten to - 25Nm
861	Size	4 x M8 x 30mm long
	Nm	Tighten to - 25Nm
802	Size	4 x M12 x 40mm long
	Nm	Tighten to - 85Nm
862	Size	4 x M12 x 40mm long
	Nm	Tighten to - 85Nm
803	Size	4 x M12 x 40mm long
	Nm	Tighten to - 85Nm
863	Size	4 x M16 x 45mm long
	Nm	Tighten to - 200Nm
864	Size	4 x M16 x 60mm long
	Nm	Tighten to - 200Nm
865	Size	4 x M20 x 70mm long
	Nm	Tighten to - 350Nm
866	Size	4 x M24 x 80mm long
	Nm	Tighten to - 610Nm
867	Size	4 x M30 x 90mm long
	Nm	Tighten to - 1220Nm
868	Size	4 x M36 x 100mm long
	Nm	Tighten to - 2150Nm

Series M Gearboxes : Dimensions non motorised

Flange Mounted - Non Motorised

Double/Triple reduction

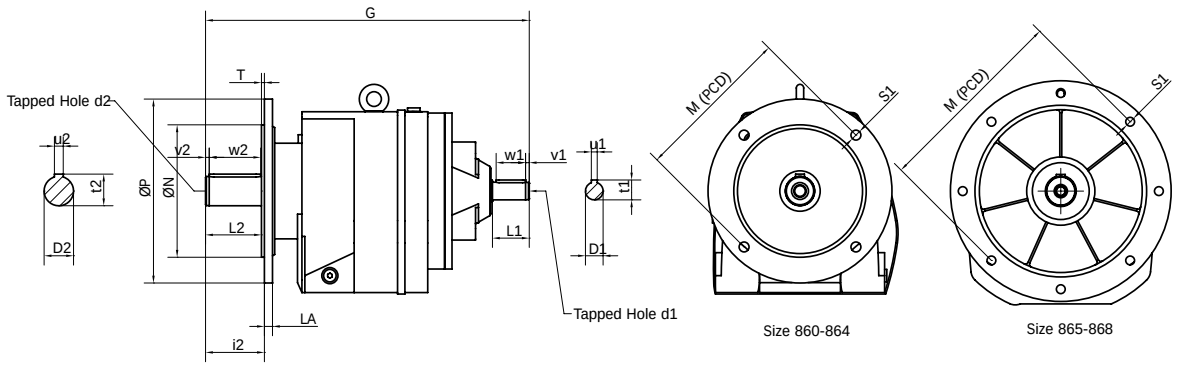

Unit Size	R	V	FLANGE DIMENSIONS *						OUTPUT SHAFT DIMENSIONS							Optional Flanges (P)		
			ØP	N	T	M	S1	LA	D2	L2	t2	u2	v2	w2	d2			
860	76	74	160	110	3.5	130	9.0	10	Ø20 k6	40	22.5	6	4	32	M6 x 1.0 x 16 deep	120	140	200
801	91	90	160	110	3.5	130	9.0	10	Ø25 k6	50	28.0	8	4	40	M10 x 1.5 x 22 deep	120	140	200
861	91	90	200	130	3.5	165	11.0	10	Ø25 k6	50	28.0	8	4	40	M10 x 1.5 x 22 deep	120	140	160
802	115	93	200	130	3.5	165	11.0	11	Ø30 k6	60	33.0	8	4	50	M10 x 1.5 x 22 deep	140	160	250
862	115	93	250	180	4.0	215	13.5	11	Ø35 k6	70	38.0	10	7	60	M12 x 1.75 x 28 deep	140	160	200
803	130	84	250	180	4.0	215	13.5	11	Ø35 k6	70	38.0	10	7	60	M12 x 1.75 x 28 deep	200	300	-
863	140	110	300	230	4.0	265	13.5	11	Ø40 k6	80	43.0	12	5	70	M16 x 2.0 x 36 deep	200	250	-
864	182	130	350	250	5.0	300	17.5	17	Ø50 k6	100	53.5	14	10	80	M16 x 2.0 x 36 deep	300	-	-
865	230	230	450	350	5.0	400	18.0	18	Ø60 m6	120	64.0	18	10	100	M20 x 2.5 x 42 deep	-	-	-
866	260	260	450	350	5.0	400	18.0	22	Ø70 m6	140	74.5	20	15	110	M20 x 2.5 x 42 deep	-	-	-
867	278	278	550	450	5.0	500	18.0	25	Ø90 m6	170	95.0	25	15	140	M24 x 3.0 x 50 deep	-	-	-
868	318	318	550	450	5.0	500	18.0	25	Ø100 m6	210	106	28	15	180	M24 x 3.0 x 50 deep	-	-	-

* Units are shown with Standard Flange size - see table below for optional flange dimensions

Input Shaft

Unit Size		Input Shaft Dimensions							G	kg **
		D1	L1	t1	u1	v1	w1	d1		
860	Double	16 k6	40	18.0	5	4	32	M5 x 0.8 x 12 deep	286	8.2
	Triple	16 k6	40	18.0	5	4	32	M5 x 0.8 x 12 deep	301	8.8
801	Double	16 k6	40	18.0	5	4	32	M5 x 0.8 x 12 deep	317	12
	Triple	16 k6	40	18.0	5	4	32	M5 x 0.8 x 12 deep	330	13
861	Double	16 k6	40	18.0	5	4	32	M5 x 0.8 x 12 deep	317	12
	Triple	16 k6	40	18.0	5	4	32	M5 x 0.8 x 12 deep	330	13
802	Double	19 k6	40	21.5	6	4	32	M6 x 1.0 x 16 deep	369	22
	Triple	16 k6	40	18.0	5	4	32	M5 x 0.8 x 12 deep	377	24
862	Double	19 k6	40	21.5	6	4	32	M6 x 1.0 x 16 deep	379	22
	Triple	16 k6	40	18.0	5	4	32	M5 x 0.8 x 12 deep	387	24
803	Double	19 k6	40	21.5	6	4	32	M6 x 1.0 x 16 deep	400	27
	Triple	16 k6	40	18.0	5	4	32	M5 x 0.8 x 12 deep	408	29
863	Double	24 k6	50	27.0	8	5	40	M8 x 1.25 x 19 deep	440	38
	Triple	19 k6	40	21.5	6	4	32	M6 x 1.0 x 16 deep	452	39
864	Double	28 k6	60	31.0	8	5	50	M10 x 1.5 x 22 deep	555	67
	Triple	24 k6	50	27.0	8	5	40	M8 x 1.25 x 19 deep	540	74
865	Double	38 k6	80	41.0	10	5	70	M12 x 1.75 x 28 deep	660	114
	Triple	28 k6	60	31.0	8	5	50	M10 x 1.5 x 22 deep	662	123
866	Double	42 k6	110	45.0	12	10	70	M16 x 2.0 x 36 deep	782	170
	Triple	38 k6	80	41.0	10	5	70	M12 x 1.75 x 28 deep	784	179
867	Double	55 m6	110	59.0	16	10	90	M20 x 2.5 x 42 deep	907	248
	Triple	55 m6	110	59.0	16	10	90	M20 x 2.5 x 42 deep	969	270
868	Double	55 m6	110	59.0	16	10	90	M20 x 2.5 x 42 deep	1022	360
	Triple	55 m6	110	59.0	16	10	90	M20 x 2.5 x 42 deep	1094	405

** All weights are approximate and exclude lubricant and packing

Optional Flange Dimensions

ØP	120	140	160	200	250	300
N	80	95	110	130	180	230
T	3.0	3.0	3.5	3.5	4.0	4.0
M	100	115	130	165	215	265
S1	6.6	9.0	9.0	11.0	13.5	13.5
LA	9	9	10	10	11	11

Series M Gearboxes : Dimensions Non Motorised

Foot Mounted - Non Motorised

Quadruple/Quintuple reduction

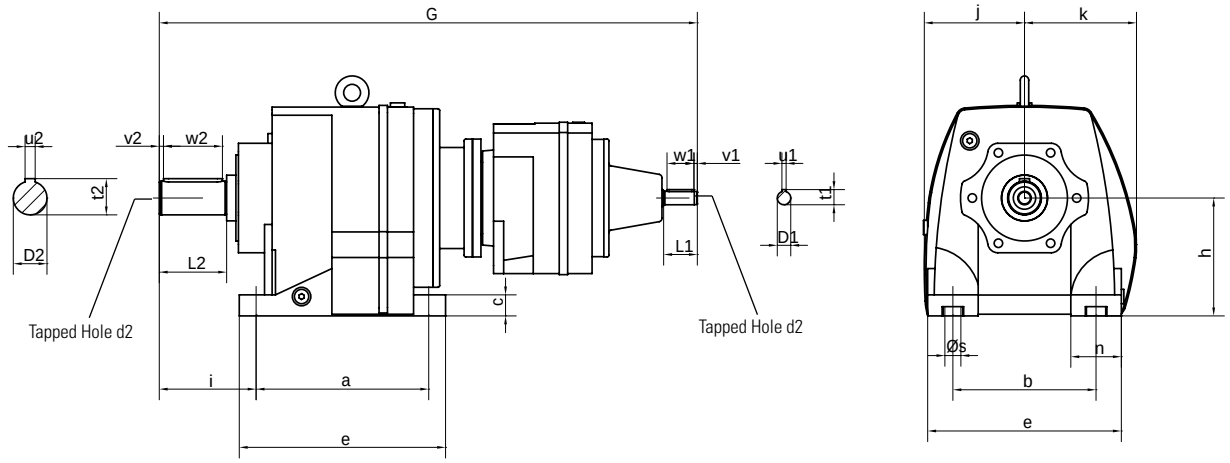

Unit Size	a	b	c	e	f	h*	i	j	k	n	p	s	Output Shaft Dimensions						
													D2	L2	t2	u2	v2	w2	d2
861	130	110	16	152	145	90	75	84	86	35	180	10	Ø25 k6	50	28.0	8	4	40	M10 x 1.5 x 22 deep
802	165	135	20	200	190	115	90	97	107	55	208	15	Ø30 k6	60	33.0	8	4	50	M10 x 1.5 x 22 deep
862	165	135	20	200	190	115	100	97	107	55	208	15	Ø35 k6	70	38.0	10	7	60	M12 x 1.75 x 28 deep
803	195	150	24	235	210	130	100	110	110	60	214	15	Ø35 k6	70	38.0	10	7	60	M12 x 1.75 x 28 deep
863	205	170	25	245	230	140	115	119	133	60	250	19	Ø40 k6	80	43.0	12	5	70	M16 x 2.0 x 36 deep
864	260	215	35	310	290	180	140	167	153	75	310	19	Ø50 k6	100	53.5	14	10	80	M16 x 2.0 x 36 deep
865	310	250	40	365	340	225	160	200	172	90	394	23	Ø60 m6	120	64.0	18	10	100	M20 x 2.5 x 42 deep
866	370	290	45	440	400	250	185	225	203	110	446	27	Ø70 m6	140	74.5	20	15	110	M20 x 2.5 x 42 deep
867	410	340	50	490	450	265	220	242	228	110	483	34	Ø90 m6	170	95.0	25	15	140	M24 x 3.0 x 50 deep
868	500	380	50	590	530	300	260	278	268	150	551	41	Ø100 m6	210	106.0	28	15	180	M24 x 3.0 x 50 deep

Input Shaft

Unit Size		Input Shaft Dimensions							G	kg **
		D1	L1	t1	u1	v1	w1	d1		
861	Quadruple	16 k6	40	18.0	5	4	32	M5 x 0.8 x 12 deep	503	21
	Quintuple	16 k6	40	18.0	5	4	32	M5 x 0.8 x 12 deep	518	22
802	Quadruple	16 k6	40	18.0	5	4	32	M5 x 0.8 x 12 deep	571	33
	Quintuple	16 k6	40	18.0	5	4	32	M5 x 0.8 x 12 deep	584	34
862	Quadruple	16 k6	40	18.0	5	4	32	M5 x 0.8 x 12 deep	581	35
	Quintuple	16 k6	40	18.0	5	4	32	M5 x 0.8 x 12 deep	594	36
803	Quadruple	16 k6	40	18.0	5	4	32	M5 x 0.8 x 12 deep	602	40
	Quintuple	16 k6	40	18.0	5	4	32	M5 x 0.8 x 12 deep	615	41
863	Quadruple	16 k6	40	18.0	5	4	32	M5 x 0.8 x 12 deep	639	48
	Quintuple	16 k6	40	18.0	5	4	32	M5 x 0.8 x 12 deep	651	52
864	Quadruple	19 k6	40	21.5	6	4	32	M6 x 1.0 x 16 deep	751	96
	Quintuple	16 k6	40	18.0	5	4	32	M5 x 0.8 x 12 deep	759	98
865	Quadruple	19 k6	40	21.5	6	4	32	M6 x 1.0 x 16 deep	832	140
	Quintuple	16 k6	40	18.0	5	4	32	M5 x 0.8 x 12 deep	840	143
866	Quadruple	24 k6	50	27.0	8	5	40	M8 x 1.25 x 19 deep	956	204
	Quintuple	19 k6	40	21.5	6	4	32	M6 x 1.0 x 16 deep	968	209
867	Quadruple	24 k6	50	27.0	8	5	40	M8 x 1.25 x 19 deep	1077	279
	Quintuple	19 k6	40	21.5	6	4	32	M6 x 1.0 x 16 deep	1089	285
868	Quadruple	24 k6	50	27.0	8	5	40	M8 x 1.25 x 19 deep	1192	395
	Quintuple	19 k6	40	21.5	6	4	32	M6 x 1.0 x 16 deep	1204	401

* The input on the 803 unit is 14.5mm lower than the output

** All weights are approximate and exclude lubricant and packing

Fixing Bolts

Unit Size		Fasteners & Tightening Torque
861	Size	4 x M8 x 30mm long
	Nm	Tighten to - 25Nm
802	Size	4 x M12 x 40mm long
	Nm	Tighten to - 85Nm
862	Size	4 x M12 x 40mm long
	Nm	Tighten to - 85Nm
803	Size	4 x M12 x 40mm long
	Nm	Tighten to - 85Nm
863	Size	4 x M16 x 45mm long
	Nm	Tighten to - 200Nm
864	Size	4 x M16 x 60mm long
	Nm	Tighten to - 200Nm
865	Size	4 x M20 x 70mm long
	Nm	Tighten to - 350Nm
866	Size	4 x M24 x 80mm long
	Nm	Tighten to - 610Nm
867	Size	4 x M30 x 90mm long
	Nm	Tighten to - 1220Nm
868	Size	4 x M36 x 100mm long
	Nm	Tighten to - 2150Nm

Series M Gearboxes : Dimensions non motorised

Flange Mounted - Non Motorised

Quadruple/Quintuple reduction

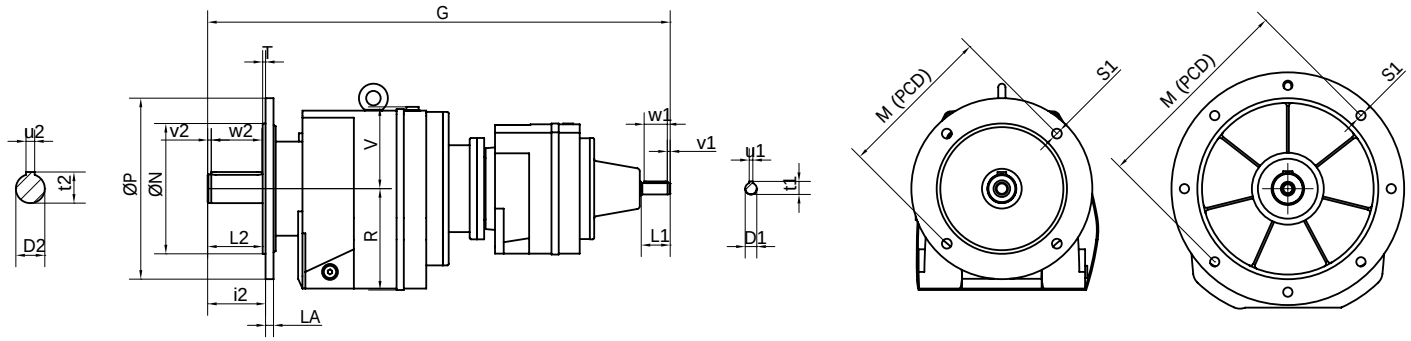

Unit Size	R	V	Flange Dimensions *						Output Shaft Dimensions							Optional Flanges (P)*		
			ØP	N	T	M	S1	LA	D	L	t1	u1	v1	w1	d1			
861	91	90	200	130	3.5	165	11.0	10	Ø25 k6	50	28.0	8	4	40	M10 x 1.5 x 22 deep	120	140	160
802	115	93	200	130	3.5	165	11.0	11	Ø30 k6	60	33.0	8	4	50	M10 x 1.5 x 22 deep	140	160	250
862	115	93	250	180	4.0	215	13.5	11	Ø35 k6	70	38.0	10	7	60	M12 x 1.75 x 28 deep	140	160	200
803	130	84	250	180	4.0	215	13.5	11	Ø35 k6	70	38.0	10	7	60	M12 x 1.75 x 28 deep	200	300	-
863	140	110	300	230	4.0	265	13.5	11	Ø40 k6	80	43.0	12	5	70	M16 x 2.0 x 36 deep	200	250	-
864	182	130	350	250	5.0	300	17.5	17	Ø50 k6	100	53.5	14	10	80	M16 x 2.0 x 36 deep	300	-	-
865	230	230	450	350	5.0	400	18.0	18	Ø60 m6	120	64.0	18	10	100	M20 x 2.5 x 42 deep	-	-	-
866	260	260	450	350	5.0	400	18.0	22	Ø70 m6	140	74.5	20	15	110	M20 x 2.5 x 42 deep	-	-	-
867	278	278	550	450	5.0	500	18.0	25	Ø90 m6	170	95.0	25	15	140	M24 x 3.0 x 50 deep	-	-	-
868	318	318	550	450	5.0	500	18.0	25	Ø100 m6	210	106	28	15	180	M24 x 3.0 x 50 deep	-	-	-

*Units are shown with standard flange size - see table for optional flange dimensions

Input Shaft

Unit Size		Input Shaft Dimensions							G	kg **
		D1	L1	t1	u1	v1	w1	d1		
861	Quadruple	16 k6	40	18.0	5	4	32	M5 x 0.8 x 12 deep	503	21
	Quintuple	16 k6	40	18.0	5	4	32	M5 x 0.8 x 12 deep	518	22
802	Quadruple	16 k6	40	18.0	5	4	32	M5 x 0.8 x 12 deep	571	33
	Quintuple	16 k6	40	18.0	5	4	32	M5 x 0.8 x 12 deep	584	34
862	Quadruple	16 k6	40	18.0	5	4	32	M5 x 0.8 x 12 deep	581	35
	Quintuple	16 k6	40	18.0	5	4	32	M5 x 0.8 x 12 deep	594	36
803	Quadruple	16 k6	40	18.0	5	4	32	M5 x 0.8 x 12 deep	602	40
	Quintuple	16 k6	40	18.0	5	4	32	M5 x 0.8 x 12 deep	615	41
863	Quadruple	16 k6	40	18.0	5	4	32	M5 x 0.8 x 12 deep	639	48
	Quintuple	16 k6	40	18.0	5	4	32	M5 x 0.8 x 12 deep	651	52
864	Quadruple	19 k6	40	21.5	6	4	32	M6 x 1.0 x 16 deep	751	96
	Quintuple	16 k6	40	18.0	5	4	32	M5 x 0.8 x 12 deep	759	98
865	Quadruple	19 k6	40	21.5	6	4	32	M6 x 1.0 x 16 deep	832	140
	Quintuple	16 k6	40	18.0	5	4	32	M5 x 0.8 x 12 deep	840	143
866	Quadruple	24 k6	50	27.0	8	5	40	M8 x 1.25 x 19 deep	956	204
	Quintuple	19 k6	40	21.5	6	4	32	M6 x 1.0 x 16 deep	968	209
867	Quadruple	24 k6	50	27.0	8	5	40	M8 x 1.25 x 19 deep	1077	279
	Quintuple	19 k6	40	21.5	6	4	32	M6 x 1.0 x 16 deep	1089	285
868	Quadruple	24 k6	50	27.0	8	5	40	M8 x 1.25 x 19 deep	1192	395
	Quintuple	19 k6	40	21.5	6	4	32	M6 x 1.0 x 16 deep	1204	401

Optional Flange Dimensions

ØP	120	140	160	200	250	300
N	80	95	110	130	180	230
T	3.0	3.0	3.5	3.5	4.0	4.0
M	100	115	130	165	215	265
S1	6.6	9.0	9.0	11.0	13.5	13.5
LA	9	9	10	10	11	11

Series M Gearboxes : Exact Gear Ratios

DOUBLE, TRIPLE, QUADRUPLE AND QUINTUPLE REDUCTION RATIOS – nominal output speeds based on an input speed of 1440 rev/min

Code	Nominal Output Speed Rev/Min	860	801	861	802	862	803	863	864	865	866	867	868
01	1029	-	-	-	-	-	-	-	-	1.479	1.442	-	-
02	800	-	-	-	-	-	-	-	-	2.036	2.015	-	-
03	655	-	-	-	-	-	-	-	-	2.282	2.191	-	-
04	576	-	-	-	-	-	-	-	-	2.562	2.489	-	-
05	514	-	-	-	-	-	-	-	-	2.969	2.992	2.904	2.888
06	450	-	-	-	-	-	-	-	-	3.301	3.242	3.189	3.247
07	400	-	-	-	-	-	-	-	-	3.688	3.500	3.638	3.822
08	360	-	-	-	-	-	-	-	-	4.088	4.179	4.025	4.029
09	400	3.750	3.589	3.589	3.585	3.585	-	3.678	3.678	4.582	4.545	4.421	4.537
10	288	5.066	5.034	5.034	5.040	5.040	4.438	5.094	5.214	5.073	4.938	5.042	5.333
11	257	5.762	5.547	5.547	5.649	5.649	6.240	5.722	5.792	5.686	5.370	5.538	6.005
12	229	6.528	6.299	6.299	6.341	6.341	6.994	6.292	6.442	6.628	6.724	6.210	6.548
13	203	-	-	-	-	-	-	-	-	7.404	7.260	6.879	7.270
14	180	8.348	8.000	8.000	8.053	8.053	7.851	8.218	8.330	8.224	7.945	7.779	8.667
15	160	8.997	9.088	9.088	9.129	9.129	9.970	9.344	9.352	9.188	8.578	8.618	9.623
16	144	-	-	-	-	-	-	-	-	10.266	10.587	9.891	10.065
17	131	11.359	11.154	11.154	10.887	10.887	11.302	11.346	11.469	11.705	11.984	11.200	11.429
18	120	12.877	12.371	12.371	12.536	12.536	13.479	12.481	12.923	12.739	12.509	12.391	13.322
19	103	14.715	14.054	14.054	14.580	14.580	15.520	14.342	15.043	14.525	14.161	14.031	15.127
20	90	16.369	15.968	15.968	16.312	16.312	18.051	16.263	16.686	16.591	16.426	15.969	16.429
21	80	18.047	17.584	17.584	17.386	17.386	20.196	17.938	18.261	18.433	18.253	18.000	18.112
22	72	19.861	20.226	20.226	20.605	20.605	21.526	20.543	20.659	20.588	19.409	20.005	21.745
23	65	23.269	21.989	21.989	22.000	22.000	25.511	23.226	23.320	22.874	21.568	22.549	23.974
24	58	-	-	-	-	-	-	-	-	26.037	26.029	25.455	26.071
25	51	27.917	26.397	26.397	27.300	27.300	27.238	26.928	28.269	28.744	29.992	28.350	28.247
26	45	32.542	31.677	31.677	32.192	32.192	33.800	32.118	32.967	32.310	30.756	31.888	34.509
27	40	36.157	35.692	35.692	35.250	35.250	39.857	35.173	36.213	35.669	35.438	35.515	37.388
28	36	-	-	-	-	-	-	-	-	40.252	37.059	39.008	39.420
29	32	43.542	41.492	41.492	43.200	43.200	43.643	42.208	44.379	44.438	42.700	43.445	42.709
30	29	49.907	47.094	47.094	48.150	48.150	53.486	48.562	48.462	49.069	47.929	48.629	51.273
31	26	56.719	53.538	53.538	54.000	54.000	59.614	53.957	55.804	55.176	51.494	51.738	57.515
32	23	-	-	-	-	-	66.857	-	-	61.131	57.750	59.488	58.569
33	20	-	-	-	-	-	-	-	-	68.740	62.045	63.291	65.700
41	36	-	-	-	-	-	-	-	-	-	-	39.930	41.360
42	32	-	-	-	-	-	-	-	-	-	-	44.180	48.210
43	29	-	-	-	-	-	-	-	-	-	-	50.020	54.750
44	26	58.461	57.027	57.027	58.382	58.382	-	58.950	60.330	59.846	60.229	56.932	59.456
45	23	64.453	62.872	62.872	64.290	64.290	72.282	62.834	66.020	66.489	66.928	64.174	65.549
46	20	70.933	69.193	69.193	73.950	73.950	79.598	74.467	74.691	74.265	71.167	71.321	78.698
47	18	83.104	81.066	81.066	80.397	80.397	91.557	79.507	84.310	82.508	79.082	80.394	86.763
48	16	-	-	-	-	-	-	-	-	93.918	95.441	90.751	94.354
49	14	99.702	97.257	97.257	96.516	96.516	99.540	98.661	102.204	103.683	109.969	101.074	102.226
50	13	116.220	113.370	113.370	115.819	115.819	119.496	116.342	119.188	116.546	112.773	113.688	124.890
51	12	129.134	125.967	125.967	130.500	130.500	143.395	127.392	130.924	128.664	129.940	126.620	135.311
52	10	-	-	-	-	-	-	-	-	145.196	135.882	139.073	142.663
53	9.00	155.506	151.692	151.692	151.706	151.706	161.571	156.123	160.446	160.292	156.567	154.892	154.566
54	8.00	178.241	173.870	173.870	172.188	172.188	187.827	174.012	175.207	176.998	175.738	173.374	185.558
55	7.20	202.567	197.599	197.599	195.750	195.750	213.185	195.154	201.754	199.029	188.810	184.459	208.150
56	6.40	-	-	-	-	-	242.360	-	-	220.508	211.750	212.086	211.965
57	5.76	-	-	-	-	-	-	-	-	247.956	227.500	225.646	237.771
60	6.40	.	.	235.00	232.81	232.81	215.23	229.00	228.91	231.06	220.22	226.98	246.73
61	5.76	.	.	261.40	260.47	260.47	237.02	259.68	258.98	258.09	242.24	249.68	271.40
62	5.14	.	.	287.80	277.62	277.62	272.91	286.42	301.21	300.18	278.36	286.90	311.86
63	4.80	.	.	317.30	305.72	305.72	313.91	315.41	337.01	335.85	315.65	325.33	353.64
64	4.00	.	.	365.00	362.30	362.30	365.10	361.21	359.21	357.95	348.16	358.84	390.06
65	3.60	.	.	401.70	416.80	416.80	396.93	415.49	425.69	424.23	398.71	410.95	446.71
66	3.20	.	.	436.70	445.00	445.00	444.10	469.77	480.51	471.32	443.06	463.22	492.49
67	2.88	.	.	511.70	483.80	483.80	533.10	510.72	513.04	503.22	500.94	523.74	556.83
68	2.22	.	.	614.20	600.30	600.30	568.20	592.12	621.90	624.40	580.78	607.22	645.58
69	1.97	.	.	736.90	720.70	720.70	681.90	710.80	771.80	736.20	692.72	724.25	770.01
70	1.67	.	.	884.30	849.80	849.80	808.10	847.80	900.00	882.10	828.21	858.69	801.52
71	1.44	.	.	1031.00	1020.00	1020.00	972.20	1017.00	1061.00	1040.00	987.84	1024.19	929.27
72	1.31	.	.	1161.00	1117.00	1117.00	1130.00	1114.00	1166.00	1148.00	1138.21	1140.70	1108.37
73	1.11	.	.	1291.00	1258.00	1258.00	1402.00	1255.00	1277.00	1340.00	1246.00	1249.19	1213.79
74	0.96	.	.	1500.00	1542.00	1542.00	1592.00	1506.00	1564.00	1580.00	1540.00	1528.11	1502.21
75	0.80	.	.	1807.00	1792.00	1792.00	1877.00	1751.00	1917.00	1730.00	1686.00	1834.00	1802.65
76	0.72	.	.	2051.00	1998.00	1998.00	2055.00	2015.00	2094.00	2120.00	2023.00	2110.00	2074.02
77	0.60	.	.	2350.00	2268.00	2268.00	2337.00	2287.00	2333.00	2363.00	2327.00	2345.00	2304.47
78	0.53	.	.	2671.00	2578.00	2578.00	2519.00	2600.00	2617.00	2650.00	2586.00	2889.00	2844.00

Double reduction
Triple reduction
Quadruple reduction
Qunituple reduction

Series M Gearboxes : Exact Gear Ratios

Code	Nominal Output Speed Rev/Min	860	801	861	802	862	803	863	864	865	866	867	868
80	0.53	.	.	2632	2655	2655	2649	2619	2728	2598	2446	2536	2743.72
81	0.45	.	.	3068	3095	3095	3088	3053	3274	3119	3035	3146	3404.7
82	0.40	.	.	3681	3650	3650	3832	3641	3818	3742	3579	3710	4015
83	0.36	.	.	4091	4055	4055	4258	4046	4302	4216	3919	4062	4396
84	0.31	.	.	4609	4440	4440	5021	4431	4726	4655	4515	4525	4969
85	0.26	.	.	5550	5347	5347	6046	5335	5494	5411	5533	5545	5441
86	0.22	.	.	6452	6553	6553	6620	6403	6733	6742	6106	6783	6668
87	0.19	.	.	7396	7511	7511	7588	7339	7641	7652	7483	7561	7432
88	0.17	.	.	8394	8372	8372	8624	8443	8344	8449	8340	8479	8335
89	0.15	.	.	9540	9514	9514	9300	9596	9486	9605	9354	9490	10192
90	0.14	.	.	10845	10670	10670	10569	10662	10924	11966	10048	10097	11430

Double reduction
Triple reduction
Quadruple reduction
Qunituple reduction

B14 Face Mounting

Size	Type	ØR h6	e5	i3	f7
860	4 holes	52	75 pcd	54	M8 x 1.25 x 12 deep
801	4 holes	75	96 pcd	62	M8 x 1.25 x 15 deep
861	4 holes	75	96 pcd	62	M8 x 1.25 x 15 deep
802	4 holes	85	105 pcd	74	M12 x 1.75 x 21 deep
863	4 holes	85	105 pcd	84	M12 x 1.75 x 21 deep
803	6 holes	102	124 pcd	84	M12 x 1.75 x 21 deep
863	6 holes	102	124 pcd	94	M12 x 1.75 x 21 deep
864	8 holes	145	170 pcd	120	M12 x 1.75 x 21 deep

Note: Foot mounted units can also be supplied with B14 face mounting but do not come supplied as standard. Please consult your local authorised distributor

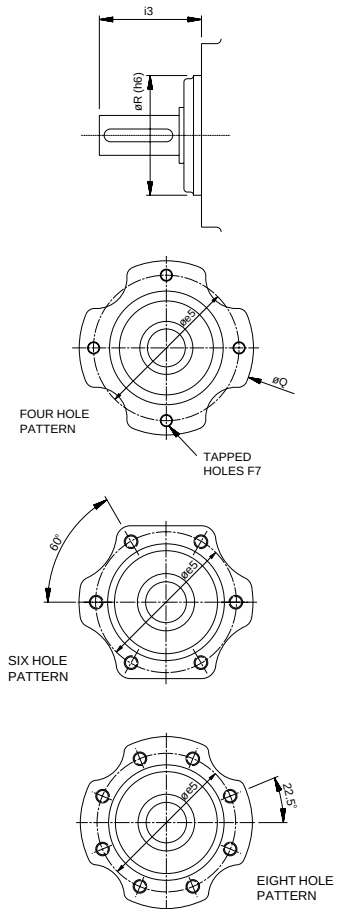

Series M Gearboxes : Overhung Load Capacities

ALLOWABLE OVERHUNG LOADS

Units are fitted with input and output bearings of ample proportions to cater for the radial and thrust loads imposed by the gear loads, leaving sufficient capacity for taking overhung loads.

The calculated overhung load should be compared with the value in the selection tables.

These values may be exceeded at lower input speeds or if limited bearing lives are acceptable. In cases where higher overhung load capacities are necessary consult your distributor, quoting details of power, speed, direction of gearbox rotation, angle of application of load, distance of load application from gearbox and acceptable bearing life.

Permissible overhung loads vary according to the direction of rotation. The values tabulated are for the most unfavourable direction with the unit transmitting full rated power and the load applied midway along the shaft extension. Hence they can sometimes be increased for a more favourable direction of rotation, or if the power transmitted is less than the rated capacity of the gear unit, or if the load is applied nearer to the gear unit case. Refer to your Distributor for further details. In any event, the sprocket, gear etc. should be positioned as close as possible to the gear unit case in order to reduce bearing loads and shaft stresses, and to prolong life.

All units will accept 100% momentary overload on stated capacities.

To determine the overhung load when a sprocket, gear or 'V' pulley is fitted to either shaft, one of the following formulae may be used in the absence of accurate information.

(1) Calculation on a basis of Torque

$$\text{Overhung load (N)} = \frac{M_2 \times 1000 \times K}{r}$$

(2) Calculation on a basis of Power

$$\text{Overhung load (N)} = \frac{M_2 \times 9550 \times 1000 \times K}{n_2 \times r}$$

Where:

M_2 = Absorbed torque at shaft in Nm.
P_2 = Absorbed power at shaft in (kW).
r = Pitch radius of sprocket, gear or 'V' pulley in mm.
n_2 = Rev/min of shaft
K = Application factor -
1.00 for a sprocket
1.25 for a gear or timing pulley
1.50 for a 'V' pulley

Overhung loads may be reduced by one of the following methods:

(1) Increase the diameter of the sprocket, gear or pulley within reasonable limits.

(2) Mount the sprocket, gear or pulley on a separate shaft, supported with bearings and couple to the output shaft by means of a Fenner shaft coupling.

(3) Use a special extended output shaft and support the free end with an outrigger bearing.

Axial Thrust Capacities (N)

No check or calculation is required for axial loads towards or away from the unit up to 50% of the permissible overhung load. If the axial thrust exceeds these values or if there is a combination of axial thrust loads and overhung loads please refer to your local Authorised Distributor.

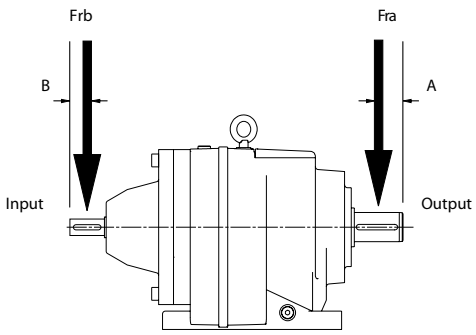

Output shaft dimensions refer to both motorised and non motorised units.

DISTANCE MIDWAY ALONG SHAFT EXTENSION

Size of Unit	No of Reductions	Dimension A (mm)	Dimension B (mm)
860	2 - 3	20	20
801	2 - 3	25	20
861	2 - 5	25	20
802	2 - 5	30	20
862	2 - 5	35	20
803	2 - 5	35	20
863	2	40	25
	3	40	20
	4 - 5	40	20
864	2	50	30
	3	50	25
	4 - 5	50	20
865	2	60	40
	3	60	30
	4 - 5	60	20
866	2	70	55
	3	70	40
	4-5	70	25
867	2 - 3	85	55
	4	85	25
	5	85	20
868	2 - 3	105	55
	4	105	25
	5	105	20

ALLOWABLE INPUT SHAFT OVERHUNG LOADS Frb (kN) @1450 REV/MIN

Unit Size	2 Stage	3 Stage	4 Stage	5 Stage
860	1.50	1.65	-	-
801	1.65	1.75	-	-
861	1.56	1.75	1.50	1.50
802	1.20	1.50	1.50	1.50
862	1.10	1.50	1.50	1.50
803	0.90	1.50	1.50	1.50
863	1.65	1.80	1.50	1.50
864	1.50	2.25	1.75	1.75
865	1.50	3.50	1.75	1.75
866	2.55	4.20	2.25	2.25
867	6.90	12.00	2.25	2.25
868	7.10	12.00	2.25	2.25

* For Output Shaft Overhung Load Capacities see the relevant selection tables

Series M Gearboxes : Installation and Maintenance

INSTALLATION

Freedom from vibration and correct alignment are the two main points to be considered when installing Gearmotors. Attention to these points will prolong the life and efficiency of the entire drive.

The shafts of the prime mover, unit and driven equipment, should be in as perfect alignment as possible. Misaligned shafts impose abnormal stress on bearings and couplings, leading to excessive wear and possibly early failure.

Vibration accelerates bearing and gear wear, resulting in noisy operation. Alignment can be maintained and vibration eliminated, by mounting the drive on rigid foundations of adequate proportions and dowelling the units in position.
Fenaflex couplings are recommended when the shaft alignment cannot be assured and also when protection from peak and vibratory torques is desirable. After installation, regular inspection should be carried out to check the tightness of the fixing bolts and also the accuracy of alignment.

LUBRICANT TYPE TEMPERATURE RANGE

ISO Viscosity	Ambient Temperature °C			
	-5°C to 20°C	-30°C to 20°C	0°C to 35°C	20°C to 50°C
EP Mineral Oil	220	-	320	460
Synthetic Oil 1	-	220	220	320
Synthetic Oil 2	-	220	320	460

Synthetic Oil 1 = Polyalphaolein based. Synthetic Oil 2 = Polyglycol based
The recommended lubricants for Series M are EP mineral oil or synthetic oil type 1.

LUBRICATION

Gearmotors and Reducers

Sizes 860 to 863

Sizes 860 to 863 are supplied ready filled with the required amount and type of lubricant for the mounting position identified in the original order.
Note: If the unit is to be mounted in a different position to that originally intended then the amount of lubricant in the unit will require amending - see table below for required quantities.

Sizes 864 to 868

Sizes 864 to 868 are despatched without oil and should be filled prior to installation. The different mounting positions are indicated below and the tables show the appropriate oil levels. The units have several oil fill and drain plug locations to cater for all mounting positions.

LUBRICANT RENEWAL INTERVALS

Unit Op Temp °C	Renewal Period (Hours)	
	Mineral Oil	Synthetic Oil
75 or less	17000 or 3 yrs	26000 or 3 yrs
80	12000 or 3 yrs	26000 or 3 yrs
85	8500 or 3 yrs	21000 or 3 yrs
90	6000 or 2 yrs	15000 or 3 yrs
95	4200 or 17 mths	10500 or 3 yrs
100	3000 or 12 mths	7500 or 2.5 yrs
105	2100 or 8 mths	6200 or 2 yrs
110	1500 or 6 mths	2100 or 18 mths

Oil Changes

Sizes 860 to 863 units are lubricated for life with EP 320 mineral oil. Units that are required to work in an ATEX environment require draining and relubricating in accordance with a separate ATEX installation leaflet.

Sizes 864 to 868 require an oil change after the first 1000 hours operation. Subsequent oil changes should be carried out in line with the table below, depending on your operating temperature.

Do not mix mineral and synthetic lubricants. Do not overfill the unit as this can result in leaking and high running temperatures.

All plugs should be fitted in the correct position and should be torque tightened in accordance with the table below.

BREATHERS/MOUNTING POSITIONS

Sizes 860,801 and 861 are supplied for operation without breathers.

Sizes 802 to 863 are supplied for operation with breathers. To prevent leakage during transit these units are fitted with blanking plugs. It is essential that when the unit is in its operating position the relevant blanking plug is removed and replaced by the breather plug (supplied) in the position indicated on the installation leaflet.

Sizes 864 to 868 are supplied for operation fitted with a breather but are despatched without oil.

LUBRICANT QUANTITIES (LITRES)

ISO Viscosity	860		801		861		802		862		803		863		864		865		866		867		868	
	Double	Triple	Double	Triple	Double	Triple	Double	Triple	Double	Triple	Double	Triple	Double	Triple	Double	Triple	Double	Triple	Double	Triple	Double	Triple	Double	Triple
B3/B5	0.5	0.6	0.8	0.8	0.8	0.8	1.5	1.6	1.5	1.6	2.0	2.1	2.6	2.7	4.2	4.4	10.5	11.5	14	15	17	18	24	24.5
B7	0.8	0.9	1.2	1.3	1.2	1.3	1.8	1.9	1.8	1.9	2.0	2.1	2.9	3.0	6.3	6.5	12.0	12.0	22	24	31	33	49	50
B6	0.6	0.7	0.7	0.7	0.7	0.7	1.6	1.7	1.6	1.7	1.9	2.0	2.7	2.8	5.4	5.6	12.0	12.0	22	24	31	33	49	50
B8	0.8	0.9	1.2	1.2	1.2	1.2	1.8	1.9	1.8	1.9	1.7	1.8	3.0	3.1	7.3	7.5	12.0	12.0	19	21	28	30	41	43
V1/V5	0.7	0.7	1.1	1.1	1.1	1.1	2.0	2.1	2.0	2.1	2.2	2.3	3.2	3.3	6.8	6.8	16.8	16.8	32	32	47	47	72	72
V3/V6	1.0	1.1	1.4	1.6	1.4	1.6	2.6	2.7	2.6	2.7	2.8	2.9	4.7	4.8	9.3	9.7	16.4	16.5	26	28	38	40	65	67
Plug Size	M10		M10		M10		M10		M10		M10		M14		M16		M16		M16		M22		M22	

* For quadruple and quintuple reduction fill quantities please consult your local Authorised Distributor

MOUNTING POSITIONS

Mounting B3

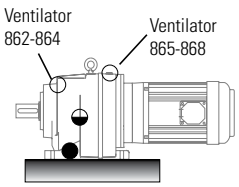

Mounting B8

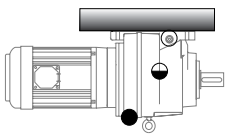

Mounting V5 †

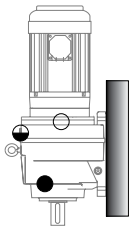

Mounting V6 †*

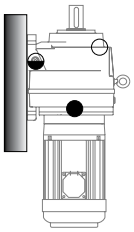

Mounting V3 †*

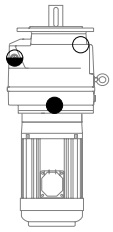

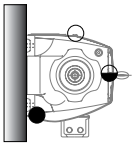

Mounting B6

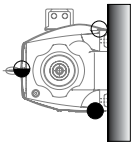

Mounting B7

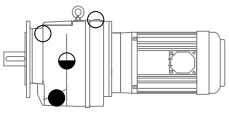

Mounting B5

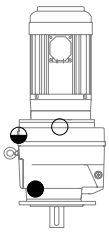

Mounting V1

○ Ventilator/Filling Position ◒ Level Position ● Drain Position

† Gear units for use in mounting positions V1, V3, V5 and V6 should only be selected with overall ratios greater than or equal to those shown in the table below.
* Mounting positions V3 & V6 are not recommended for geared motors. Please consult your local authorised distributor.

Unit Size	Input Speed (rpm)			
	1000	1500	1800	>1800
860-864	All	All	All	Consult you local distributor
865	2:1	4:1	4.5:1	
866	4:1	8:1	9:1	
867	6.3:1	11:1	14:1	
868	12:1	18:1	22:1	

Series M Gearboxes : Ordering Instructions

All gearboxes and geared motors are identified by an eight digit code for a unit with a standard electric motor, if a special motor type is required a ninth digit is added to the end of the normal code. These codes should be included on all enquiries, correspondence and orders.
The code is made up as follows:-

First THREE digits: Gearmotor type and size.

Select from the tables on pages 182-198 and 204-209.

Fourth digit: Type of assembly required

A: Foot mounted motorised
B: Flange mounted motorised
D: Foot mounted with input shaft
E: Flange mounted with input shaft
G: Foot mounted - motor ready
H: Flange mounted - motor ready

Fifth/Sixth digit: Ratio code

1. Assemblies A and B use the complete eight digit code obtained directly from the selection tables.
2. Exact gear ratios can be found on page 214.
3. For selection and specification of D & E reducer units, select from tables on page 204-209 and create code as shown.
4. For selection of motor ready units (types G & H) use motor selection tables and replace motor codes with frame codes.

Seventh/Eighth digit: Type of drive code

1. Motorised units - use complete code from selection tables with if applicable, additional ninth digit for motor type.
2. Input Reducer assembly - use 00.
3. Motor ready units are supplied to fit standard IEC motors. Insert frame code from the table below.

For frame size of motor please refer to motor table on 314.

Code	Frame	Flange
63C	63	B14
63D	63	B5
71C	71	B14
71D	71	B5
80C	80	B14
80D	80	B5
90C	90	B14
90D	90	B5
10C	100	B14
10D	100	B5
11C	112	B14
11D	112	B5
13C	132	B14
13D	132	B5
16D	160	B5
18D	180	B5
20D	200	B5
22D	225	B5
25D	250	B5

Ninth digit: Type of motor variant

Use eight digit code obtained from selection tables for required motor power and speed and then add the relevant letter code from table below of the motor variant required.

ELECTRIC MOTOR VARIANTS

All variants of standard IEC motors can be fitted to Fenner Gearmotors, Series M is also capable of accepting NEMA motor variants as well.

Examples of some of the variants and their ninth digit code letter are:-

Code	Additional Feature
A	Anti-condensation heaters fitted
B	Backstop Fitted
M	Brake motor
N	Brake motor with Hand Release
Q	Refer to Original Quote - Special
S	Single Phase motor
T	Fitted with Thermistors
X	Fitted with Variator
Z	Fitted with Force Vent unit

Standard clutch brake modules with IEC flanges can be fitted between motor and gearhead. Refer to page 176 for more details).

Variable speed packages are available using mechanical disc variators or Fenner QD inverters. Refer to page 146 and 177 for more details.

Backstop modules are available for motor frame sizes 100 to 200. Refer to page 312 for more details.

Brake motors please refer to age 174.

Force vent please refer to page 175.

For any of these combinations please contact your local Authorised Distributor.

The mounting position should always be specified at the time of order.

Section 9:

Gearboxes: Series C

Modern design techniques enable the Fenner® Series C Helical Worm gear unit to out perform any other gearbox in terms of lowest cost /Nm.

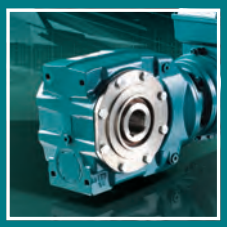

- Drives up to 45kW
- Energy efficient right angled drive
- Versatile mounting
- Ratios from 8:1 to 13,500:1 off the shelf
- Dimensionally interchangeable with the market leaders
- Accepts standard IEC motors without modification
- ATEX certification available

Geared Drives: Design Data Required	
Motorised (integral motor) or non-motorised?	> If motorised: electrical supply available any special motor features required (brake, thermistors, flameproof etc.) > type of prime mover rotational speed of prime mover power rating of prime mover is an input shaft coupling required? if so, prime mover shaft dia.
Foot, flange or shaft mounted?	> If shaft mounted, machine shaft diameter/length > if foot mounted, is an output shaft coupling required?
Type of driven machine	
Rotational speed of driven machine	> constant or variable over what range?
Power absorbed by driven machine (or required output torque)	
Hours/day duty & start/stop frequency	

Series C	Page
Motorised Selection	221
Motorised Dimensions	228
Non Motorised Selection	229
Non Motorised Dimensions	230
Exact Ratios	232
Accessories	233
Overhung Load Capacities	234
Ordering Instructions	234
Installation & Maintenance	235

Visit www.fptgroup.com

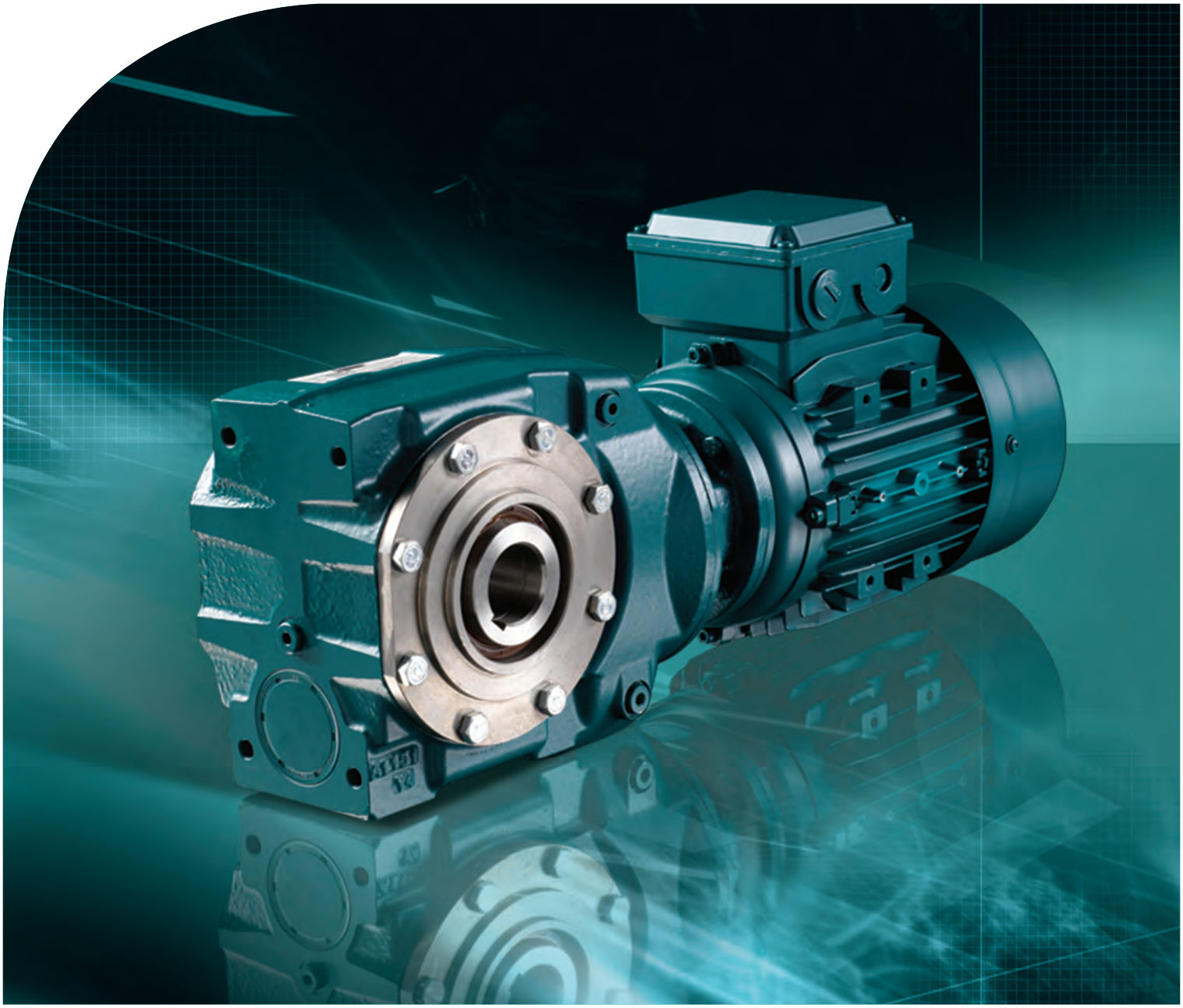

SERIES C

Highly Efficient, Versatile Compact Solutions

- Energy efficient right angled drive
- Dimesionally interchangeable with market leaders
- Versatile mounting
- Oil tight gearhead enables motor removal without modification
- Accepts standard IEC motors without oil spillage
- Ratios from 8:1 to 13,500:1

Fenner®

THE MARK OF ENGINEERING EXCELLENCE

www.fptgroup.com

Series C Gearboxes : Motorised selection

(a) Absorbed Power
Calculate absorbed power (kW) to drive designated machine P.

(b) Absorbed Torque
Determine the absorbed torque and speed required by the driven machine. If the required output torque is not known it can be calculated using the following formula:

$$M = \frac{P_2 \times 9550}{n_2}$$

M = required output torque (Nm)
P_2 = absorbed power (kW)
n_2 = machine speed (rev/min)

(c) Service Factor
From Table 1 select the Mechanical Service Factor (Fm) applicable to the drive.
If the unit is to be subjected to frequent stop/starts in excess of 10 times per day then multiply factor Fm by Factor Fs from table 2.

(d) Motor Power
Refer to the selection tables and choose closest motor power above the required absorbed power then find the nearest available output speed to that required. Ensure it has sufficient output torque, if not, move to next motor size.

(e) Unit Selection
At the selected output speed read downwards to the first unit with an output torque in excess of the absorbed torque from step (b). Read across to column 3 and check if the service factor exceeds the value from step (c).
If maximum service factor equals or exceeds the value from step (c) read across to unit selection column, this gives the relevant product code. If the value from step (c) exceeds the service factor read down to the first service factor to equal or exceed the value from step (c) and read across to the unit selection column.

(f) Overhung Loads
If the unit is to be fitted with an output shaft and an indirect drive attached to the shaft, calculate the overhung load value using the formula on page 234 and compare this value with the maximum allowable value given in column 5 of the selection tables. If the value exceeds the maximum allowed, then either re-design the indirect drive or select a larger unit capable of supporting the overhung load.

(g) Shaft Mounted
From the relevant dimension pages determine the required machine shaft diameter. There are several bore options on most of the range.

NOTE:
(i) The output speeds in the selection table assume nominal motor speeds. In order to determine the exact output speeds of the unit refer to the motor details on page 314.
(ii) For exact ratios of series C units refer to page 234.

TABLE 1 - MECHANICAL SERVICE FACTOR (Fm)

Types of Driven Machine	Operational Hours		
	Under 3	3 to 10	Over 10
Uniform Loads Agitators and Mixers – liquid or semi-liquid Blowers – centrifugal Bottling Machines Conveyors and Elevators – uniformly loaded Cookers Laundry Washing Machines – non-reversing Line Shafts Pumps – centrifugal and gear Wire Drawing Machines	0.80	1.00	1.25
Moderate Shock Loads Agitators and Mixers – variable density Conveyors – not uniformly loaded Cranes travel motion and hoisting Drawbench Feeders – pulsating load Hoists Kilns Laundry Tumblers Lifts Pumps – reciprocating with 3 or more cylinders Pump and Paper Making Machinery Rubber Mixers and Calendars Screens – rotary Textile Machinery	1.00	1.25	1.50
Heavy Shock Loads Brick Presses Briquetting Machines Conveyors – reciprocating and shaker Crushers Feeders – reciprocating Hammer Mills Pumps – reciprocating, 1 or 2 cylinders Rubber Masticators Screens – vibrating	1.50	175	2.00

TABLE 2 - STARTING FACTOR (Fs)

	Start/stops per hour					
	Up to 1	5	10	40	60	>200
Factor Fs	1.00	1.03	1.06	1.10	1.15	1.20

For ATEX certified gear units please consult your local Authorised Distributor.

EXAMPLE
A Series C motorised shaft mounted gear unit is required for a uniformly loaded conveyor which absorbs 5.7 kW at 46 rpm when running for up to 16 hours/day during which it stops and starts 8 times.

(a) Absorbed power is 5.7kW

(b) Torque = $\frac{5.7 \times 9550}{46} = \underline{1183\ \text{Nm}}$

(c) From table 1 service factor is 1.25.
The machine stops and starts only 8 times a day therefore an additional stop/start factor is not required.

(d) Closest motor power above 5.7kW is 7.5kW and the nearest available speed is 46 rev/min.

(e) First unit with output torque in excess of 1183 Nm is capable of 1424 Nm and has a maximum service factor of 1.37. Service factor exceeds 1.25 from step (c) therefore read across to unit selection column for product code, 875A1156.

(f) From column 5 the overhung load capacity is 37565 N. If an indirect drive is fitted calculate the load using the formula on page 234 and compare it with this value.

(g) Shaft diameter needs to be 70 mm.
So the standard bore option can be used.

Series C Gearboxes : Motorised selection

Double reduction
Triple reduction
Higher ratios are available on request.

0.18 KW MOTOR

Nominal Output Rev/Min	Output Torque Nm	Service Factor	Unit Selection	Overhung Load N
158	8	9.03	870A0102	2858
117	12	7.30	870A0202	2857
103	13	6.67	870A0302	2857
91	15	6.09	870A0402	2857
83	14	5.83	870A0502	2856
71	19	5.11	870A0602	2856
66	20	4.84	870A0702	2856
62	19	4.77	870A0802	2856
54	22	4.36	870A0902	2855
48	25	4.02	870A1002	2855
40	33	3.38	870A1102	2844
37	31	3.39	870A1202	2844
35	34	3.22	870A1302	2844
30	44	2.72	870A1402	2841
26	52	2.44	870A1502	2831
24	47	2.51	870A1602	2841
21	54	2.29	870A1702	2830
18	71	2.00	870A1802	2825
18	72	2.84	871A1802	5284
17	79	1.85	870A1902	2818
17	80	2.39	871A1902	5284
16	71	1.94	870A2002	2825
16	73	3.11	871A2002	5287
13	82	1.73	870A2102	2816
13	84	2.77	871A2102	5285
12	108	1.20	870A2202	2801
12	108	1.20	871A2202	5280
12	107	3.23	872A2202	7438
11	122	1.03	870A2302	2796
11	123	1.03	871A2302	5278
11	121	3.19	872A2302	7438
10	113	1.32	870A2402	2801
10	116	1.32	871A2402	5278
8.7	124	1.20	870A2502	2796
8.7	127	2.02	871A2502	5280
8.6	133	3.61	872A2502	7436
7.2	176	1.13	871A4502	5278
6.8	153	0.97	870A4602	2780
6.8	157	1.75	871A4602	5271
6.5	174	2.76	872A2602	7433
6.3	168	0.88	870A2602	2770
6.3	172	1.20	871A2602	5271
6.0	178	1.55	871A4702	5271
5.7	196	2.45	872A2702	7437
5.7	206	3.71	873A2702	11852
5.5	194	1.03	871A2702	5261
5.2	265	2.89	873A4802	11830
4.7	273	1.42	872A4902	7430
4.5	237	1.17	871A5002	5250
4.5	297	2.57	873A4902	11728
4.4	246	1.95	872A5002	7432
4.2	275	2.78	873A5002	11828
4.0	330	3.84	874A5102	28143
3.8	275	1.00	871A5102	5240
3.7	286	1.67	872A5102	7428
3.7	297	2.57	873A5102	11828
3.7	384	3.49	874A5202	27930
3.4	374	1.02	872A5202	7421
3.4	390	1.96	873A5202	11704
3.3	429	3.12	874A5302	29161
3.0	425	0.90	872A5302	7416
3.0	440	1.74	873A5302	11661
2.7	394	1.21	872A5402	7421
2.7	419	1.83	873A5402	11707
2.7	479	2.65	874A5402	29152
2.4	435	1.10	872A5502	7420
2.4	469	1.63	873A5502	11707
2.4	522	2.43	874A5502	29152
1.8	610	1.25	873A5602	11600
1.8	701	1.80	874A5602	29130
1.6	688	1.11	873A5702	11500
1.6	784	1.61	874A5702	29116

0.25 KW MOTOR

Nominal Output Rev/Min	Output Torque Nm	Service Factor	Unit Selection	Overhung Load N
159	12	6.64	870A0106	2856
118	16	5.37	870A0206	2855
104	18	4.90	870A0306	2854
92	21	4.48	870A0406	2854
84	20	4.29	870A0506	2853
72	27	3.76	870A0606	2852
66	28	3.56	870A0706	2852
62	27	3.51	870A0806	2852
54	31	3.21	870A0906	2849
48	34	2.95	870A1006	2849
41	46	2.49	870A1106	2837
38	43	2.49	870A1206	2837
38	44	3.98	871A1206	5286
35	47	2.37	870A1306	2837
35	47	3.78	871A1306	5286
30	62	2.00	870A1406	2831
30	61	3.35	871A1406	5285
26	72	1.79	870A1506	2821
26	71	2.92	871A1506	5281
24	66	1.85	870A1606	2831
24	66	2.96	871A1606	5283
21	75	1.69	870A1706	2818
21	74	2.70	871A1706	5281
19	98	2.09	871A1806	5277
19	99	3.83	872A1806	7437
18	99	1.47	870A1806	2808
17	110	1.36	870A1906	2804
17	109	1.76	871A1906	5277
17	111	3.45	872A1906	7436
16	99	1.43	870A2006	2808
16	99	2.29	871A2006	5284
13	115	1.27	870A2106	2800
13	114	2.04	871A2106	5279
13	137	2.91	872A4006	7433
12	149	0.88	870A2206	2780
12	151	0.98	870A4106	2780
12	147	0.88	871A2206	5269
12	154	1.31	871A4106	5268
12	145	2.70	872A2206	7435
12	156	2.55	872A4106	7430
11	138	1.07	870A4206	2790
11	142	1.68	871A4206	5271
11	164	2.34	872A2306	7436
11	151	3.25	872A4206	7427
11	173	3.05	873A2306	11838
10	151	0.97	870A2406	2780
10	148	1.00	870A4306	2780
10	156	1.61	871A2406	5269
10	162	2.97	872A2406	7436
8.9	169	0.88	870A2506	2770
8.7	172	1.46	871A2506	5264
8.7	181	2.65	872A2506	7431
8.2	234	3.27	873A4406	11817
7.6	253	3.02	873A4506	11796
7.5	243	1.61	872A4506	7427
7.0	222	2.16	872A4606	7430
6.5	252	3.03	873A2606	11817
6.3	233	0.88	871A2606	5250
6.3	235	2.04	872A2606	7425
5.7	265	1.82	872A2706	7434
5.7	280	2.73	873A2706	11796
5.6	354	3.78	874A4806	29152
5.2	335	1.16	872A4806	7424
5.2	360	2.12	873A4806	11748
5.1	386	3.46	874A4906	29143
4.7	372	1.04	872A4906	7419
4.7	404	1.89	873A4906	11644
4.4	335	1.44	872A5006	7424
4.4	374	2.05	873A5006	11744
4.4	422	3.01	874A5006	28013
4.1	449	2.82	874A5106	26909
3.8	390	1.24	872A5106	7214
3.8	404	1.89	873A5106	11744
3.7	522	2.56	874A5206	26449
3.5	530	1.44	873A5206	11592
3.3	584	2.29	874A5306	29117
3.0	599	1.28	873A5306	11500
2.8	535	0.90	872A5406	7400
2.8	651	1.95	874A5406	29096
2.7	569	1.34	873A5406	11600
2.6	710	1.79	874A5506	29096
2.4	637	1.20	873A5506	11600
1.9	953	1.32	874A5606	29048
1.7	1066	1.18	874A5706	29018

0.37 KW MOTOR

Nominal Output Rev/Min	Output Torque Nm	Service Factor	Unit Selection	Overhung Load N
161	18	4.49	870A0108	2852
119	24	3.63	870A0208	2850
105	27	3.31	870A0308	2849
92	30	3.03	870A0408	2849
84	30	2.90	870A0508	2847
72	39	2.54	870A0608	2844
67	41	2.41	870A0708	2844
63	39	2.37	870A0808	2844
63	41	3.78	871A0808	5286
56	45	2.17	870A0908	2840
56	46	3.47	871A0908	5284
49	50	2.00	870A1008	2840
49	52	3.21	871A1008	5284
41	67	1.68	870A1108	2826
41	68	2.82	871A1108	5280
38	63	1.68	870A1208	2826
38	65	2.69	871A1208	5282
35	68	1.60	870A1308	2826
35	70	2.55	871A1308	5282
30	90	1.35	870A1408	2815
30	91	2.26	871A1408	5282
26	104	1.21	870A1508	2805
26	105	1.97	871A1508	5274
25	96	1.25	870A1608	2815
25	98	2.00	871A1608	5278
21	108	1.14	870A1708	2799
21	110	1.82	871A1708	5274
19	143	0.99	870A1808	2780
19	145	1.41	871A1808	5266
19	147	2.59	872A1808	7434
17	159	0.92	870A1908	2780
17	161	1.19	871A1908	5266
17	165	2.33	872A1908	7432
17	171	3.55	873A1908	11909
16	143	0.97	870A2008	2780
16	146	1.54	871A2008	5280
16	159	3.00	872A2008	74342
14	169	1.38	871A2108	5270
14	171	2.82	872A2108	7429
13	200	1.02	871A4008	5255
13	215	1.82	872A2208	7432
13	204	1.96	872A4008	7427
13	230	2.74	873A2208	11797
12	228	0.89	871A4108	5249
12	232	1.72	872A4108	7422
11	210	1.14	871A4208	5255
11	243	1.58	872A2308	7434
11	219	2.19	872A4208	7424
11	257	2.06	873A2308	11780
10	232	1.09	871A2408	5250
10	225	1.09	871A4308	5250
10	240	2.00	872A2408	7434
10	235	2.05	872A4308	7422
10	257	2.97	873A2408	11780
8.9	279	2.74	873A2508	11780
8.8	268	1.79	872A2508	7424
8.8	340	3.94	874A4408	29139
8.7	255	1.00	871A2508	5240
8.7	309	1.28	872A4408	7416
8.2	346	2.21	873A4408	11741
8.2	361	3.71	874A4508	29145
7.5	360	1.09	872A4508	7416
7.5	375	2.04	873A4508	11701
7.2	389	3.05	874A4608	29145
7.0	316	0.87	871A4608	5230

Series C Gearboxes : Motorised selection

Nominal Output Rev/Min	Output Torque Nm	Service Factor	Unit Selection	Overhung Load N
7.0	329	1.46	872A4608	7422
6.5	349	1.38	872A2608	7412
6.5	373	2.05	873A2608	11741
6.2	449	2.71	874A4708	29127
6.1	375	1.29	872A4708	7416
5.8	392	1.23	872A2708	7430
5.8	415	1.84	873A2708	11701
5.6	523	2.56	874A4808	29109
5.2	533	1.44	873A4808	11609
5.1	572	2.34	874A4908	29091
4.7	599	1.28	873A4908	11500
4.5	496	0.97	872A5008	7410
4.4	624	2.03	874A5008	26917
4.3	553	1.38	873A5008	11600
4.1	665	1.91	874A5108	24796
3.9	577	0.84	872A5108	7390
3.9	599	1.28	873A5108	11600
3.7	773	1.73	874A5208	23910
3.5	784	0.98	873A5208	11400
3.3	864	1.55	874A5308	29041
2.8	963	1.32	874A5408	29001
2.6	1051	1.21	874A5508	29001
1.9	1411	0.89	874A5808	28909

0.55 KW MOTOR

Nominal Output Rev/Min	Output Torque Nm	Service Factor	Unit Selection	Overhung Load N
164	26	3.06	870A0116	2847
121	35	2.47	870A0216	2844
107	39	2.26	870A0316	2841
107	40	3.76	871A0316	5283
94	45	2.07	870A0416	2841
94	46	3.45	871A0416	5285
86	44	1.98	870A0516	2838
86	45	3.17	871A0516	5283
74	57	1.73	870A0616	2833
74	58	2.88	871A0616	5283
68	61	1.64	870A0716	2833
68	62	2.74	871A0716	5283
64	58	1.62	870A0816	2833
64	60	2.58	871A0816	5283
56	66	1.48	870A0916	2825
56	67	2.37	871A0916	5280
50	74	1.36	870A1016	2825
50	76	2.19	871A1016	5280
42	99	3.44	872A1116	7440
42	98	1.15	870A1116	2809
42	99	1.92	871A1116	5274
40	98	3.85	872A1216	7440
39	93	1.15	870A1216	2809
39	95	1.83	871A1216	5276
36	100	1.09	870A1316	2809
36	102	1.74	871A1316	5276
36	110	3.51	872A1316	7440
31	132	0.92	870A1416	2890
31	133	1.54	871A1416	5276
31	141	2.71	872A1416	7440
27	153	0.83	870A1516	2880
27	155	1.35	871A1516	5262
27	152	2.56	872A1516	7440
25	140	0.85	870A1616	2890
25	143	1.36	871A1616	5269
25	147	2.81	872A1616	7440
21	162	1.24	871A1716	5262
21	165	2.58	872A1716	7440
21	180	3.99	873A1716	11896
19	213	0.97	871A1816	5250
19	215	1.76	872A1816	7431
19	230	3.31	873A1816	11844
19	243	3.85	874A1916	29200
17	236	0.81	871A1916	5250
17	241	1.59	872A1916	7426
17	251	2.42	873A1916	11844
17	271	3.79	874A2016	29200

Nominal Output Rev/Min	Output Torque Nm	Service Factor	Unit Selection	Overhung Load N
15	233	2.05	872A2016	7426
15	250	3.06	873A2016	11844
15	303	3.45	874A2116	29200
14	250	1.92	872A2116	7422
14	265	2.88	873A2116	11844
14	330	2.94	874A2216	29200
13	316	1.24	872A2216	7426
13	338	1.87	873A2216	11724
11	357	1.08	872A2316	7430
11	376	1.41	873A2316	11695
11	366	2.64	874A2316	29200
10	352	1.37	872A2416	7430
10	377	2.03	873A2416	11695
10	413	2.71	874A2416	29200
9	394	1.22	872A2516	7412
9	409	1.87	873A2516	11695
9	454	2.51	874A2516	29200
8.3	529	2.53	874A4516	29106
7.3	571	2.08	874A4616	29106
6.7	511	0.94	872A2616	7392
6.7	548	1.40	873A2616	11626
6.7	612	1.96	874A2616	29200
6.3	658	1.85	874A4716	29075
6	609	1.26	873A2716	11558
6	678	1.80	874A2716	29200
6	699	3.61	875A2716	41900
5.5	782	0.98	873A4816	11400
5.5	767	1.74	874A4816	29044
5	838	1.60	874A4916	29013
4.3	915	1.39	874A5016	25273
4	975	1.30	874A5116	21625
3.7	1133	1.18	874A5216	20101
3.3	1266	1.06	874A5316	28926
2.8	1412	0.90	874A5416	28858
2.6	1540	0.82	874A5516	28858

0.75 KW MOTOR

Nominal Output Rev/Min	Output Torque Nm	Service Factor	Unit Selection	Overhung Load N
165	36	2.24	870A0118	2841
165	37	3.70	871A0118	5287
119	48	1.81	870A0218	2837
119	49	3.01	871A0218	5283
105	54	1.65	870A0318	2832
105	56	2.75	871A0318	5283
93	62	1.51	870A0418	2832
93	62	2.52	871A0418	5280
85	60	1.44	870A0518	2827
85	62	2.32	871A0518	5280
72	78	1.27	870A0618	2821
72	79	2.11	871A0618	5280
72	79	3.57	872A0618	7440
67	84	1.20	870A0718	2821
67	85	2.00	871A0718	5280
67	89	3.30	872A0718	7439
63	80	1.18	870A0818	2821
63	82	1.89	871A0818	5280
63	87	3.94	872A0818	7439
55	90	1.08	870A0918	2810
55	93	1.73	871A0918	5276
55	95	3.68	872A0918	7439
49	101	1.00	870A1018	2810
49	104	1.60	871A1018	5276
49	107	3.37	872A1018	7438
42	134	0.84	870A1118	2790
42	136	1.41	871A1118	5267
42	135	2.51	872A1118	7437
39	127	0.84	870A1218	2790
39	131	1.34	871A1218	5270
39	134	2.81	872A1218	7437
35	140	1.27	871A1318	5270
35	151	2.56	872A1318	7437
30	182	1.13	871A1418	5270
30	193	1.98	872A1418	7437
30	205	3.38	873A1418	11868

Nominal Output Rev/Min	Output Torque Nm	Service Factor	Unit Selection	Overhung Load N
26	212	0.98	871A1518	5250
26	208	1.87	872A1518	7435
26	218	3.24	873A1518	11848
26	222	3.96	874A1518	29187
25	196	1.00	871A1618	5260
25	201	2.06	872A1618	7435
25	215	3.24	873A1618	11878
22	222	0.91	871A1718	5250
22	226	1.89	872A1718	7433
22	247	2.91	873A1718	11848
22	262	3.70	874A1718	29182
19	295	1.29	872A1818	7427
19	314	2.42	873A1818	11771
19	304	3.04	874A1818	29182
19	333	2.81	874A1918	29176
17	330	1.16	872A1918	7420
17	344	1.77	873A1918	11771
15	319	1.50	872A2018	7420
15	342	2.24	873A2018	11771
15	371	2.77	874A2018	29175
14	343	1.41	872A2118	7414
14	363	2.11	873A2118	11771
14	415	2.52	874A2118	29175
13	432	0.91	872A2218	7420
13	409	0.98	872A4018	7407
13	462	1.37	873A2218	11642
13	452	2.15	874A2218	29175
12	465	0.86	872A4118	7395
11	440	1.09	872A4218	7401
11	515	1.03	873A2318	11600
11	516	1.64	873A4218	11690
11	502	1.93	874A2318	29163
10	472	1.02	872A4318	7395
10	516	1.48	873A2418	11600
10	566	1.98	874A2418	29157
10	578	3.99	875A2418	41882
9	539	0.89	872A2518	7400
9	560	1.37	873A2518	11600
9	621	1.83	874A2518	29157
9	633	3.71	875A2518	41883
8	710	1.10	873A4418	11500
8	725	1.85	874A4518	29603
7	749	1.02	873A2618	11500
7	700	1.09	873A4618	11500
7	838	1.43	874A2618	29127
7	836	2.95	875A2618	41867
6	833	0.92	873A2718	11500
6	928	1.31	874A2718	29090
6	957	2.64	875A2718	41875
5	1050	1.28	874A4818	28971
4	1252	1.01	874A5018	23447
3.5	1550	0.86	874A5218	15869

Series C Gearboxes : Motorised selection

Double reduction
Triple reduction

Higher ratios are available on request.

1.1 KW MOTOR

Nominal Output Rev/Min	Output Torque Nm	Service Factor	Unit Selection	Overhung Load N
165	53	1.52	870A0124	2831
165	54	2.51	871A0124	5286
165	53	3.88	872A0124	7440
120	71	1.23	870A0224	2824
120	72	2.04	871A0224	5279
120	74	3.20	872A0224	7440
105	80	1.12	870A0324	2817
105	82	1.87	871A0324	5280
105	81	3.02	872A0324	7440
93	91	1.03	870A0424	2817
93	92	1.71	871A0424	5275
93	92	2.80	872A0424	7438
85	88	0.98	870A0524	2810
85	91	1.57	871A0524	5275
85	93	3.41	872A0524	7440
72	115	0.86	870A0624	2800
72	117	1.43	871A0624	5275
72	116	2.42	872A0624	7440
68	123	0.82	870A0724	2800
68	125	1.36	871A0724	5275
68	131	2.25	872A0724	7437
68	137	3.86	873A0724	11944
64	117	0.80	870A0824	2800
64	121	1.28	871A0824	5275
64	128	2.68	872A0824	7437
55	136	1.18	871A0924	5268
55	140	2.50	872A0924	7437
55	149	3.97	873A0924	11944
48	153	1.09	871A1024	5268
48	158	2.29	872A1024	7435
48	167	3.65	873A1024	11936
41	201	0.95	871A1124	5254
41	199	1.71	872A1124	7433
41	216	2.88	873A1124	11820
38	193	0.91	871A1224	5260
38	197	1.91	872A1224	7433
38	208	3.05	873A1224	11836
34	206	0.87	871A1324	5260
34	222	1.74	872A1324	7433
34	235	2.77	873A1324	11832
30	284	1.34	872A1424	7434
30	302	2.30	873A1424	11795
30	290	3.00	874A1424	29166
27	307	1.27	872A1524	7428
27	322	2.20	873A1524	11764
27	327	2.69	874A1524	29166
25	297	1.40	872A1624	7428
25	317	2.20	873A1624	11811
25	338	2.79	874A1624	29168
22	333	1.28	872A1724	7422
22	364	1.98	873A1724	11764
22	386	2.51	874A1724	29152
19	434	0.88	872A1824	7420
19	463	1.64	873A1824	11644
19	448	2.07	874A1824	29152
17	506	1.20	873A1924	11644
17	490	1.91	874A1924	29136
15	470	1.02	872A2024	7410
15	503	1.52	873A2024	11644
15	547	1.88	874A2024	29133
15	546	3.88	875A2024	41877
14	504	0.95	872A2124	7400
14	534	1.43	873A2124	11644
14	612	1.71	874A2124	29133
14	621	2.16	874A4024	29097
14	612	3.53	875A2124	41884
12	680	0.93	873A2224	11500
12	665	1.46	874A2224	29133
12	718	1.87	874A4124	29029
12	756	3.77	875A2324	41868
11	687	1.11	873A4224	11500
11	739	1.31	874A2324	29100
11	749	1.47	874A4224	29087
10	773	0.99	873A4324	11500
10	833	1.34	874A2424	29084
10	851	2.71	875A2424	41852
9	914	1.25	874A2524	29084
9	932	2.52	875A2524	41855
7	1234	0.97	874A2624	29000
7	1230	2.01	875A2624	41810
6	1366	0.89	874A2724	28900
6	1409	1.79	875A2724	41833
6	1485	3.76	876A2724	53800

1.5 KW MOTOR

Nominal Output Rev/Min	Output Torque Nm	Service Factor	Unit Selection	Overhung Load N
162	72	1.12	870A0128	2820
162	73	1.85	871A0128	5285
162	72	2.87	872A0128	7440
120	96	0.91	870A0228	2810
120	98	1.51	871A0228	5275
120	100	2.36	872A0228	7440
105	109	0.83	870A0328	2800
105	111	1.38	871A0328	5276
105	110	2.23	872A0328	7440
105	116	3.82	873A0328	11945
93	125	1.27	871A0428	5270
93	125	2.07	872A0428	7437
93	130	3.56	873A0428	11923
86	123	1.16	871A0528	5270
86	126	2.52	872A0528	7440
86	131	3.94	873A0528	11942
74	158	1.06	871A0628	5270
74	157	1.79	872A0628	7440
74	164	3.08	873A0628	11904
67	170	1.01	871A0728	5270
67	177	1.66	872A0728	7436
67	186	2.85	873A0728	11904
63	164	0.95	871A0828	5270
63	174	1.98	872A0828	7436
63	182	3.18	873A0828	11904
56	185	0.87	871A0928	5260
56	190	1.85	872A0928	7436
56	202	2.93	873A0928	11904
49	207	0.80	871A1028	5260
49	214	1.69	872A1028	7432
49	226	2.70	873A1028	11889
43	270	1.26	872A1128	7428
43	292	2.13	873A1128	11762
43	278	2.85	874A1128	28940
39	268	1.41	872A1228	7428
39	282	2.25	873A1228	11789
34	301	1.29	872A1328	7428
34	318	2.04	873A1328	11783
30	384	0.99	872A1428	7430
30	409	1.70	873A1428	11712
30	393	2.21	874A1428	29142
28	415	0.94	872A1528	7420
28	436	1.63	873A1528	11668
28	443	1.98	874A1528	29142
25	402	1.03	872A1628	7420
25	429	1.63	873A1628	11734
25	458	2.06	874A1628	29144
22	451	0.95	872A1728	7410
22	493	1.46	873A1728	11668
22	523	1.85	874A1728	29117
20	627	1.21	873A1828	11500
20	606	1.53	874A1828	29117
18	685	0.89	873A1928	11500
18	663	1.41	874A1928	29089
18	677	3.78	875A1928	41845
16	682	1.12	873A2028	11500
16	740	1.39	874A2028	29084
16	739	2.87	875A2028	41861
14	724	1.06	873A2128	11500
14	829	1.27	874A2128	29084
14	841	1.59	874A4028	29056
14	829	2.60	875A2128	41872
13	901	1.08	874A2228	29084
13	897	3.08	875A2228	41872
12	1000	0.97	874A2328	29027
12	972	1.38	874A4128	28960
12	1024	2.78	875A2328	41844
11	1014	1.08	874A4228	29006
10	1128	0.99	874A2428	29000
10	1152	2.00	875A2428	41817
9	1238	0.92	874A2528	29000
9	1262	1.86	875A2528	41822
8	1445	0.93	874A4528	28900
6.5	1666	1.48	875A2628	41744
6.5	1803	3.09	876A2628	53736
5.6	1908	1.33	875A2728	41784
5.6	2011	2.77	876A2728	53727

2.2 KW MOTOR

Nominal Output Rev/Min	Output Torque Nm	Service Factor	Unit Selection	Overhung Load N
165	107	1.27	871A0136	5282
165	106	1.96	872A0136	7440
165	109	3.40	873A0136	11928
121	144	1.03	871A0236	5268
121	147	1.62	872A0236	7440
121	152	2.80	873A0236	11905
110	163	0.94	871A0336	5270
110	161	1.53	872A0336	7440
110	170	2.61	873A0336	11905
97	183	0.87	871A0436	5260
97	182	1.42	872A0436	7435
97	191	2.44	873A0436	11866
88	185	1.72	872A0536	7440
88	191	2.69	873A0536	11900
88	205	3.49	874A0536	27500
76	230	1.22	872A0636	7440
76	240	2.11	873A0636	11833
76	237	3.70	874A0636	28200
67	259	1.13	872A0736	7433
67	272	1.95	873A0736	11833
67	269	3.42	874A0736	29200
62	254	1.35	872A0836	7433
62	266	2.18	873A0836	11833
62	282	2.77	874A0836	29200
57	278	1.26	872A0936	7433
57	296	2.01	873A0936	11833
57	315	2.54	874A0936	29200
50	312	1.16	872A1036	7426
50	331	1.84	873A1036	11808
50	347	2.37	874A1036	29200
43	395	0.86	872A1136	7420
43	427	1.46	873A1136	11660
43	406	1.95	874A1136	28748
40	391	0.96	872A1236	7420
40	413	1.54	873A1236	11708
40	448	1.94	874A1236	29200
40	453	3.97	875A1236	41900
35	440	0.88	872A1336	7420
35	465	1.40	873A1336	11697
35	507	1.76	874A1336	29200
35	506	3.64	875A1336	41900
30	598	1.16	873A1436	11566
30	575	1.51	874A1436	29100
30	576	3.77	875A1436	41063
28	637	1.11	873A1536	11500
28	648	1.36	874A1536	29100
28	646	3.48	875A1536	41638
25	627	1.11	873A1636	11600
25	670	1.41	874A1636	29104
25	690	2.84	875A1636	41900
22	720	1.00	873A1736	11500
22	764	1.27	874A1736	29056
22	797	2.52	875A1736	41900
20	886	1.05	874A1836	29056
20	901	2.76	875A1836	41828
18	970	0.96	874A1936	29008

Series C Gearboxes : Motorised selection

Nominal Output Rev/Min	Output Torque Nm	Service Factor	Unit Selection	Overhung Load N
18	989	2.59	875A1936	41805
16	1082	0.95	874A2036	29000
16	1081	1.96	875A2036	41833
15	1211	1.78	875A2136	41852
14	1211	0.87	874A2136	29000
14	1229	1.09	874A4036	28983
14	1311	2.10	875A2236	41852
14	1280	3.79	876A2136	53722
13	1376	3.23	876A2236	53731
12	1421	0.94	874A4136	28838
12	1497	1.90	875A2336	41804
12	1539	2.92	876A2336	53714
10	1684	1.37	875A2436	41756
10	1772	2.98	876A2436	53696
9	1845	1.27	875A2536	41765
9	1950	2.78	876A2536	53679
7	2435	1.01	875A2636	41630
7	2635	2.12	876A2636	53625
6	2789	0.91	875A2736	41700
6	2939	1.90	876A2736	53600
4	3876	1.44	876A2645	53443
4	4064	2.17	877A2645	87347

3.0 KW MOTOR

Nominal Output Rev/Min	Output Torque Nm	Service Factor	Unit Selection	Overhung Load N
171	147	0.93	871A0138	5280
171	145	1.44	872A0138	7440
171	149	2.50	873A0138	11894
123	200	1.19	872A0238	7440
123	208	2.05	873A0238	11858
123	201	3.64	874A0238	24654
116	220	1.12	872A0338	7440
116	232	1.92	873A0338	11858
116	227	3.37	874A0338	25318
100	249	1.04	872A0438	7432
100	260	1.79	873A0438	11802
100	249	3.19	874A0438	25990
90	253	1.26	872A0538	7440
90	261	1.98	873A0538	11851
90	279	2.56	874A0538	27218
80	314	0.90	872A0638	7440
80	328	1.55	873A0638	11752
80	323	2.72	874A0638	27800
70	354	0.83	872A0738	7430
70	370	1.43	873A0738	11752
70	367	2.51	874A0738	28732
62	347	0.99	872A0838	7430
62	362	1.60	873A0838	11752
62	385	2.03	874A0838	28898
58	379	0.93	872A0938	7430
58	403	1.47	873A0938	11752
58	430	1.86	874A0938	28943
58	434	3.80	875A0938	38856
50	426	0.85	872A1038	7420
50	451	1.35	873A1038	11715
50	473	1.74	874A1038	29018
50	480	3.54	875A1038	39518
45	583	1.07	873A1138	11544
45	554	1.43	874A1138	28530
45	577	3.37	875A1138	40736
40	563	1.13	873A1238	11615
40	611	1.42	874A1238	29151
40	618	2.91	875A1238	41500
35	634	1.03	873A1338	11600
35	691	1.29	874A1338	29151
35	690	2.67	875A1338	41563
33	785	2.76	875A1438	41657
31	815	0.85	873A1438	11400
31	785	1.11	874A1438	29051
29	883	1.00	874A1538	29051
29	881	2.55	875A1538	41512
26	913	1.04	874A1638	29057
26	942	2.08	875A1638	41884
22	1042	0.93	874A1738	28986

Nominal Output Rev/Min	Output Torque Nm	Service Factor	Unit Selection	Overhung Load N
22	1087	1.85	875A1738	41869
20	1229	2.02	875A1838	41794
20	1250	3.41	876A1838	53723
19	1349	1.89	875A1938	41758
19	1380	3.12	876A1938	53704
16	1474	1.43	875A2038	41801
16	1578	2.98	876A2038	53684
14	1652	1.30	875A2138	41828
14	1745	2.78	876A2138	53665
13	1788	1.54	875A2238	41828
13	1877	2.37	876A2238	53681
12	2042	1.21	875A2338	41757
12	2098	2.14	876A2338	53651
12	2064	3.87	877A2338	87400
10	2296	1.00	875A2438	41686
10	2417	2.19	876A2438	53621
10	2462	3.15	877A2438	87381
9	2517	1.00	875A2538	41700
9	2660	2.04	876A2538	53592
9	2818	2.82	877A2538	87372
6.4	3593	1.55	876A2638	53497
6.4	3757	2.23	877A2638	87369
5.7	4007	1.39	876A2738	53454
5.7	4021	2.11	877A2738	87369

4.0 KW MOTOR

Nominal Output Rev/Min	Output Torque Nm	Service Factor	Unit Selection	Overhung Load N
173	193	3.19	874A0146	22778
173	197	1.89	873A0146	11851
173	192	1.09	872A0146	7440
130	267	2.75	874A0246	24347
130	275	1.55	873A0246	11801
130	265	0.90	872A0246	7440
116	301	2.55	874A0346	24965
116	308	1.45	873A0346	11801
116	291	0.85	872A0346	7440
100	329	2.41	874A0446	25604
100	344	1.35	873A0446	11721
90	369	3.76	875A0546	34793
90	370	1.93	874A0546	26865
90	346	1.49	873A0546	11790
80	431	3.66	875A0646	35596
80	428	2.05	874A0646	27300
80	435	1.17	873A0646	11651
70	483	3.41	875A0746	36798
70	485	1.90	874A0746	28147
70	491	1.08	873A0746	11651
65	519	3.04	875A0846	37796
65	509	1.53	874A0846	28520
65	480	1.20	873A0846	11651
58	574	2.87	875A0946	38426
58	570	1.41	874A0946	28622
58	534	1.11	873A0946	11651
50	636	2.67	875A1046	39040
50	626	1.31	874A1046	28792
50	597	1.02	873A1046	11600
45	765	2.55	875A1146	40031
45	734	1.08	874A1146	28526
45	772	0.81	873A1146	11400
40	819	2.20	875A1246	41000
40	810	1.08	874A1246	29090
40	746	0.85	873A1246	11500
35	913	2.01	875A1346	41143
35	915	0.98	874A1346	29090
33	1071	3.76	876A1446	53733
33	1040	2.09	875A1446	40150
33	1039	0.84	874A1446	28990
29	1189	3.44	876A1546	53716
29	1167	1.93	875A1546	41353
26	1247	1.57	875A1646	41866
22	1440	1.40	875A1746	41832
20	1655	2.57	876A1846	53682
20	1628	1.53	875A1846	41751

Nominal Output Rev/Min	Output Torque Nm	Service Factor	Unit Selection	Overhung Load N
18	1827	2.35	876A1946	53653
18	1787	1.43	875A1946	41701
16	1951	1.09	875A2046	41760
15	2100	3.39	877A2046	87400
15	2089	2.25	876A2046	53624
14	2322	3.12	877A2146	87385
14	2311	2.10	876A2146	53594
14	2188	0.99	875A2146	41800
13	2551	3.39	877A2246	87400
13	2485	1.79	876A2246	53618
12	2733	2.92	877A2346	87400
12	2779	1.62	876A2346	53573
12	2368	1.17	875A2246	41800
10	3260	2.38	877A2446	87359
10	3200	1.65	876A2446	53528
10	2704	1.05	875A2346	41700
9	3732	2.13	877A2546	87338
9	3521	1.54	876A2546	53482
6.5	4974	1.68	877A2646	87332
6.5	4758	1.17	876A2646	53338
5.7	5324	1.59	877A2746	87332
5.7	5306	1.05	876A2746	53272

Series C Gearboxes : Motorised selection

Double reduction, see page
Triple reduction, see page
Higher ratios are available on request.

5.5 KW MOTOR

Nominal Output Rev/Min	Output Torque Nm	Service Factor	Unit Selection	Overhung Load N
175	270	1.38	873A0154	11786
175	265	2.33	874A0154	22426
130	377	1.13	873A0254	11715
130	366	2.00	874A0254	23887
130	371	3.56	875A0254	31175
119	413	3.34	875A0354	31897
110	422	1.06	873A0354	11715
110	412	1.86	874A0354	24437
100	472	0.99	873A0454	11600
100	452	1.76	874A0454	25025
100	457	3.12	875A0454	32868
90	474	1.09	873A0554	11700
90	507	1.41	874A0554	26337
90	506	2.74	875A0554	34371
77	596	0.85	873A0654	11500
77	587	1.50	874A0654	26550
77	591	2.67	875A0654	35010
72	665	1.38	874A0754	27269
72	662	2.49	875A0754	36130
65	658	0.88	873A0854	11500
65	698	1.12	874A0854	27965
65	711	2.22	875A0854	37210
58	732	0.81	873A0954	11500
58	781	1.03	874A0954	28141
58	787	2.09	875A0954	37782
54	858	0.96	874A1054	28452
54	871	1.95	875A1054	38325
46	1048	1.86	875A1154	38975
41	1122	1.60	875A1254	40250
37	1251	1.47	875A1354	40512
33	1425	1.52	875A1454	39389
33	1468	2.74	876A1454	53698
29	1599	1.41	875A1554	41116
29	1629	2.51	876A1554	53673
27	1709	1.15	875A1654	41837
23	1973	1.02	875A1754	41775
21	2231	1.12	875A1854	41686
21	2268	1.88	876A1854	53622
21	2272	3.34	877A1854	85716
19	2448	1.05	875A1954	41615
19	2504	1.72	876A1954	53577
19	2606	2.94	877A1954	86407
16	2863	1.64	876A2054	53533
16	2878	2.47	877A2054	87400
14	3167	1.53	876A2154	53488
14	3182	2.28	877A2154	87374
13	3405	1.30	876A2254	53525
13	3496	2.47	877A2254	87400
12	3808	1.18	876A2354	53456
12	3745	2.13	877A2354	87400
10	4385	1.21	876A2454	53387
10	4467	1.74	877A2454	87325
9	4825	1.12	876A2554	53318
9	5114	1.56	877A2554	87287
6.5	6519	0.86	876A2654	53100
6.5	6816	1.23	877A2654	87275
6	7295	1.16	877A2754	87275

7.5 KW MOTOR

Nominal Output Rev/Min	Output Torque Nm	Service Factor	Unit Selection	Overhung Load N
180	367	1.01	873A0156	11700
180	360	1.71	874A0156	21957
180	355	3.20	875A0156	28647
130	513	0.83	873A0256	11600
130	497	1.47	874A0256	23273
130	504	2.62	875A0256	30675
118	561	1.37	874A0356	23732
118	561	2.46	875A0356	31350
107	614	1.30	874A0456	24252
107	622	2.30	875A0456	32243
92	689	1.04	874A0556	25632
92	688	2.02	875A0556	33809
82	797	1.10	874A0656	25550
82	803	1.97	875A0656	34229
72	904	1.02	874A0756	26100
72	899	1.83	875A0756	35239
66	949	0.82	874A0856	27200
66	966	1.63	875A0856	36429
59	1070	1.54	875A0956	36922
53	1184	1.44	875A1056	37370
46	1424	1.37	875A1156	37565
41	1525	1.18	875A1256	39250
37	1701	1.08	875A1356	39671
33	1937	1.12	875A1456	38375
33	1995	2.02	876A1456	53652
33	1975	3.61	877A1456	82939
29	2173	1.04	875A1556	40800
29	2214	1.85	876A1556	53616
29	2188	3.32	877A1556	83701
26	2322	0.84	875A1656	41800
21	3032	0.82	875A1856	41600
21	3082	1.38	876A1856	53541
21	3087	2.46	877A1856	84696
19	3412	1.26	876A1956	53476
19	3541	2.17	877A1956	85806
16	3891	1.21	876A2056	53412
16	3911	1.82	877A2056	87400
14	4304	1.10	876A2156	53347
14	4324	1.67	877A2156	87358
13	4628	0.96	876A2256	53400
13	4751	1.82	877A2256	87400
12	5174	0.87	876A2356	53300
12	5089	1.57	877A2356	87400
10	5959	0.89	876A2456	53200
10	6070	1.28	877A2456	87279
9	6557	0.83	876A2556	53100
9	6949	1.15	877A2556	87219
6.5	9263	0.90	877A2656	87200
6	9913	0.85	877A2756	87200

11.0 KW MOTOR

Nominal Output Rev/Min	Output Torque Nm	Service Factor	Unit Selection	Overhung Load N
180	526	1.17	874A0166	21137
180	520	2.19	875A0166	28018
180	539	3.93	876A0166	44500
132	727	1.01	874A0266	22200
132	737	1.79	875A0266	29800
132	741	3.26	876A0266	47600
118	820	0.94	874A0366	22500
118	820	1.68	875A0366	30393
118	831	3.05	876A0366	48700
107	898	0.89	874A0466	22900
107	909	1.57	875A0466	31150
107	928	2.85	876A0466	50100
94	1005	1.38	875A0566	32825
94	1075	2.40	876A0566	53100
83	1174	1.35	875A0666	32862
83	1194	2.45	876A0666	53300
74	1315	1.25	875A0766	33681
74	1326	2.29	876A0766	53800
66	1413	1.12	875A0866	35062
66	1473	1.98	876A0866	53800
66	1520	3.55	877A0866	73000
59	1564	1.05	875A0966	35418
59	1652	1.85	876A0966	53800
59	1651	3.35	877A0966	74000
53	1731	0.98	875A1066	35700
53	1841	1.73	876A1066	53800
53	1869	3.05	877A1066	75400
46	2082	0.94	875A1166	35100
46	2078	1.73	876A1166	53800
46	2126	3.01	877A1166	75100
40	2229	0.81	875A1266	37500
40	2355	1.48	876A1266	53800
40	2424	2.50	877A1266	79400
35	2634	1.38	876A1366	53700
35	2601	2.36	877A1366	81000
33	2916	1.38	876A1466	53572
33	2887	2.47	877A1466	80522
29	3236	1.26	876A1566	53515
29	3198	2.27	877A1566	81258
25	3601	1.13	876A1666	53600
25	3753	1.76	877A1666	87400
22	4091	1.04	876A1766	53500
22	4231	1.60	877A1766	87400
21	4505	0.95	876A1866	53400
21	4512	1.68	877A1866	82911
19	4973	0.86	876A1966	53300
19	5176	1.48	877A1966	84754
16	5687	0.83	876A2066	53200
16	5716	1.25	877A2066	87400
14	6320	1.15	877A2166	87331
13	6945	1.25	877A2266	87400
12	7438	1.07	877A2366	87400
10	8873	0.87	877A2466	87200

Series C Gearboxes : Motorised selection

15.0 KW MOTOR

Nominal Output Rev/Min	Output Torque Nm	Service Factor	Unit Selection	Overhung Load N
183	716	0.86	874A0168	20200
183	707	1.61	875A0168	27300
183	733	2.89	876A0168	43852
132	1001	1.32	875A0268	28800
132	1007	2.40	876A0268	46717
118	1115	1.24	875A0368	29300
118	1130	2.25	876A0368	47715
118	1116	3.99	877A0368	60823
106	1235	1.16	875A0468	29900
106	1261	2.10	876A0468	49007
106	1265	3.70	877A0468	62817
91	1366	1.02	875A0568	31700
91	1460	1.77	876A0568	52131
91	1482	3.19	877A0568	66523
82	1595	0.99	875A0668	31300
82	1622	1.80	876A0668	51889
82	1640	3.16	877A0668	67047
75	1787	0.92	875A0768	31900
75	1803	1.69	876A0768	52636
75	1766	3.02	877A0768	68664
66	1920	0.82	875A0868	33500
66	2002	1.46	876A0868	53727
66	2065	2.61	877A0868	71917
57	2245	1.36	876A0968	53727
57	2244	2.47	877A0968	72823
51	2501	1.27	876A1068	53727
51	2540	2.25	877A1068	74061
46	2824	1.27	876A1168	53586
46	2890	2.21	877A1168	73069
39	3200	1.09	876A1268	53640
39	3294	1.84	877A1268	77673
35	3579	1.02	876A1368	53540
35	3535	1.74	877A1368	79147
33	3963	1.02	876A1468	53480
33	3923	1.82	877A1468	77759
30	4398	0.93	876A1568	53400
30	4347	1.67	877A1568	78467
25	4894	0.83	876A1668	53400
25	5100	1.30	877A1668	85327
22	5750	1.18	877A1768	85945
21	6132	1.24	877A1866	80870
18	7034	1.09	877A1968	83552
16	7768	0.92	877A2068	87400
14	8589	0.84	877A2168	87300

18.5 KW MOTOR

Nominal Output Rev/Min	Output Torque Nm	Service Factor	Unit Selection	Overhung Load N
183	895	2.37	876A0176	43286
133	1230	1.97	876A0276	45945
133	1251	3.44	877A0276	59054
120	1379	1.84	876A0376	46853
120	1362	3.27	877A0376	60144
106	1540	1.72	876A0476	48051
106	1544	3.03	877A0476	62045
88	1783	1.45	876A0576	51284
88	1809	2.61	877A0576	65844
82	1980	1.47	876A0676	50655
82	2002	2.59	877A0676	66038
74	2201	1.38	876A0776	51618
74	2156	2.47	877A0776	67583
64	2444	1.19	876A0876	53663
64	2522	2.14	877A0876	70970
57	2741	1.11	876A0976	53663
57	2739	2.02	877A0976	71794
51	3054	1.04	876A1076	53663
51	3101	1.84	877A1076	72890
46	3447	1.04	876A1176	53400
46	3528	1.81	877A1176	71292
39	3907	0.89	876A1276	53500
39	4021	1.51	877A1276	76163
35	4316	1.42	877A1376	77526
35	4369	0.83	876A1376	53400
33	4838	0.83	876A1476	53400
33	4790	1.49	877A1476	75342
30	5306	1.37	877A1576	76025
25	6226	1.06	877A1676	83513
22	7019	0.96	877A1776	84672
21	7486	1.10	877A1876	79085
18	8586	0.89	877A1976	82500

22.0 KW MOTOR

Nominal Output Rev/Min	Output Torque Nm	Service Factor	Unit Selection	Overhung Load N
184	1064	1.99	876A0178	42720
184	1066	3.50	877A0178	54676
133	1462	1.65	876A0278	45173
133	1488	2.89	877A0278	58426
119	1640	1.55	876A0378	45992
119	1620	2.75	877A0378	59464
106	1831	1.45	876A0478	47096
106	1836	2.55	877A0478	61273
88	2120	1.22	876A0578	50436
88	2151	2.20	877A0578	65164
82	2355	1.24	876A0678	49421
82	2381	2.18	877A0678	65029
74	2617	1.16	876A0778	50600
74	2564	2.08	877A0778	66502
64	2906	1.00	876A0878	53600
64	2999	1.80	877A0878	70023
58	3250	0.94	876A0978	53600
58	3258	1.70	877A0978	70764
51	3632	0.88	876A1078	53600
51	3687	1.55	877A1078	71719
46	4195	1.53	877A1178	69515
39	4782	1.27	877A1278	74652
36	5133	1.20	877A1378	75905
34	5696	1.25	877A1478	72925
30	6310	1.15	877A1578	73582
25	7405	0.89	877A1678	81700
22	8347	0.81	877A1778	83400
21	8903	0.85	877A1878	77300

30.0 KW MOTOR

Nominal Output Rev/Min	Output Torque Nm	Service Factor	Unit Selection	Overhung Load N
184	1452	1.46	876A0188	41426
184	1454	2.56	877A0188	53641
134	1994	1.21	876A0288	43408
134	2029	2.12	877A0288	56991
120	2237	1.14	876A0388	44023
120	2209	2.01	877A0388	57911
106	2497	1.06	876A0488	44911
106	2504	1.87	877A0488	59508
88	2891	0.89	876A0588	48500
88	2934	1.61	877A0588	63611
83	3212	0.91	876A0688	46600
83	3247	1.60	877A0688	62723
76	3497	1.52	877A0788	64032
63	4089	1.32	877A0888	67858
58	4442	1.25	877A0988	68411
51	5028	1.14	877A1088	69042
46	5721	1.12	877A1188	65453
39	6520	0.93	877A1288	71200
36	6999	0.88	877A1388	72200
34	7767	0.92	877A1488	67400
30	8605	0.84	877A1588	68000

37.0 KW MOTOR

Nominal Output Rev/Min	Output Torque Nm	Service Factor	Unit Selection	Overhung Load N
185	1784	1.19	876A0194	40294
185	1787	2.09	877A0194	52735
134	2451	0.99	876A0294	41864
134	2494	1.72	877A0294	55735
120	2749	0.92	876A0394	42300
120	2715	1.64	877A0394	56552
106	3069	0.86	876A0494	43000
106	3078	1.52	877A0494	57964
89	3606	1.31	877A0594	62252
83	3991	1.30	877A0694	60705
76	4298	1.24	877A0794	61870
63	5026	1.07	877A0894	65964
58	5460	1.01	877A0994	66352
51	6181	0.92	877A1094	66700
46	7032	0.91	877A1194	61900

45.0 KW MOTOR

Nominal Output Rev/Min	Output Torque Nm	Service Factor	Unit Selection	Overhung Load N
185	2170	0.98	876A0195	39000
185	2173	1.72	877A0195	51700
134	2982	0.81	876A0295	40100
134	3033	1.42	877A0295	54300
122	3302	1.35	877A0395	55000
108	3743	1.25	877A0495	56200
89	4386	1.08	877A0595	60700
83	4854	1.07	877A0695	58400
76	5228	1.02	877A0795	59400
63	6113	0.88	877A0895	63800
58	6641	0.83	877A0995	64000

Series C Gearboxes : Dimensions motorised

Foot Mounted Motorised - with output shaft

Double/Triple Reduction

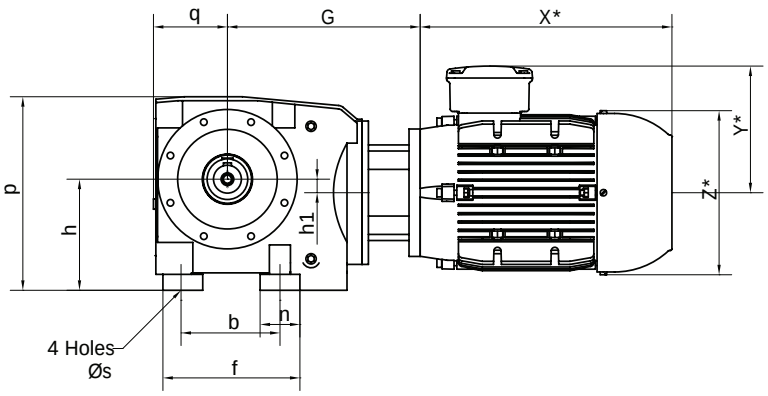

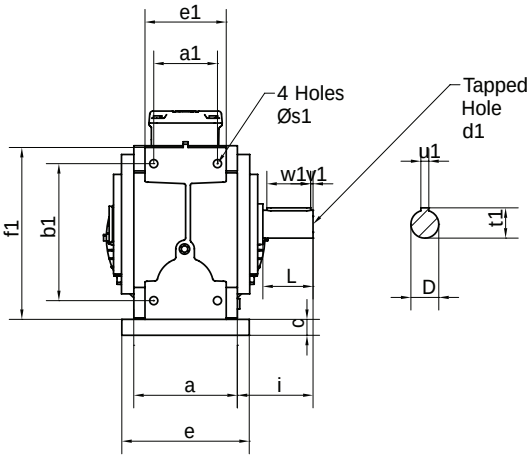

Unit Size	a	b	c	e	f	h	h1	i	n	p	q	s	a1	b1	e1	f1	s1	Shaft Dimensions						
																		D	L	t1	u1	v1	w1	d1
870	90	63	9	110	88	80	5.3	55	25	148	63	9	54	40	70	139	M8x1.25 x 15 deep	Ø20 k6	35	22.5	6	3	31	M6 x 1.0 x 16 deep
871	100	80	14	124	115	100	15	65	35	175	78	11	56	65	80	158	M10x1.5 x 20 deep	Ø25 k6	46	28.0	8	3	42	M10 x 1.5 x 22 deep
872	110	100	16	136	140	112	13	79	40	200	84	11	68	77	86	177	M10x1.5 x 18 deep	Ø30 k6	60	33.0	8	3	53	M10 x 1.5 x 22 deep
873	130	130	20	160	172	140	17	95	50	243	110	14	80	96	102	218	M12x1.75 x 20 deep	Ø35 k6	63	38.0	10	3	55	M12 x 1.75 x 25 deep
								130										Ø45 k6 *	98	48.5	14	5	80	M16 x 2.0 x 36 deep

* Heavy Duty output shaft for 873 unit available as option (unit will have Ø35mm shaft unless requested)

G Dimension/weight - excluding motor

Unit Size		Motor Frame Size							Triple +
		63	71	80	90	100	112	132	
870	G	134	138	151	161	169	169	-	56
	kg	13	12	13	14	17	17	-	1.5
871	G	139	143	156	166	174	174	-	56
	kg	18	17	18	18	21	21	-	1.5
872	G	152	156	169	179	187	187	-	56
	kg	12	12	13	13	15	15	-	2.5
873	G	161	167	185	195	222	222	222	88
	kg	20	20	21	22	25	25	27	2.5

All weights are approximate and exclude lubricant and packing

* For Motor weight and dimensions X,Y and Z - please refer to motor tables on page 314

Recommended Fixing Bolts

Unit Size		Fasteners & Tightening Torque
870	Size	4 off M8 x 20mm long
	Nm	Tighten to - 25Nm
871	Size	4 off M10 x 30mm long
	Nm	Tighten to - 50Nm
872	Size	4 off M10 x 30mm long
	Nm	Tighten to - 50Nm
873	Size	4 off M12 x 40mm long
	Nm	Tighten to 85Nm

Handing

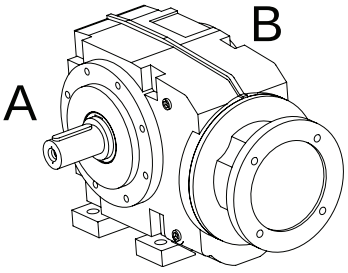

Series C Gearboxes : Non-motorised selection

Foot Mounted Motorised - with output shaft

Double/Triple Reduction

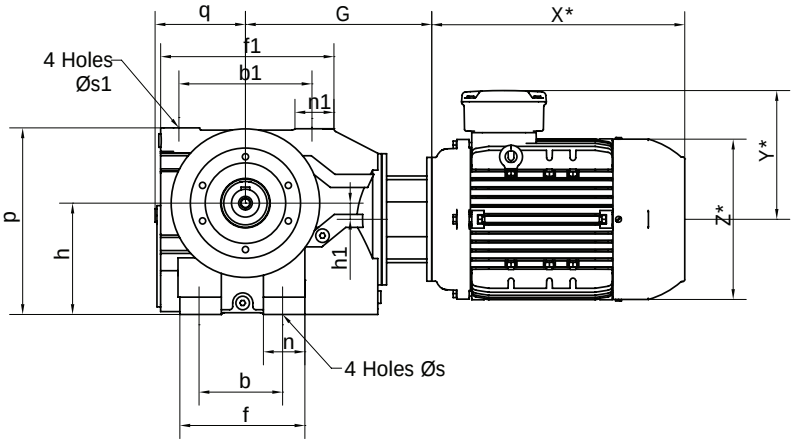

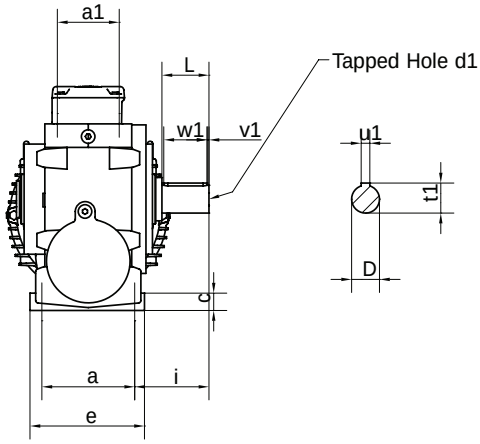

Unit Size	a	b	c	e	f	h	h1	i	n	p	q	s	a1	b1	e1	f1	s1	Shaft Dimensions						
																		D	L	t1	u1	v1	w1	d1
874	150	135	28	185	202	180	26	120	67	302	143	18	100	215	280	63	M20x2.5 x 34 deep	Ø45 k6	76	48.5	14	3	70	M16 x 2.0 x 36 deep
875	200	180	35	250	260	225	28	155	80	375	168	22	120	250	326	71	M20x2.5 x 34 deep	Ø60 m6	120	64.0	18	3	110	M12 x 1.75 x 28 deep
876	250	235	40	305	320	280	40	170	85	457	195	26	135	290	380	85	M24x3.0 x 45 deep	Ø70 m6	135	74.5	20	3	125	M16 x 2.0 x 36 deep
877	300	310	45	360	420	335	65	216	110	565	235	26	150	345	460	107	M24x3.0 x 45 deep	Ø90 m6	170	95.0	25	3	160	M16 x 2.0 x 36 deep

G Dimensions/weight - excluding motor

Unit Size		Motor Frame Size										
		63	71	80	90	100	112	132	160	180	200	225
874 Double	G	-	-	257	267	279	279	301	309	-	-	-
	kg	-	-	78	79	81	81	83	88	-	-	-
874 Triple	G	308	314	332	342	369	369	369	-	-	-	-
	kg	88	88	88	88	90	90	90	-	-	-	-
875	G	-	-	337	337	343	343	343	373	-	-	-
	kg	-	-	130	130	132	132	135	152	-	-	-
876	G	-	-	358	358	364	364	364	399	399	399	426
	kg	-	-	212	212	214	214	217	222	235	239	243
877	G	-	-	-	-	402	402	402	437	437	437	464
	kg	-	-	-	-	343	343	346	351	364	368	372

All weights are approximate and exclude lubricant and packing

* For Motor weight and dimensions X,Y and Z - please refer to motor tables on page 314

Recommended Fixing Bolts

Unit Size		Fasteners & Tightening Torque
874	Size	4 off M16 x 50mm long
	Nm	Tighten to 200Nm
875	Size	4 off M20 x 65mm long
	Nm	Tighten to 350Nm
876	Size	4 off M24 x 75mm long
	Nm	Tighten to 610Nm
877	Size	4 off M24 x 80mm long
	Nm	Tighten to 610Nm

Handing

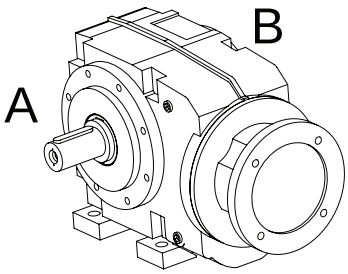

Series C Gearboxes : Dimensions motorised

Shaft Mounted Motorised - with torque arm

Double/Triple Reduction

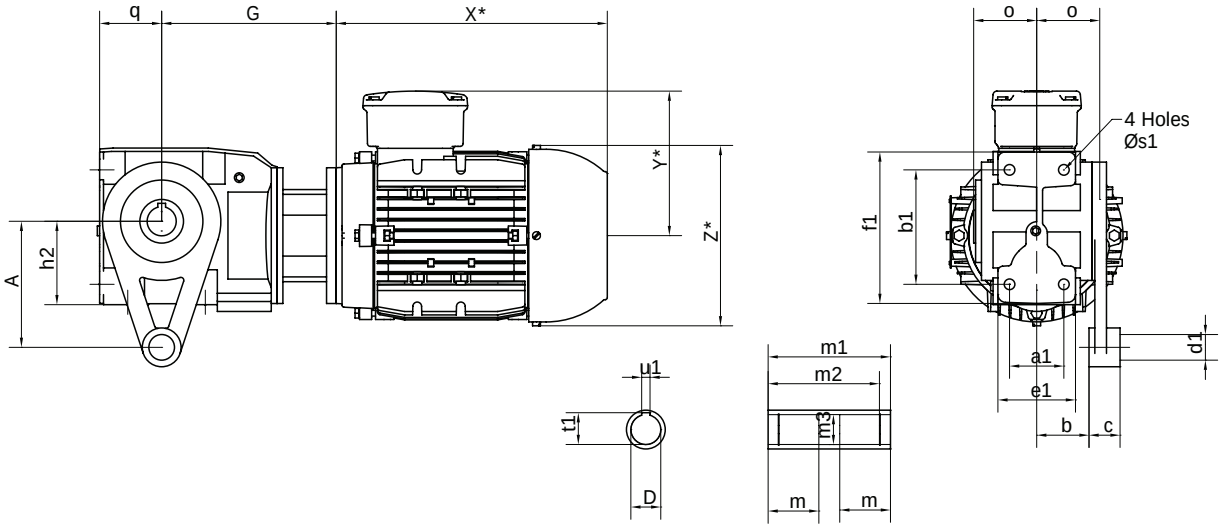

Unit Size	A	b	c	d1	h2	o	q	a1	b1	e1	f1	s1	Shaft Dimensions							
													D	m1	t1	u1	m	m2	m3	Shaft Fixing Bolt
870	110	47	36	10.3	79.5	62	54	54	40	70	139	M8x1.25 x 15 deep	Ø20 H7	124	22.8	6	52	104	20.2	M6 x 1.0 x 40mm long
871	130	52	36	10.3	93.0	65	64	56	65	80	158	M10x1.5 x 20 deep	Ø25 H7 *	130	28.3	8	54	122	30.2	M10 x 1.5 x 50mm long
													Ø30 H7	130	33.3	8	54	122	30.2	M10 x 1.5 x 50mm long
872	160	52	36	10.3	112.0	70	68	68	77	86	177	M10x1.5 x 18 deep	Ø30 H7 *	140	33.3	8	56	127	35.3	M10 x 1.5 x 50mm long
													Ø35 H7	140	38.3	10	56	127	35.3	M12 x 1.75 x 55mm long
873	200	71.5	44	16.5	139.5	90	90	80	96	102	218	M12x1.75 x 20 deep	Ø40 H7 *	180	43.3	12	70	156	45.3	M16 x 2.0 x 70mm long
													Ø45 H7	180	48.3	14	70	156	45.3	M16 x 2.0 x 70mm long

* Alternate Bore Option

G Dimension/weight - excluding motor

Unit Size		Motor Frame Size							Triple +
		63	71	80	90	100	112	132	
870	G	134	138	151	161	169	169		56
	kg	13	12	13	14	17	17		1.5
871	G	139	143	156	166	174	174		56
	kg	18	17	18	18	21	21		1.5
872	G	152	156	169	179	187	187		56
	kg	12	12	13	13	15	15		2.5
873	G	161	167	185	195	222	222	222	88
	kg	20	20	21	22	25	25	27	2.5

All weights are approximate and exclude lubricant and packing

* For Motor weight and dimensions X,Y and Z - please refer to motor tables on page 314

Torque Arms

Unit Size		
870	Part Number	870A9600
	Available Positions	90° increments
871	Part Number	871A9600
	Available Positions	45° increments
872	Part Number	872A9600
	Available Positions	45° increments
873	Part Number	873A9600
	Available Positions	45° increments

Handing

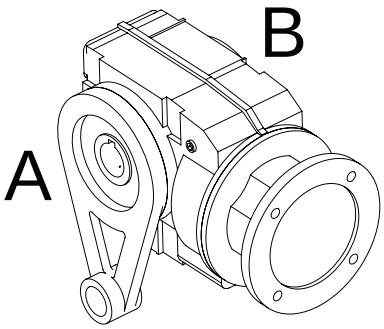

Series C Gearboxes : Dimensions motorised

Shaft Mounted Motorised - with torque arm

Double/Triple Reduction

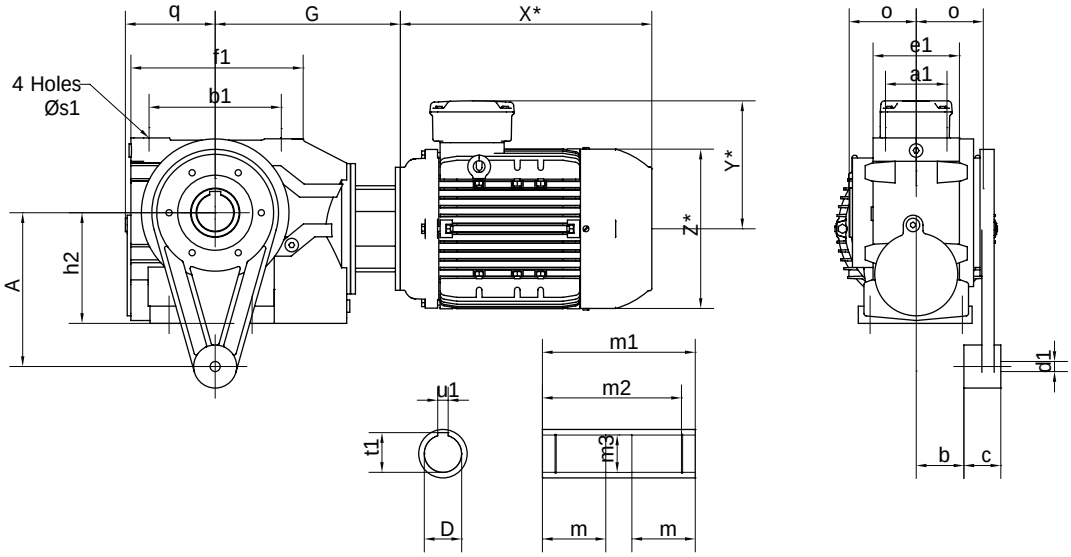

Unit Size	A	b	c	d1	h2	o	q	a1	b1	f1	n1	s1	Shaft Dimensions							
													D	m1	t1	u1	m	m2	m3	Shaft Fixing Bolt
874	250	77.5	60	16.4	180	109	143	100	215	280	63	M20x2.5 x 34 deep	Ø50 H7 *	76	48.5	14	3	70	70	M16 x 2.0 x 36 deep
													Ø60 H7	76	48.5	14	3	70	70	M16 x 2.0 x 36 deep
875	310	85.5	60	16.4	225	125	168	120	250	326	71	M20x2.5 x 34 deep	Ø60 H7 *	120	64.0	18	3	110	110	M12 x 1.75 x 28 deep
													Ø70 H7	120	64.0	18	3	110	110	M12 x 1.75 x 28 deep
876	380	98	80	25	280	150	195	135	290	380	85	M24x3.0 x 45 deep	Ø70 H7 *	135	74.5	20	3	125	125	M16 x 2.0 x 36 deep
													Ø90 H7	135	74.5	20	3	125	125	M16 x 2.0 x 36 deep
877	430	137	80	25	335	175	235	150	345	460	107	M24x3.0 x 45 deep	Ø80 H7 *	170	95.0	25	3	160	160	M16 x 2.0 x 36 deep
													Ø100 H7	170	95.0	25	3	160	160	M16 x 2.0 x 36 deep

* Alternate bore option

G Dimension/weight - excluding motor

Unit Size		Motor Frame Size										
		63	71	80	90	100	112	132	160	180	200	225
874 Double	G			257	267	279	279	301	309			
	kg			78	79	81	81	83	88			
874 Triple	G	308	314	332	342	369	369	369				
	kg	88	88	88	88	90	90	90				
875	G			337	337	343	343	343	373			
	kg			130	130	132	132	135	152			
876	G			358	358	364	364	364	399	399	399	426
	kg			212	212	214	214	217	222	235	239	243
877	G					402	402	402	437	437	437	464
	kg					343	343	346	351	364	368	372

All weights are approximate and exclude lubricant and packing

* For Motor weight and dimensions X,Y and Z - please refer to motor tables on page 314

Torque Arms

Unit Size		
874	Part Number	874A9600
	Available Positions	60° increments
875	PartNumber	875A9600
	Available Positions	45° increments
876	Part Number	876A9600
	Available Positions	60° increments
877	Part Number	877A9600
	Available Positions	36° increments

Handing

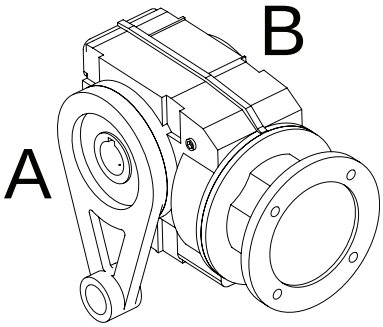

Series C Gearboxes : Dimensions motorised

Shaft Mounted Motorised - with flange

Double/Triple Reduction

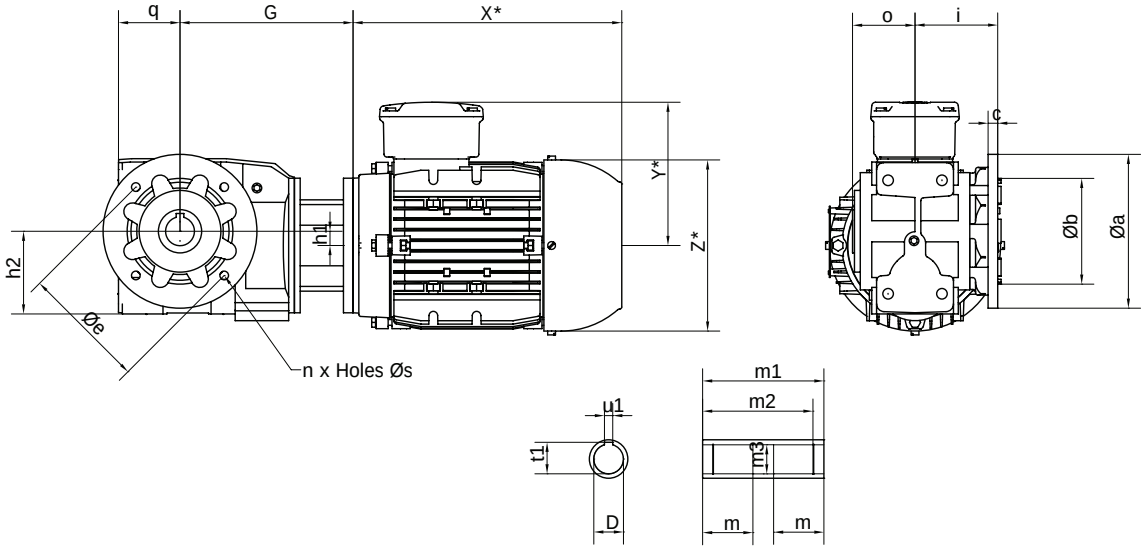

Unit Size	Flange Dimensions						h2	h1	q	o	i	Shaft Dimensions							
	Øa	Øb	c	Øe	n	Øs						D	m1	t1	u1	m	m2	m3	Shaft Fixing Bolt
870	120 **	80 j6	8	100	4	6.6	70.5	5.3	54	62	75	Ø20 H7	124	22.8	6	52	104	20.2	M6 x 1.0 x 40mm long
	160	110 j6	10	130	4	9													
871	160	110 j6	10	130	4	9	86	15	64	65	86	Ø25 H7 *	130	28.3	8	54	122	30.2	M10 x 1.5 x 50mm long
												Ø30 H7	130	33.3	8	54	122	30.2	M10 x 1.5 x 50mm long
872	200	130 j6	12	165	4	11	96	13	68	70	107	Ø30 H7 *	140	33.3	8	56	127	35.3	M10 x 1.5 x 50mm long
												Ø35 H7	140	38.3	10	56	127	35.3	M12 x 1.75 x 55mm long
873	200	130 j6	12	165	4	11	119.5	17	90	90	120	Ø40 H7 *	180	43.3	12	70	156	45.3	M16 x 2.0 x 70mm long
												Ø45 H7	180	48.3	14	70	156	45.3	M16 x 2.0 x 70mm long

* Alternate Bore Option ** Reduced flange option

G Dimension/weight - excluding motor

Unit Size		Motor Frame Size							Triple +
		63	71	80	90	100	112	132	
870	G	134	138	151	161	169	169	-	56
	kg	13	12	13	14	17	17	-	1.5
871	G	139	143	156	166	174	174	-	56
	kg	18	17	18	18	21	21	-	1.5
872	G	152	156	169	179	187	187	-	56
	kg	12	12	13	13	15	15	-	2.5
873	G	161	167	185	195	222	222	222	88
	kg	20	20	21	22	25	25	27	2.5

All weights are approximate and exclude lubricant and packing

* For Motor weight and dimensions X,Y and Z - please refer to motor tables on page 314

Torque Arms

Unit Size		Part No
870**	Output Flange	870A9990
	Extended Shaft	870A9790
870	Output Flange	870A9900
	Extended Shaft	870A9790
871	Output Flange	871A9900
	Extended Shaft	871A9790
872	Output FInage	872A9900
	Extended Shaft	872A9790
873	Output Flange	873A9900
	Output Shaft	873A9790

Handing

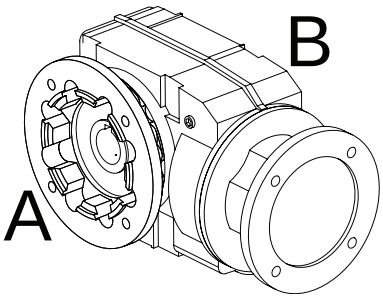

Series C Gearboxes : Dimensions motorised

Shaft Mounted Motorised - with flange

Double/Triple Reduction

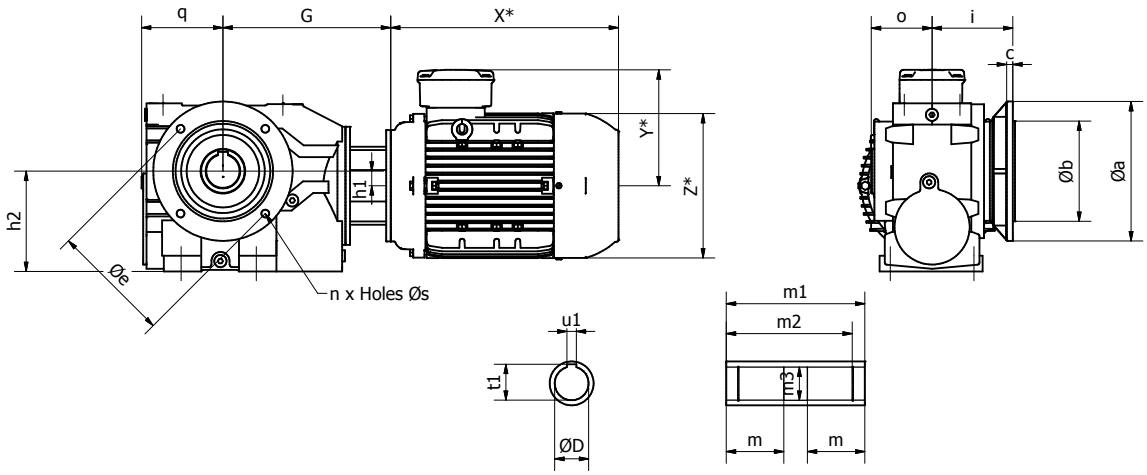

Unit Size	Flange Dimensions						h2	h1	q	o	i	Shaft Dimensions							
	Øa	Øb	c	Øe	n	Øs						D	m1	t1	u1	m	m2	m3	Shaft Fixing Bolt
874	250	180 j6	12	215	4	14	180	26	143	109	145	Ø50 H7 *	76	48.5	14	3	70	70	M16 x 2.0 x 36 deep
												Ø60 H7	76	48.5	14	3	70	70	M16 x 2.0 x 36 deep
875	350	250 h6	18	300	4	18	225	28	168	125	170	Ø60 H7 *	120	64.0	18	3	110	110	M12 x 1.75 x 28 deep
												Ø70 H7	120	64.0	18	3	110	110	M12 x 1.75 x 28 deep
876	450	350 h6	20	400	8	18	280	40	195	150	200	Ø70 H7 *	135	74.5	20	3	125	125	M16 x 2.0 x 36 deep
												Ø90 H7	135	74.5	20	3	125	125	M16 x 2.0 x 36 deep
877	450	350 h6	22	400	8	18	335	65	235	175	232	Ø80 H7 *	170	95.0	25	3	160	160	M16 x 2.0 x 36 deep
												Ø100 H7	170	95.0	25	3	160	160	M16 x 2.0 x 36 deep

G Dimension/weight - excluding motor

Unit Size		Motor Frame Size										
		63	71	80	90	100	112	132	160	180	200	225
874 Double	G	-	-	257	267	279	279	301	309	-	-	-
	kg	-	-	78	79	81	81	83	88	-	-	-
874 Triple	G	308	314	332	342	369	369	369	-	-	-	-
	kg	88	88	88	88	90	90	90	-	-	-	-
875	G	-	-	337	337	343	343	343	373	-	-	-
	kg	-	-	130	130	132	132	135	152	-	-	-
876	G	-	-	358	358	364	364	364	399	399	399	426
	kg	-	-	212	212	214	214	217	222	235	239	243
877	G	-	-	-	-	402	402	402	437	437	437	464
	kg	-	-	-	-	343	343	346	351	364	368	372

All weights are approximate and exclude lubricant and packing

* For Motor weight and dimensions X,Y and Z - please refer to motor tables on page 314

Flange and Shaft

Unit Size		Part No
874	Output Flange	874A9900
	Extended Shaft	874A9790
875	Output Flange	875A9900
	Extended Shaft	875A9790
876	Output Flange	876A9900
	Extended Shaft	876A9790
877	OUtput Flange	877A9900
	Extended Shaft	877A9790

Handing

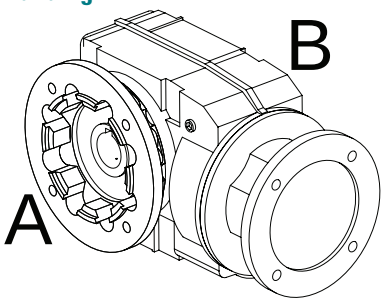

Series C Gearboxes : Non motorised selection

SELECTION OF NON-MOTORISED REDUCER UNITS

(a) Service Factor

From Table 1 select the Mechanical Service Factor (Fm) applicable to the drive. If the unit is to be subjected to frequent stop/starts in excess of 10 times per day then multiply factor Fm by Factor Fs from table 2.

(b) Power Required

Determine either the absorbed torque (Nm) or the input power (kW) required by the machine. The absorbed Torque can be calculated using the following formula:

$$M_2 = \frac{P_2 \times 9550}{n_2}$$

M_2 = required output torque (Nm)
P_2 = absorbed power (kW)
n_2 = machine speed (Rev/Min)

(c) Design Power

Multiply either the absorbed torque (Nm) or the power (kW) by the service factor determined in (a)

(d) Ratio Required

Divide the input shaft speed by the required output shaft speed to determine the gear ratio.

(e) Unit Selection

Refer to the gear ratio closest to the value determined in step (d).
Check in column 3 for the nearest input shaft speed, then read across the table at this speed until a unit is found with either an output torque or input power that equals or exceeds the design power value determined in step (c) above. Column 4 gives the approximate output shaft speed for the selected speed and ratio combination.

TABLE 1 – SERVICE FACTORS (Fm)

Types of Driven Machine	Operational Hours		
	Under 3	3 to 10	Over 10
Uniform Loads Agitators and Mixers – liquid or semi-liquid Blowers – centrifugal Bottling Machines Conveyors and Elevators – uniformly loaded Cookers Laundry Washing Machines – non-reversing Line Shafts Pumps – centrifugal and gear Wire Drawing Machines	0.80	1.00	1.25
Moderate Shock Loads Agitators and Mixers – variable density Conveyors – not uniformly loaded Cranes travel motion and hoisting Drawbench Feeders – pulsating load Hoists Kilns Laundry Tumblers Lifts Pumps – reciprocating with 3 or more cylinders Pump and Paper Making Machinery Rubber Mixers and Calendars Screens – rotary Textile Machinery	1.00	1.25	1.50
Heavy Shock Loads Brick Presses Briquetting Machines Conveyors – reciprocating and shaker Crushers Feeders – reciprocating Hammer Mills Pumps – reciprocating, 1 or 2 cylinders Rubber Masticators Screens – vibrating	1.50	1.75	2.00

TABLE 2 - STARTING FACTOR (Fs)

	Start/stops per hour					
	Up to 1	5	10	40	60	>200
Factor Fs	1.00	1.03	1.06	1.10	1.15	1.20

Series C Gearboxes : Non-motorised selection

DOUBLE REDUCTION - RATINGS AT 1450 RPM

Ratio Code	Nominal Ratio	Output Speed Rev/Min	870		871		872		873		874		875		876		877	
			Input Power kW	Output Torque Nm	Input Power kW	Output Torque Nm	Input Power kW	Output Torque Nm	Input Power kW	Output Torque Nm	Input Power kW	Output Torque Nm	Input Power kW	Output Torque Nm	Input Power kW	Output Torque Nm	Input Power kW	Output Torque Nm
01	8	181	1.72	80	2.84	137	4.39	209	7.62	372	12.90	618	20.70	977	43.20	2120	75.90	38730
02	11.2	131	1.39	87	2.31	149	3.62	238	6.26	427	11.10	734	19.70	1320	35.90	2420	62.70	4300
03	12.5	121	1.27	90	2.11	154	3.42	247	5.85	446	10.30	768	18.50	1380	33.60	2540	59.60	4450
04	14	104	1.16	93	1.94	159	3.17	259	5.46	466	9.75	796	17.30	1430	31.40	2650	55.30	4680
05	16	90	1.11	87	1.78	144	3.86	320	6.03	517	7.81	716	15.20	1390	26.40	2580	47.70	4730
06	18	80	0.97	99	1.62	168	2.74	282	4.72	508	8.29	879	14.80	1580	26.90	2920	47.20	5180
07	20	72	0.92	101	1.54	171	2.54	295	4.37	531	7.66	921	13.80	1650	25.20	3040	45.10	5330
08	22	66	0.91	94	1.45	156	3.03	345	4.87	579	6.19	781	12.30	1580	22.00	2820	39.00	5390
09	25	58	0.83	97	1.33	161	2.83	352	4.49	594	5.69	803	11.60	1650	20.30	3050	36.90	5540
10	28	52	0.77	101	1.23	167	2.59	362	4.13	611	5.30	822	10.80	1700	19.00	3180	33.60	5710
11	32	45	0.64	113	1.08	192	1.93	341	3.26	623	5.87	1070	10.30	1950	19.00	3590	33.10	6400
12	36	40	0.65	107	1.03	176	2.16	378	3.45	637	4.35	872	8.88	1800	16.30	3490	27.50	6060
13	40	36	0.61	110	0.98	179	1.97	388	3.13	651	3.95	895	8.14	1840	15.20	3640	26.00	6150
14	45	32	0.52	122	0.87	206	1.52	382	2.60	695	4.66	1200	8.43	2170	15.20	4030	27.20	7140
15	50	29	0.46	127	0.76	209	1.44	391	2.49	709	4.30	1250	7.79	2250	13.90	4090	25.40	7390
16	56	26	0.48	120	0.77	196	1.58	415	2.49	698	3.16	946	6.35	1960	12.40	4060	19.40	6620
17	63	23	0.44	124	0.70	202	1.45	427	2.24	721	2.84	970	5.64	2010	11.40	4240	17.60	6770
18	71	20	0.38	143	0.54	206	1.06	406	1.87	766	3.38	1340	6.18	2490	10.40	4260	20.10	8250
19	80	18	0.35	147	0.46	192	0.94	404	1.71	766	3.10	1340	5.79	2560	9.51	4300	17.80	8390
20	90	16	0.37	139	0.59	227	1.15	478	1.72	766	2.13	1030	4.39	2120	9.11	4710	13.70	7120
21	100	14	0.33	143	0.53	234	1.08	482	1.62	766	1.94	1050	3.99	2160	8.48	4850	12.60	7240
22	112	13	0.23	129	0.30	130	0.70	393	1.24	748	2.27	1340	4.71	2760	7.22	4440	13.70	8650
23	125	12	0.20	127	0.19	128	0.61	386	0.79	530	1.75	1140	4.26	2850	6.53	4490	11.80	7980
24	140	10	0.25	149	0.42	252	0.77	482	1.14	766	1.52	1120	3.07	2310	6.68	5290	9.62	7760
25	160	9	0.23	149	0.39	257	0.69	482	1.05	766	1.41	1140	2.85	2350	6.22	5420	8.62	7960
26	212	7	0.17	149	0.30	206	0.53	482	0.79	766	1.10	1200	2.27	2470	4.74	5580	6.80	7370
27	250	6	0.15	149	0.20	201	0.47	482	0.71	766	1.01	1220	2.03	2530	4.25	5580	6.43	8470

Note; For ratings at input speeds other than 1450 rev/min, contact your local Authorised Distributor

TRIPLE REDUCTION - RATINGS AT 1450 RPM

Ratio Code	Nominal Ratio	Output Speed Rev/Min	870		871		872		873		874	
			Input Power kW	Output Torque Nm	Input Power kW	Output Torque Nm	Input Power kW	Output Torque Nm	Input Power kW	Output Torque Nm	Input Power kW	Output Torque Nm
40	100	14.5	0.289	149	0.389	204	0.753	401	1.360	766	2.440	1340
41	118	12.3	0.254	149	0.340	203	0.659	399	1.200	766	2.110	1340
42	132	11.0	0.276	148	0.435	239	0.841	482	1.260	766	1.660	1100
43	150	9.7	0.260	149	0.416	245	0.784	482	1.120	766	1.510	1120
44	160	9.1	0.190	149	0.252	201	0.489	395	0.846	766	1.510	1340
45	180	8.1	0.163	149	0.216	200	0.418	393	0.781	766	1.420	1340
46	200	7.3	0.185	149	0.334	276	0.560	482	0.840	766	1.170	1190
47	225	6.4	0.163	149	0.296	278	0.493	482	0.745	766	1.040	1220
48	265	5.5	0.118	149	0.154	198	0.300	389	0.550	766	0.980	1340
49	280	5.2	0.107	149	0.139	197	0.270	388	0.490	766	0.897	1340
50	315	4.6	0.123	149	0.223	278	0.372	482	0.530	766	0.779	1270
51	360	4.0	0.106	149	0.192	278	0.320	482	0.490	766	0.731	1270
52	400	3.6	0.078	149	0.101	195	0.196	385	0.374	766	0.664	1340
53	450	3.2	0.069	149	0.089	195	0.172	384	0.331	766	0.594	1340
54	500	2.9	0.077	149	0.140	278	0.233	482	0.348	766	0.505	1270
55	560	2.6	0.069	149	0.127	278	0.211	482	0.311	766	0.463	1270
56	800	1.8	0.051	149	0.093	278	0.155	482	0.239	766	0.342	1260
57	900	1.6	0.045	149	0.082	278	0.137	482	0.212	766	0.306	1260

Note; For ratings at input speeds other than 1450 rev/min contact your local Distributor
For output speeds below 6 rev/min in sizes 875–877 consult your local Distributor

Series C Gearboxes : Non motorised selection

Foot Mounted Reducer - with output shaft

Double/Triple Reduction

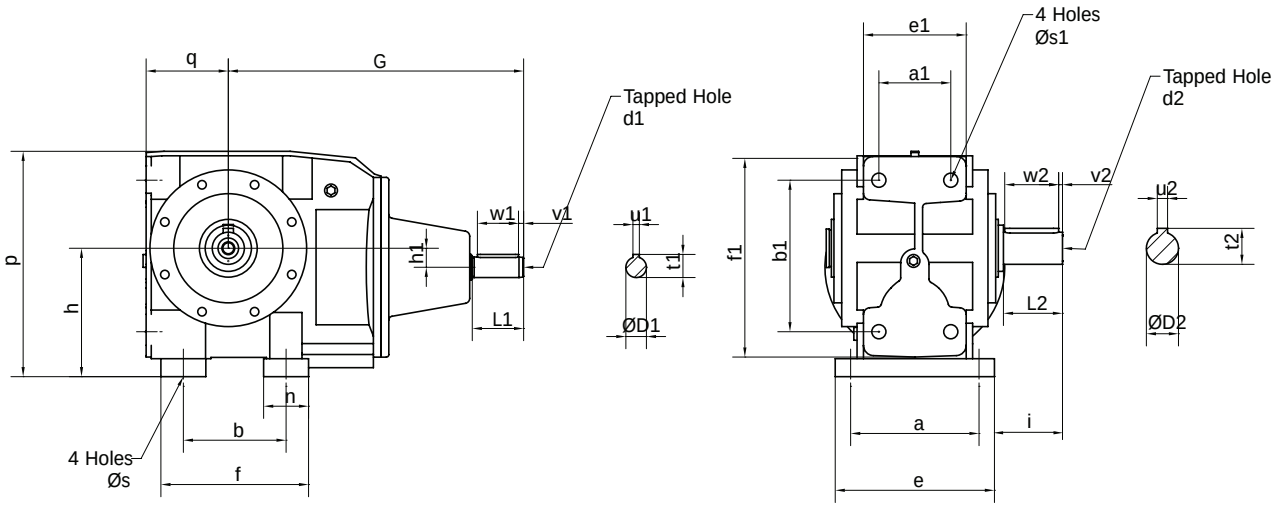

Unit Size	a	b	c	e	f	h	h1	i	n	p	q	s	a1	b1	e1	f1	h1	s1	Output Shaft Dimensions						
																			D2	L2	t2	u2	v2	w2	d2
870	90	63	9	110	88	80	5.3	55	25	148	63	9	54	40	70	139	5.3	M8x1.25 x 15 deep	Ø20 k6	35	22.5	6	3	31	M6 x 1.0 x 16 deep
871	100	80	14	124	115	100	15	65	35	175	78	11	56	65	80	158	15	M10x1.5 x 20 deep	Ø25 k6	46	28.0	8	3	42	M10 x 1.5 x 22 deep
872	110	100	16	136	140	112	13	79	40	200	84	11	68	77	86	177	13	M10x1.5 x 18 deep	Ø30 k6	60	33.0	8	3	53	M10 x 1.5 x 22 deep
873	130	130	20	160	172	140	17	95	50	243	110	14	80	96	102	218	17	M12x1.75 x 20 deep	Ø35 k6	63	38.0	10	3	55	M12 x 1.75 x 25 deep
								130											Ø45 k6 *	98	48.5	14	5	80	M16 x 2.0 x 36 deep

*Optional heavy duty output shaft available on request

Input Shaft Details

Unit Size		D1	L1	u1	t1	v1	w1	d1	G	kg
870	Double	16 k6	40	5	18	4	32	M5x0.8 x 12mm	220	11.5
	Triple	16 k6	40	5	18	4	32	M5x0.8 x 12mm	276	15
871	Double	16 k6	40	5	18	4	32	M5x0.8 x 12mm	230	15.5
	Triple	16 k6	40	5	18	4	32	M5x0.8 x 12mm	285	18.5
872	Double	16 k6	40	5	18	4	32	M5x0.8 x 12mm	245	18.5
	Triple	16 k6	40	5	18	4	32	M5x0.8 x 12mm	301	21.5
873	Double	19 k6	40	6	21.5	4	32	M6x1.0 x 16mm	280	33
	Triple	16 k6	40	5	18	4	32	M5x0.8 x 12mm	346	39

Recommended Fixing Bolts

Unit Size		Fasteners and Tightening Torque
870	Size	4 off M8 x 20mm long
	Nm	Tighten to - 25Nm
871	Size	4 off M10 x 30mm long
	Nm	Tighten to - 50Nm
872	Size	4 off M10 x 30mm long
	Nm	Tighten to - 50Nm
873	Size	4 off M12 x 40mm long
	Nm	Tighten to 85Nm

Handing

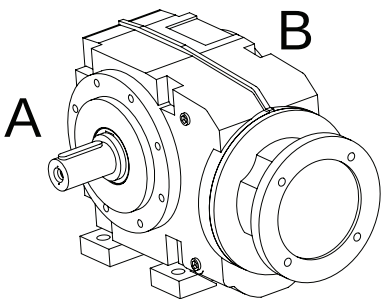

Series C Gearboxes : Non-motorised dimensions

Foot Mounted Reducer - with output shaft

Double/Triple Reduction

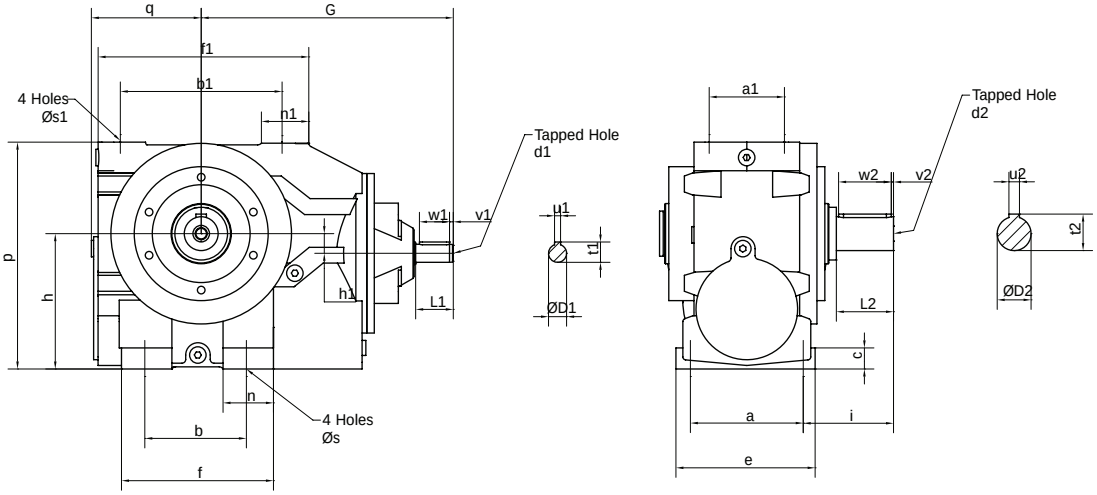

Unit Size	a	b	c	e	f	h	h1	i	n	p	q	s	a1	b1	e1	f1	h1	s1	SHAFT DIMENSIONS						
																			D2	L2	t2	u2	v2	w2	d2
874	150	135	28	185	202	180	26	120	67	302	143	18	100	215	280	26	63	M20x2.5 x 34 deep	Ø45 k6	76	48.5	14	3	70	M16 x 2.0 x 36 deep
875	200	180	35	250	260	225	28	155	80	375	168	22	120	250	326	28	71	M20x2.5 x 34 deep	Ø60 m6	120	64.0	18	3	110	M12 x 1.75 x 28 deep
876	250	235	40	305	320	280	40	170	85	457	195	26	135	290	380	40	85	M24x3.0 x 45 deep	Ø70 m6	135	74.5	20	3	125	M16 x 2.0 x 36 deep
877	300	310	45	360	420	335	65	216	110	565	235	26	150	345	460	65	107	M24x3.0 x 45 deep	Ø90 m6	170	95.0	25	3	160	M16 x 2.0 x 36 deep

Input Shaft Details

Unit Size		D1	L1	u1	t1	v1	w1	d1	G	kg
874	Double	24 k6	50	8	27	5	40	M8x1.25 x 19mm	335	75
	Triple	19 k6	40	6	21.5	4	32	M6x1.0 x 16mm	417	82
875	Double	28 k6	60	8	31	5	50	M10x1.5 x 22mm	415	119
876	Double	38 k6	80	10	41	5	70	M12x1.75 x 28mm	495	183
877	Double	42 k6	110	12	45	10	70	M16x2.0 x 36mm	588	329

Recommended Fixing Bolts

Unit Size		Fasteners and Tightening Torque
874	Size	4 off M16 x 50mm long
	Nm	Tighten to 200Nm
875	Size	4 off M20 x 65mm long
	Nm	Tighten to 350Nm
876	Size	4 off M24 x 75mm long
	Nm	Tighten to 610Nm
877	Size	4 off M24 x 80mm long
	Nm	Tighten to 610Nm

Handing

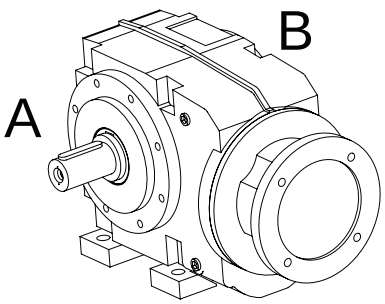

Series C Gearboxes : Non motorised selection

Shaft Mounted Reducer - with torque arm

Double/Triple Reduction

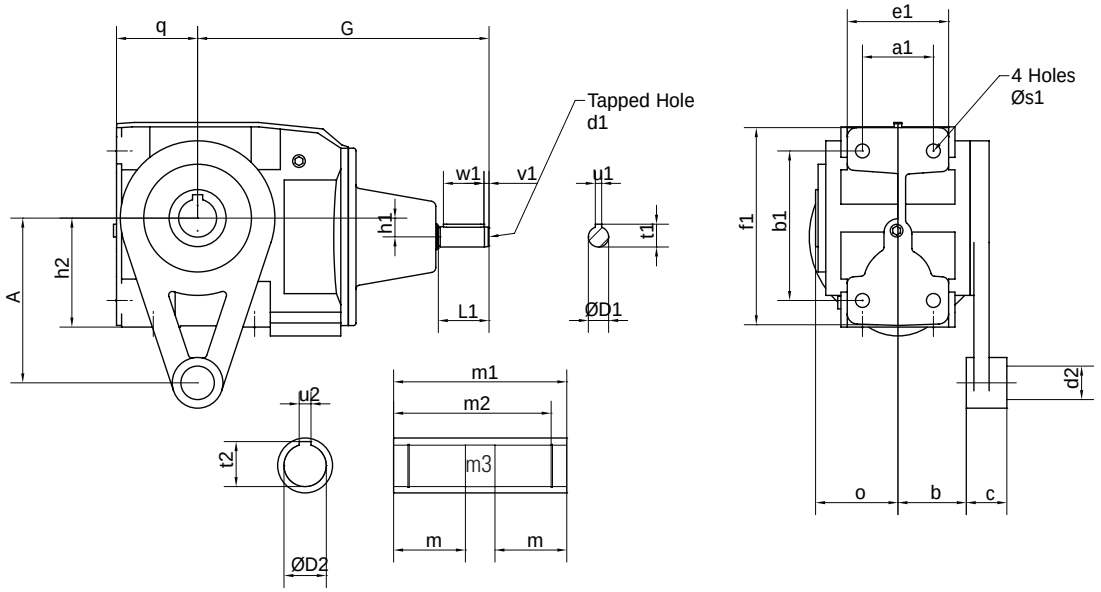

Unit Size	A	b	c	d2	h2	o	q	a1	b1	e1	f1	h1	s1	Shaft Dimensions							
														D2	m1	t2	u2	m	m2	m3	Shaft Fixing Bolt
870	110	47	36	10.3	79.5	62	54	54	40	70	139	5.3	M8x1.25 x 15 deep	Ø20 H7	124	22.8	6	52	104	20.2	M6 x 1.0 x 40mm long
871	130	52	36	10.3	93	65	64	56	65	80	158	15	M10x1.5 x 20 deep	Ø25 H7 *	130	28.3	8	54	122	30.2	M10 x 1.5 x 50mm long
														Ø30 H7	130	33.3	8	54	122	30.2	M10 x 1.5 x 50mm long
872	160	52	36	10.3	112	70	68	68	77	86	177	13	M10x1.5 x 18 deep	Ø30 H7 *	140	33.3	8	56	127	35.3	M10 x 1.5 x 50mm long
														Ø35 H7	140	38.3	10	56	127	35.3	M12 x 1.75 x 55mm long
873	200	71.5	44	16.5	139.5	90	90	80	96	102	218	17	M12x1.75 x 20 deep	Ø40 H7 *	180	43.3	12	70	156	45.3	M16 x 2.0 x 70mm long
														Ø45 H7	180	48.3	14	70	156	45.3	M16 x 2.0 x 70mm long

* Alternate bore option

Input Shaft Details

Unit Size		D1	L1	u1	t1	v1	w1	d1	G	kg
870	Double	16 k6	40	5	18	4	32	M5x0.8 x 12mm	220	11.5
	Triple	16 k6	40	5	18	4	32	M5x0.8 x 12mm	276	15
871	Double	16 k6	40	5	18	4	32	M5x0.8 x 12mm	230	15.5
	Triple	16 k6	40	5	18	4	32	M5x0.8 x 12mm	285	18.5
872	Double	16 k6	40	5	18	4	32	M5x0.8 x 12mm	245	18.5
	Triple	16 k6	40	5	18	4	32	M5x0.8 x 12mm	301	21.5
873	Double	19 k6	40	6	21.5	4	32	M6x1.0 x 16mm	280	33
	Triple	16 k6	40	5	18	4	32	M5x0.8 x 12mm	346	39

Torque Arms

Unit Size		
870	Part Number	870A9600
	Available Positions	90° increments
871	Part Number	871A9600
	Available Positions	45° increments
872	Part Number	872A9600
	Available Positions	45° increments
873	Part Number	873A9600
	Available Positions	45° increments

Handing

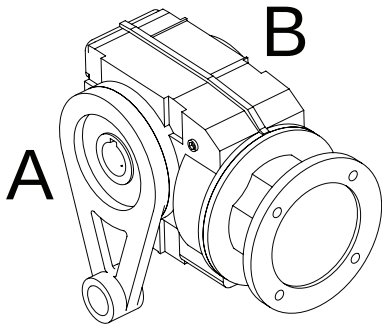

Series C Gearboxes : Non-motorised dimensions

Shaft Mounted Reducer - with torque arm

Double/Triple Reduction

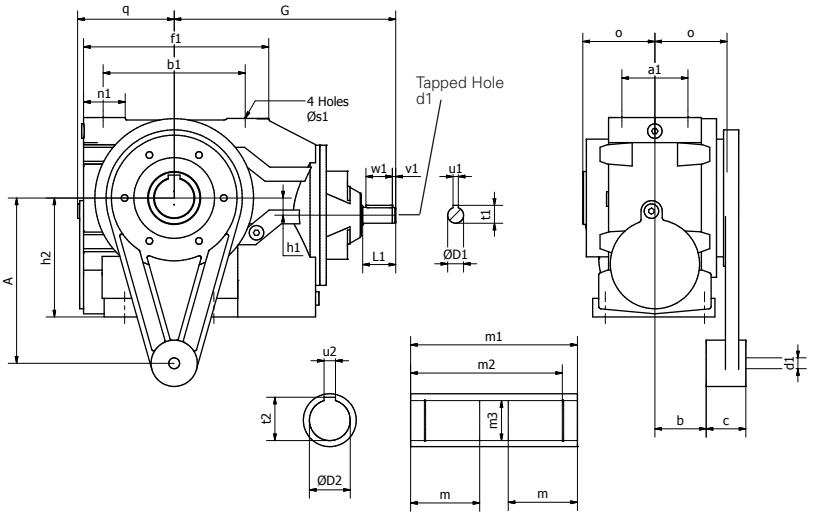

Unit Size	A	b	c	d1	h2	o	q	a1	b1	f1	h1	n1	s1	Shaft Dimensions							
														D2	m1	t2	u2	m	m2	m3	Shaft Fixing Bolt
874	250	77.5	60	16.4	180	109	143	100	215	280	26	63	M20x2.5 x 34 deep	Ø50 H7 *	76	48.5	14	3	70	70	M16 x 2.0 x 36 deep
														Ø60 H7	76	48.5	14	3	70	70	M16 x 2.0 x 36 deep
875	310	85.5	60	16.4	225	125	168	120	250	326	28	71	M20x2.5 x 34 deep	Ø60 H7 *	120	64.0	18	3	110	110	M12 x 1.75 x 28 deep
														Ø70 H7	120	64.0	18	3	110	110	M12 x 1.75 x 28 deep
876	380	98	80	25	280	150	195	135	290	380	40	85	M24x3.0 x 45 deep	Ø70 H7 *	135	74.5	20	3	125	125	M16 x 2.0 x 36 deep
														Ø90 H7	135	74.5	20	3	125	125	M16 x 2.0 x 36 deep
877	430	137	80	25	335	175	235	150	345	460	65	107	M24x3.0 x 45 deep	Ø80 H7 *	170	95.0	25	3	160	160	M16 x 2.0 x 36 deep
														Ø100 H7	170	95.0	25	3	160	160	M16 x 2.0 x 36 deep

* Alternate bore option

Input Shaft Details

Unit Size		D1	L1	u1	t1	v1	w1	d1	G	kg
874	Double	24 k6	50	8	27	5	40	M8x1.25 x 19mm	335	75
	Triple	19 k6	40	6	21.5	4	32	M6x1.0 x 16mm	417	82
875	Double	28 k6	60	8	31	5	50	M10x1.5 x 22mm	415	119
876	Double	38 k6	80	10	41	5	70	M12x1.75 x 28mm	495	183
877	Double	42 k6	110	12	45	10	70	M16x2.0 x 36mm	588	329

Torque Arms

Unit Size		Part Number
874	Part Number	874A9600
	Available Positions	60° increments
875	Part Number	875A9600
	Available Positions	45° increments
876	Part Number	876A9600
	Available Positions	60° increments
877	Part Number	877A9600
	Available Positions	36° increments

Handing

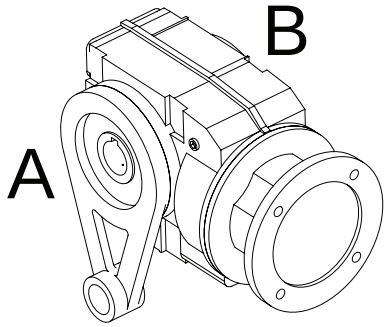

Series C Gearboxes : Non motorised selection

Shaft Mounted Reducer - with flange

Double/Triple Reduction

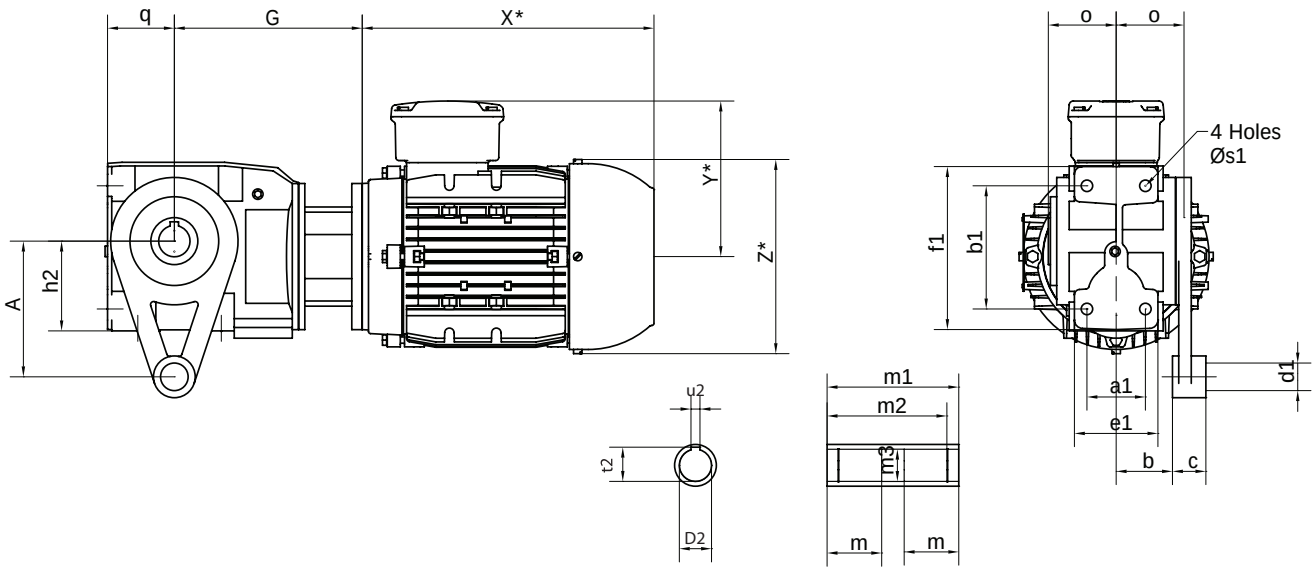

Unit Size	Flange Dimensions						h2	h1	q	o	i	Hollow Bore							
	Øa	Øb	c	Øe	n	Øs						D2	m1	t2	u2	m	m2	m3	Shaft Fixing Bolt
870	120 **	80 j6	8	100	4	6.6	70.5	5.3	54	62	75	Ø20 H7	124	22.8	6	52	104	20.2	M6 x 1.0 x 40mm long
	160	110 j6	10	130	4	9													
871	160	110 j6	10	130	4	9	86	15	64	65	86	Ø25 H7 *	130	28.3	8	54	122	30.2	M10 x 1.5 x 50mm long
												Ø30 H7	130	33.3	8	54	122	30.2	M10 x 1.5 x 50mm long
872	200	130 j6	12	165	4	11	96	13	68	70	107	Ø30 H7 *	140	33.3	8	56	127	35.3	M10 x 1.5 x 50mm long
												Ø35 H7	140	38.3	10	56	127	35.3	M12 x 1.75 x 55mm long
873	200	130 j6	12	165	4	11	119.5	17	90	90	120	Ø40 H7 *	180	43.3	12	70	156	45.3	M16 x 2.0 x 70mm long
												Ø45 H7	180	48.3	14	70	156	45.3	M16 x 2.0 x 70mm long

* Alternate bore option
** Alternate flange option

Input Shaft Details

Unit Size		D1	L1	u1	t1	v1	w1	d1	G	kg
870	Double	16 k6	40	5	18	4	32	M5x0.8 x 12mm	220	11.5
	Triple	16 k6	40	5	18	4	32	M5x0.8 x 12mm	276	15
871	Double	16 k6	40	5	18	4	32	M5x0.8 x 12mm	230	15.5
	Triple	16 k6	40	5	18	4	32	M5x0.8 x 12mm	285	18.5
872	Double	16 k6	40	5	18	4	32	M5x0.8 x 12mm	245	18.5
	Triple	16 k6	40	5	18	4	32	M5x0.8 x 12mm	301	21.5
873	Double	19 k6	40	6	21.5	4	32	M6x1.0 x 16mm	280	33
	Triple	16 k6	40	5	18	4	32	M5x0.8 x 12mm	346	39

Output Flange/Shaft

Unit Size		Part No
870 **	Output Flange	870A9990
	Extended Shaft	870A9790
870	Part Number	870A9900
	Fixing Bolts	870A9790
871	Part Number	871A9900
	Fixing Bolts	871A9790
872	Part Number	872A9900
	Fixing Bolts	872A9790
873	Part Number	873A9900
	Fixing Bolts	873A9790

Handing

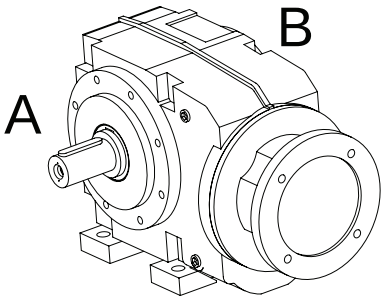

Series C Gearboxes : Non-motorised dimensions

Shaft Mounted Reducer - with flange

Double/Triple Reduction

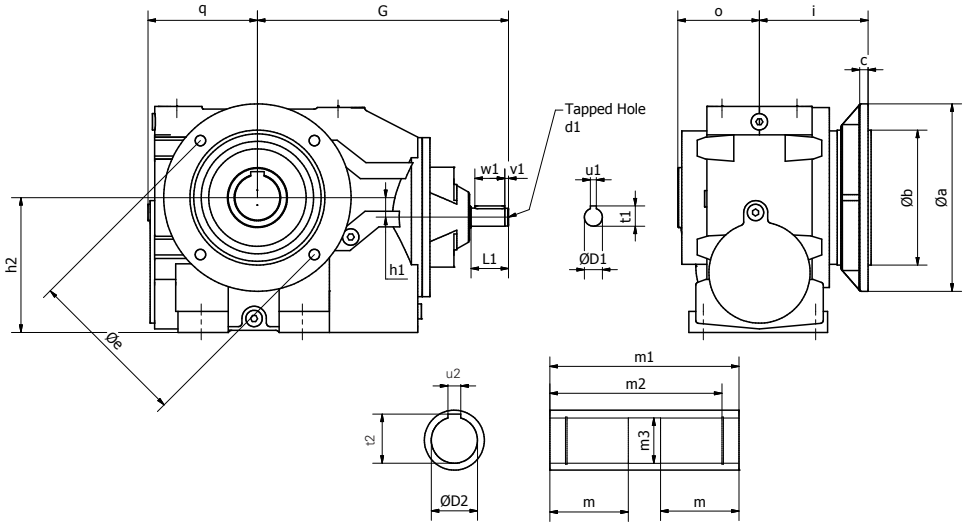

Unit Size	Flange Dimensions						h2	h1	q	o	i	Shaft Dimensions							
	Øa	Øb	c	Øe	n	Øs						D2	m1	t2	u2	m	m2	m3	Shaft Fixing Bolt
874	250	180 j6	12	215	4	14	180	26	143	109	145	Ø50 H7 *	76	48.5	14	3	70	70	M16 x 2.0 x 36 deep
												Ø60 H7	76	48.5	14	3	70	70	M16 x 2.0 x 36 deep
875	350	250 h6	18	300	4	18	225	28	168	125	170	Ø60 H7 *	120	64.0	18	3	110	110	M12 x 1.75 x 28 deep
												Ø70 H7	120	64.0	18	3	110	110	M12 x 1.75 x 28 deep
876	450	350 h6	20	400	8	18	280	40	195	150	200	Ø70 H7 *	135	74.5	20	3	125	125	M16 x 2.0 x 36 deep
												Ø90 H7	135	74.5	20	3	125	125	M16 x 2.0 x 36 deep
877	450	350 h6	22	400	8	18	335	65	235	175	232	Ø80 H7 *	170	95.0	25	3	160	160	M16 x 2.0 x 36 deep
												Ø100 H7	170	95.0	25	3	160	160	M16 x 2.0 x 36 deep

* Alternate bore option

Input Shaft Details

Unit Size		D1	L1	u1	t1	v1	w1	d1	G	kg
874	Double	24 k6	50	8	27	5	40	M8x1.25 x 19mm	335	75
	Triple	19 k6	40	6	21.5	4	32	M6x1.0 x 16mm	417	82
875	Double	28 k6	60	8	31	5	50	M10x1.5 x 22mm	415	119
876	Double	38 k6	80	10	41	5	70	M12x1.75 x 28mm	495	183
877	Double	42 k6	110	12	45	10	70	M16x2.0 x 36mm	588	329

Output Flange/Shaft

Unit Size		Part Number
874	Output Flange	874A9900
	Extended Shaft	874A9790
875	Output FInage	875A9900
	Extended Shaft	875A9790
876	Output Flange	876A9900
	Extended Shaft	876A9790
877	Output Flange	877A9900
	Extended Shaft	877A9790

Handing

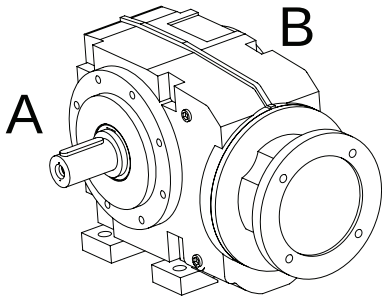

Series C Gearboxes : Dimensions (B14) Flange

871, 872, 873 & 875
Eight Hole Pattern

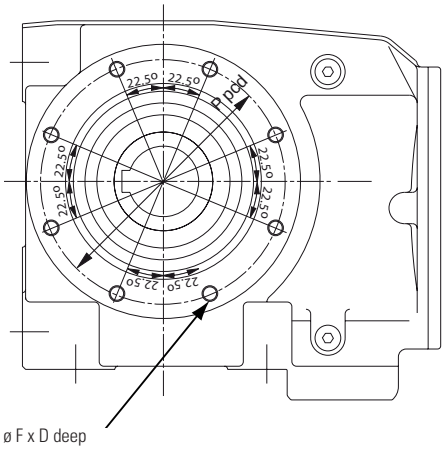

870
Four Hole Pattern

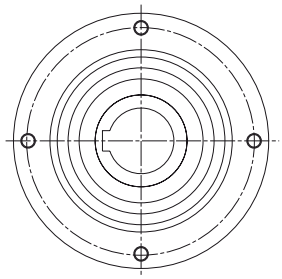

874 & 876
Six Hole Pattern

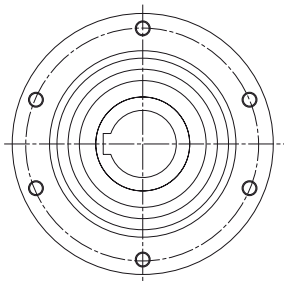

877
Ten Hole Pattern

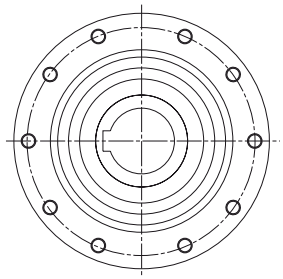

Size	P pcd	F Thread Diameter	N No. of Holes	D Deep
870	90	M8 x 1.25	4	22
871	107	M8 x 1.25	8	22
872	130	M8 x 1.25	8	22
873	155	M10 x 1.5	8	27
874	150	M12 x 1.75	6	22
875	195	M12 x 1.75	8	21
876	230	M16 x 2.0	6	27
877	280	M16 x 2.0	10	27

Extended Shaft Option (for flange mounted units)

Unit Size	o	i	D2	L2	t2	u2	v2	w2	d2	Extended Shaft	Output Flange
870	62	75	Ø20 k6	35	22.5	6	3	31	M6 x 1.0 x 16 deep	870A9900	870A9790
871	65	86	Ø25 k6	46	28.0	8	3	42	M10 x 1.5 x 22 deep	871A9900	871A9790
872	70	107	Ø30 k6	60	33.0	8	3	53	M10 x 1.5 x 22 deep	872A9900	872A9790
873	90	120	Ø35 k6	63	38.0	10	3	55	M12 x 1.75 x 25 deep	873A9900	873A9790
874	109	145	Ø45 k6	76	48.5	14	3	70	M16 x 2.0 x 36 deep	874A9900	874A9790
875	125	170	Ø60 m6	120	64.0	18	3	110	M12 x 1.75 x 28 deep	875A9900	875A9790
876	150	200	Ø70 m6	135	74.5	20	3	125	M16 x 2.0 x 36 deep	876A9900	876A9790
877	175	232	Ø90 m6	170	95.0	25	3	160	M16 x 2.0 x 36 deep	877A9900	877A9790

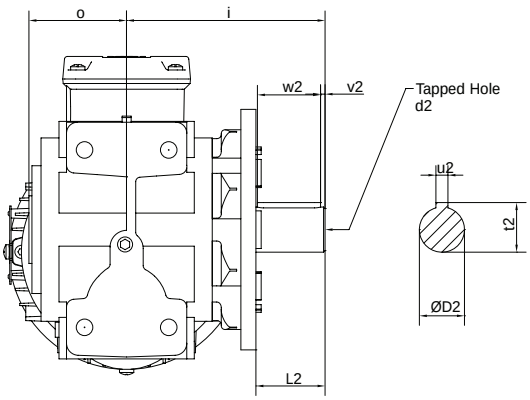

Series C Gearboxes : Exact Ratios

DOUBLE REDUCTION

Code	870	871	872	873	874	875	876	877	Final Reduction Worm Ratio
01	8.59	8.59	8.31	8.23	7.90	7.77	7.97	7.95	10 : 1
02	11.61	11.61	11.66	11.57	10.94	11.01	10.98	11.11	10 : 1
03	13.20	13.20	12.85	12.97	12.29	12.24	12.30	12.08	10 : 1
04	14.95	14.95	14.59	14.56	13.52	13.61	13.81	13.72	10 : 1
05	16.36	16.36	16.09	15.93	15.80	15.54	16.68	16.63	20 : 1
06	19.13	19.13	18.53	18.49	17.66	17.60	17.79	17.87	10 : 1
07	20.61	20.61	21.05	20.96	20.07	19.76	19.88	19.29	10 : 1
08	22.11	22.11	22.56	22.40	21.89	22.03	22.96	23.23	20 : 1
09	25.14	25.14	24.86	25.11	24.59	24.47	25.73	25.27	20 : 1
10	28.48	28.48	28.24	28.18	27.03	27.22	28.89	28.70	20 : 1
11	33.71	33.71	32.55	33.48	30.81	31.78	31.43	31.85	10 : 1
12	36.43	36.43	35.86	35.79	35.31	35.20	37.22	37.38	20 : 1
13	39.26	39.26	40.74	40.57	40.15	39.51	41.59	40.36	20 : 1
14	45.50	45.50	46.84	47.32	44.13	43.64	44.55	43.65	10 : 1
15	53.31	53.31	50.93	50.52	49.90	49.26	49.49	48.51	10 : 1
16	56.19	56.19	55.45	55.71	53.63	54.60	57.66	58.85	20 : 1
17	64.21	64.21	63.00	64.80	61.62	63.56	65.74	66.63	20 : 1
18	74.55	74.55	73.37	73.92	69.00	69.64	69.91	69.18	10 : 1
19	82.83	82.83	82.67	80.94	75.56	76.50	77.18	79.71	10 : 1
20	86.67	86.67	90.67	91.58	88.26	87.29	93.18	91.32	20 : 1
21	101.50	101.50	98.57	97.78	99.79	98.53	103.50	101.50	20 : 1
22	114.30	114.30	109.10	110.60	104.30	102.40	106.20	107.80	10 : 1
23	129.90	129.90	124.00	124.00	115.90	117.90	119.40	115.80	10 : 1
24	142.00	142.00	142.00	143.10	138.00	139.30	146.20	144.70	20 : 1
25	157.80	157.80	160.00	156.70	151.10	153.00	161.40	166.70	20 : 1
26	217.80	217.80	211.10	214.00	208.60	204.80	222.10	225.50	20 : 1
27	247.50	247.50	240.00	240.00	231.80	235.80	249.70	242.30	20 : 1

TRIPLE REDUCTION

Code	870	871	872	873	874	Final Reduction Worm Ratio
40	105.4	105.4	103.9	103.9	97.3	10:1
41	120.4	120.4	118.7	118.0	113.2	10:1
42	130.1	130.1	130.4	130.0	125.0	20:1
43	140.2	140.2	140.5	147.7	141.7	20:1
44	162.5	162.5	160.3	169.8	160.0	10:1
45	190.4	190.4	187.8	184.6	170.8	10:1
46	200.7	200.7	201.1	201.0	194.7	20:1
47	229.3	229.3	229.8	228.4	226.4	20:1
48	266.3	266.3	262.6	266.0	249.9	10:1
49	295.8	295.8	291.8	299.7	273.7	10:1
50	309.5	309.5	310.2	328.7	320.0	20:1
51	362.6	362.6	363.4	357.3	341.6	20:1
52	408.3	408.3	402.7	395.4	373.8	10:1
53	464.1	464.1	457.7	449.5	419.3	10:1
54	507.1	507.1	508.2	514.8	499.9	20:1
55	563.5	563.5	564.7	580.0	547.4	20:1
56	777.8	777.8	779.4	765.3	747.7	20:1
57	883.9	883.9	885.8	870.0	838.5	20:1

OPTION CODES

Part Description	Unit Size							
	870	871	872	873	874	875	876	877
Single Ext Output Shaft (std)	870A9700	871A9700	872A9700	873A9700	874A9700	875A9700	876A9700	877A9700
Double Ext Output Shaft (std)	870A9800	871A9800	872A9800	873A9800	874A9800	875A9800	876A9800	877A9800
Single Ext Output Shaft (Flange mtd)	870A9750	871A9750	872A9750	873A9750	874A9750	875A9750	876A9750	877A9750
Single Ext Output Shaft (Heavy Duty)	NA	NA	NA	873A9701	NA	NA	NA	NA
Torque Arm	870A9600	871A9600	872A9600	873A9600	874A9600	875A9600	876A9600	877A9600
Output Flange (std)	870A9900	871A9900	872A9900	873A9900	874A9900	875A9900	876A9900	877A9900
Output Flange (reduced Ø)	870A9990	NA	NA	NA	NA	NA	NA	NA
Feet	870A9500	871A9500	872A9500	873A9500	Incl	Incl	Incl	Incl
Protective Output Cover	870A9400	871A9400	872A9400	873A9400	874A9400	875A9400	876A9400	877A9400

Series C Gearboxes : Overhgung Load Capacities and Ordering Instructions

OVERHUNG LOAD CAPACITIES

Units are fitted with output bearings of ample proportions to cater for the radial and thrust loads imposed by the worm gear, leaving sufficient capacity for taking overhung loads.

The calculated overhung load should be compared with the value in the selection tables.

These values may be exceeded at lower input speeds or if limited bearing lives are acceptable. In cases where higher overhung load capacities are necessary consult your Authorised Distributor, quoting details of power, speed, direction of gearbox rotation, angle of application of load, distance of load application from gearbox and acceptable bearing life.

SERIES C

Unit Size	A mm
870	17.5
871	23.0
872	30.0
873	31.5
874	38.0
875	60.0
876	67.5
877	85.0

To determine the overhung load when a sprocket, gear or 'V' pulley is fitted to the output shaft, one of the following formulae may be used in the absence of accurate information.

(1) Calculation on a basis of Torque

$$\text{Overhung load (N)} = \frac{T \times 1000 \times K}{r}$$

(2) Calculation on a basis of Power

$$\text{Overhung load (N)} = \frac{kW \times 9550 \times 1000 \times K}{n \times r}$$

Where:

M_2 = Absorbed torque at shaft in Nm.
P_2 = Absorbed power at shaft (kW).
r = Pitch radius of sprocket, gear or 'V' pulley in mm.
n_2 = Rev/min output shaft.
K = Application factor -
1.00 for a sprocket
1.25 for a gear or timing pulley
1.50 for a 'V' pulley

Overhung loads may be reduced by one of the following methods:

(1) Increase the diameter of the sprocket, gear or pulley within reasonable limits.

(2) Mount the sprocket, gear or pulley on a separate shaft, supported with bearings and couple to the output shaft by means of a Fenner shaft coupling.

(3) Use a special extended output shaft and support the free end with an outrigger bearing.

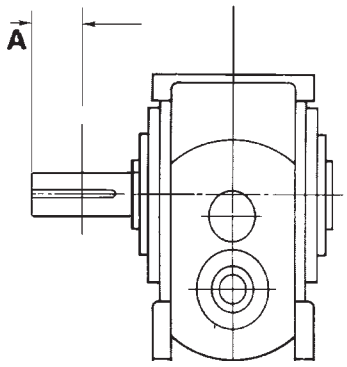

ORDERING INSTRUCTIONS

All Series C motorised worm gear units fitted with a standard electric motor are identified by an eight digit code taken from the selection tables.

If an alternative motor type is required a ninth digit is added to the standard code.

FIRST THREE DIGITS:
Gearmotor type and size

FOURTH DIGIT:
Type of assembly required.

A: Geared motor (standard bore)
Z: Geared motor (alternate bore)
D: Reducer (standard bore)
Y: Reducer (alternate bore)
G: Motor ready (standard bore)
X: Motor ready (alternate bore)

FIFTH AND SIXTH DIGIT:
Ratio Code. Exact ratios can be found on page 243.

SEVENTH/EIGHTH DIGIT:
Type of drive code

1. Motorised units - use complete code from selection tables.
2. Input Reducer assembly - use 00.
3. Motor ready units are supplied to fit standard IEC motor insert frame code from table opposite.

NINTH DIGIT:
Type of motor variant

Use eight digit code obtained from selection tables for required motor power and speed and then add the relevant letter code from table opposite of the motor variant required.

Code	Additional Feature
A	Anti-condensation heaters fitted
B	Backstop Fitted
E	Fitted with encoder
M	Brake motor
N	Brake motor with Hand Release
Q	Refer to Original Quote - Special
S	Single Phase motor
T	Fitted with Thermistors
X	Fitted with Variator
Z	Fitted with Force Vent unit

SUFFIX CODES

Code	Additional Feature
/TA	with torque arm
/SOS	with single output shaft
/DOS	with double output shaft
/FT	with bolt on feet

ELECTRIC MOTOR VARIANTS

Fenner gearboxes can be fitted with all standard IEC frame motors. IE2 high efficiency motors are fitted as standard, IE3 premium efficiency motors can also be fitted if required.

Fenner also offer a range of brake motors and options, contact your local Authorised Distributor for more information.

There are a range of modular fitted options such as variators, clutch brakes and backstops available as options.

Code	Frame	Flange
63C	63	B14
63D	63	B5
71C	71	B14
71D	71	B5
80C	80	B14
80D	80	B5
90C	90	B14
90D	90	B5
10C	100	B14
10D	100	B5
11C	112	B14
11D	112	B5
13C	132	B14
13D	132	B5
16D	160	B5
18D	180	B5
20D	200	B5
22D	225	B5
25D	250	B5

Series C Gearboxes : Installation and Maintenance

Satisfactory performance depends on proper installation, lubrication and maintenance. All instructions given in the installation leaflet must be followed carefully.

SHAFT MOUNTING

Ensure that the shaft on to which the gear unit is to be mounted and the gear unit bore are clean and free from burrs.

Liberally smear the shaft and bore with lubricants to aid assembly and prevent fretting corrosion. Slide the unit on to the driven shaft, fit side fitting key. DO NOT USE TAPER OR TOP FITTING KEY.

LUBRICANT TYPE TEMPERATURE RANGE

ISO Viscosity	Ambient Temperature ºC		
	-30º to 20ºC	0ºC to 35ºC	20ºC to 50ºC
Synthetic Oil 1	220	320	460
Synthetic Oil 2	220	220	320

Synthetic Oil 1 = Polyglycol based
Synthetic Oil 2 = Polyalphaolefin based.
We recommend the use of a Polyglycol synthetic oil - see the note below regarding power ratings.

FOOT MOUNTING

Mount the unit securely to a rigid structure. Fit the output extension shaft as required. Use flexible couplings such as Fenaflex for shaft to shaft connections and ensure that shaft misalignment is within the coupling's capacity. When a pulley or sprocket is fitted to either shaft, mount it as close as possible to the gearcase.

When fitting or removing drive components do not hammer on shaft as this will damage the bearings, Fenner Taper Lock bushes permit easy fixing and dismantling without undue force.

LUBRICATION

Sizes 870 to 873 are pre-filled for mounting position B3 with synthetic lubricant. Other mounting positions must be specified on order.
Sizes 874 to 877 are supplied without oil. Before running they should be filled with an appropriate amount of the correct lubricant shown in the table, dependent on the mounting position, see below.
Oil capacities are only approximate and units should be filled until oil escapes from the level plug hole.

WARNING: Do not overfill as excess lubricant may cause overheating and leakage.

OIL CHANGES

Sizes 870 and 871 are lubricated for life except when the units are required to work in an explosive atmosphere. (94/9/EC Atex 100a Group II category 2 zones 1 &21 & category 3 zones 2 & 22). See separate leaflet for recommendations. All other sizes will require an oil change depending on the unit operating temperature. Intial fill of oil should be changed in a new gear unit after 1000 hours operation or one year or half the life in the table below whichever is the soonest.

Unit Op Temp ºC	Renewal Period (Hours)	
	Mineral Oil	Synthetic Oil
65 or less	17000 or 3 Yrs	26000 or 3 Yrs
70	12000 or 3 Yrs	26000 or 3 Yrs
75	8500 or 3 Yrs	22000 or 3 Yrs
80	6000 or 2 Yrs	15000 or 3 Yrs
85	4200 or 17 Mths	10500 or 3 Yrs
90	3000 or 12 Mths	7500 or 2.5 Yrs
95	2100 or 8 Mths	6000 or 2 Yrs
100	1500 or 6 Mths	4500 or 18 Mths

BREATHERS/MOUNTING POSITIONS

Sizes 870 to 873 are supplied for operation without breathers.

Sizes 874 to 877 are supplied for operation with breather but are despatched without oil. It is essential that when the unit is in its operating position the relevant blanking plug is removed and replaced by the breather plug (supplied) in the position indicated on the installation leaflet.

LUBRICANT CAPACITY (LITRES)

Unit Size	Double Reduction								Triple Reduction							
	B3		B8		V5/V6	B7	B6		B3		B8		V5 V6	B7	B6	
	Level 1	Level 2	Level 1	Level 2	All	All	Level 1	Level 2	Level 1	Level 2	Level 1	Level 2	All	All	Level 1	Level 2
870	0.3	-	0.7	-	0.5	0.6	0.7	-	0.4	-	1.2	-	0.8	1.0	1.2	-
871	0.4	-	1.0	-	0.7	0.9	1.0	-	0.5	-	1.5	-	0.9	1.3	1.5	-
872	0.7	-	1.4	-	1.0	1.4	1.4	-	0.9	-	2.1	-	1.4	2.0	1.9	-
873	1.5	-	3.1	-	2.2/2.3	3.0	3.2	-	2.1	-	4.0	-	2.5	4.6	4.0	-
874	4.5	3.0	5.1	3.0	3.7/3.5	5.6	7.4	5.1	4.8	3.8	5.9	3.6	3.7	6.6	9.2	6.9
875	7.1	5.9	9.5	4.8	3.7/6.2	9.6	12	9.5	-	-	-	-	-	-	-	-
876	17	11	17	8.3	12	18	25	17	-	-	-	-	-	-	-	-
877	28	17	26	14	21	31	42	28	-	-	-	-	-	-	-	-

*Level 1 used for output speeds below 1000rpm, Level 2 used for output speeds above 1000rpm

MOUNTING POSITIONS

Standard Floor Mounting B3

Level 1 is the higher level position

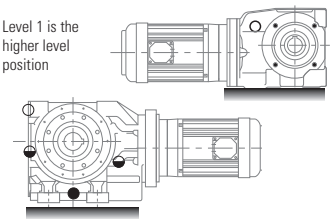

Left Hand Wall Mounting B7†

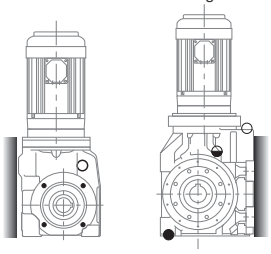

Level 1 is the higher level position

Right Hand Wall Mounting B6†*

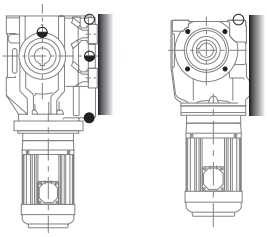

† Gear units for use in mounting positions B6 & B7 should only be selected with overall ratios greater than or equal to those shown in the table below.

* Mounting position B6 is not recommended for geared motors. Consult your local authorised distributor.

Unit Size	Input Speed (rpm)			
	1000	1500	1800	>1800
870-875	All	All	All	Consult you local distributor
876	18:1	18:1	25:1	
877	18:1	40:1	63:1	

Standard Ceiling Mounting B8

Level 1 is the higher level position

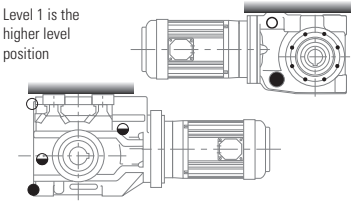

Wall Mounting Shaft Down (V5)

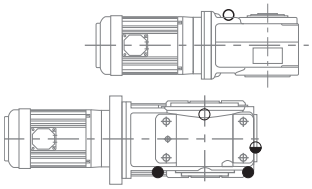

Wall Mounting Shaft Up (V6)

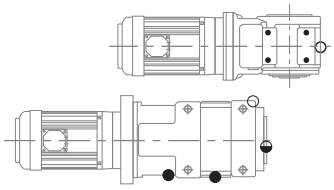

Plug positions apply for sizes 874 and larger.

○ Ventilator/Filling Position
◒ Level Position
● Drain Position

Series C Gearboxes : Installation and Maintenance

Section 9:

Gearboxes: Series F

The new Fenner® Series F geared motor range is primarily designed as a compact shaft mounted unit incorporating an integral torque reaction bracket.

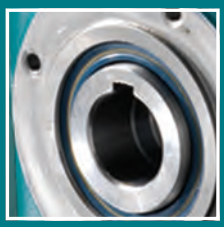

- New range now has 11 sizes
- Input power up to 110kW
- Output torque up to 16,500 Nm
- Ratios from 5:1 to 350:1 available
- Dimensionally interchangeable with market leaders
- Accepts standard IEC motors
- ATEX certification available

Geared Drives: Design Data Required	
Motorised (integral motor) or non-motorised?	> If motorised: electrical supply available any special motor features required (brake, thermistors, flameproof etc.) > If non-motorised: type of prime mover rotational speed of prime mover power rating of prime mover is an input shaft coupling required? If so, prime mover shaft dia.
Shaft mounting or flange mounted?	> If shaft mounted, machine shaft diameter/length > if flange mounted, is an output shaft and coupling required?
Type of driven machine	
Rotational speed of driven machine	> constant or variable over what range?
Power absorbed by driven machine (or required output torque)	
Hours/day duty & start/stop frequency	

Series F	Page
Motorised Selection	249
Motorised Dimensions	250
Non Motorised Selection	266
Reducer Dimensions	273
Exact Ratios	274
B14 Flange Dimensions	275
Overhung Loads	276
Installation & Maintenance	277
Lubrication	278
Torque Bush Dimensions	279
Ordering Instructions	280

Visit www.fptgroup.com

SERIES F

Highly Efficient and Versatile.

Compact solutions

- New range now has 11 sizes
- Input power up to 110kW
- Output torque up to 16,500 Nm
- Ratios from 5:1 to 350:1 available
- Dimensionally interchangeable with market leaders
- Accepts standard IEC motors
- ATEX certification available

Fenner®

THE MARK OF ENGINEERING EXCELLENCE

www.fptgroup.com

Series F Gearboxes : Motorised selection

MOTORISED UNITS SELECTION PROCEDURE

(a) Service Factor
From Table 1 select the Mechanical Service Factor (Fm) applicable to the drive. If the unit is to be subjected to frequent stop/starts in excess of 10 times per day then multiply factor Fm by Factor Fs from table 2 below.

(b) Motor Power
Refer to the selection tables on pages 249 to 263 and choose a motor power equal to or in excess of that required, if the motor power is not known then from the formula below determine the power requirements of the driven machine and select a motor power in excess of the calculated machine absorbed power.

$$P_2 = \frac{M_2 \times n_2}{9550}$$

P_2 = machine absorbed power (kW)
M_2 = machine absorbed torque (Nm)
n_2 = machine speed (rev/min)

If the absorbed power is given in kW use the formula below to check the selected unit will give sufficient output torque.
Output torque values for Fenner Series F Gear Motor units are given in column two of the selection tables.

$$M_2 = \frac{P_2 \times 9550}{n}$$

M_2 = machine absorbed torque (Nm)
P_2 = machine absorbed power (kW)
n_2 = machine speed (rev/min)

(c) Unit Selection
Refer to the selection tables on page 249 to 263 and choose the closest above that calculated in step (b). Then read down the column headed "Nominal Output" until a speed equal to or near to the required speed is found. On this line read across to the service factor column and check that the service factor exceeds the value from step (a). If the service factor is either lower or much higher than that required check the speeds at each side of the required speed to see if a more suitable unit and factor can be found.

(d) Overhung Loads
If the unit is to be fitted with an output shaft and an indirect drive attached to the shaft, calculate the overhung load value using the formula on page 276 and compare this value with the maximum allowable value given in column 5 of the selection tables.

If the value exceeds the maximum allowed, then either re-design the indirect drive or select a larger unit capable of supporting the overhung load.

(e) Shaft Mounted
If the unit is to be shaft mounted determine the relevant machine shaft size from the dimension tables on page 264. Torque bush dimensions can be found on page 279.

SELECTION EXAMPLE

A Series F shaft mounted gearbox is required to drive a non-uniformly loaded conveyor, which absorbs 2kW at 48 rpm and operates for up to 16 hours per day. The conveyor stops and starts on average 6 times a day. Specify the shaft diameter required to fit the unit selected, a torque bush is also required please specify the relevant product code.

(a) Service Factor
From table 1 a non-uniformly loaded conveyor is classed as a moderately loaded machine and when running for up to 16 hours per day has a service factor of 1.5. The machine stops and starts only 6 times a day therefore an additional stop/start factor is not required.

(b) Motor Power
The absorbed power is given as 2kW therefore use the next largest standard motor power above this which is 2.2kW. To determine the required torque use the absorbed power (kW) and the machine shaft speed in the formula given. Therefore the machine absorbed Torque

$$T = \frac{2 \times 9550}{48} = 398 \text{ Nm}$$

(c) Unit Selection
The nearest standard motor power above 2 kW is 2.2 kW therefore we go to the 2.2kW geared motor selections on page 255. Reading down the column headed nominal output it is found that there are 5 units listed at 48 rpm, at the first one of these read across to service factor column, it can be seen that the unit size 781A1445 has a service factor of 1.31, which does not exceed the 1.5 required service factor therefore read down the table to a factor that equals or exceeds this.

It can be seen that the 783A1445 is the first unit with a factor above 1.5, the last two digits of the product code (45) indicate that this unit is fitted with a 6 pole motor, it is usually more economical to select a 4 pole version if possible. Therefore the next unit down 783A1836 would be selected as this is the same size gearbox (783), and has a service factor of 1.58 exceeding the required value of 1.5. The output torque for this selection is 422Nm which exceeds the required 398Nm, therefore is suitable for the application.

(d) Overhung Loads
The gearbox is to be shaft mounted therefore no overhung loads present.

(e) Shaft Mounted
The unit is to be shaft mounted, referring to page 264 we see that the hub bore size is 40mm. From page 279 the torque bush to suit the size 783 unit selected has a product code of 881A9600.

TABLE 1 - MECHANICAL SERVICE FACTOR (Fm)

Types of Driven Machine	Operational Hours		
	Under 3	3 to 10	Over 10
Uniform Loads Agitators and Mixers – liquid or semi-liquid Blowers – centrifugal Bottling Machines Conveyors and Elevators – uniformly loaded Cookers Laundry Washing Machines – non-reversing Line Shafts Pumps – centrifugal and gear Wire Drawing Machines	0.80	1.00	1.25
Moderate Shock Loads Agitators and Mixers – variable density Conveyors – not uniformly loaded Cranes travel motion and hoisting Drawbench Feeders – pulsating load Hoists Kilns Laundry Tumblers Lifts Pumps – reciprocating with 3 or more cylinders Pump and Paper Making Machinery Rubber Mixers and Calendars Screens – rotary Textile Machinery	1.00	1.25	1.50
Heavy Shock Loads Brick Presses Briquetting Machines Conveyors – reciprocating and shaker Crushers Feeders – reciprocating Hammer Mills Pumps – reciprocating, 1 or 2 cylinders Rubber Masticators Screens – vibrating	1.50	1.75	2.00

TABLE 2 - STARTING FACTOR (Fs)

	Start/stops per hour					
	Up to 1	5	10	40	60	>200
Factor Fs	1.00	1.03	1.06	1.10	1.15	1.20

For high inertia applications, consult you local Authorised Distributor for verification of selection.

Series F Gearboxes : Motorised selection

Bold print indicates a 6 pole motor is used
Double reduction
Triple reduction

0.12 KW MOTOR

Nominal Output Rev/Min	Output Torque Nm	Service Factor	Unit Selection	Overhung Load N
237	4	15.20	780A0448	1393
176	6	11.90	780A0548	1553
154	7	9.40	**780A0413**	1630
154	7	10.90	780A0748	1630
136	8	10.10	780A0848	1706
114	10	8.10	**780A0513**	1820
107	10	8.90	780A1048	1862
100	11	7.60	**780A0713**	1909
99	11	8.30	780A1148	1916
89	12	7.10	**780A0813**	1992
78	14	7.10	780A1248	2090
69	16	6.00	**780A1013**	2185
69	15	6.90	780A1448	2185
64	17	5.80	**780A1113**	2246
60	18	6.00	780A1548	2300
54	20	5.60	780A1648	2390
51	22	5.10	**780A1213**	2440
49	22	5.30	780A1748	2476
45	25	4.70	**780A1413**	2554
45	24	5.00	780A1848	2554
39	29	4.30	**780A1513**	2691
38	28	4.60	780A1948	2717
35	32	4.10	**780A1613**	2800
32	35	3.70	**780A1713**	2893
32	34	3.80	780A2048	2893
29	38	3.40	**780A1813**	2999
27	40	3.20	780A2248	3078
25	44	2.90	**780A1913**	3166
25	44	2.90	780A2348	3166
21	53	2.40	**780A2013**	3374
20	53	2.40	780A2448	3434
18	61	2.10	780A2548	3569
18	62	2.10	**780A2213**	3569
16	69	1.90	**780A2313**	3719
16	73	1.40	780A2748	3753
15	70	1.80	780A3648	3860
15	73	3.40	781A2848	7100
15	73	3.40	782A2848	7100
14	78	1.70	780A3748	3860
13	83	1.60	**780A2413**	3860
13	85	1.50	780A3848	3860
12	95	1.20	**780A2513**	3860
11	101	1.30	780A3948	3860
11	99	3.00	**781A2713**	7100
11	99	3.00	**782A2713**	7100
10	108	1.00	**780A2713**	3860
10	109	1.20	**780A3613**	3860
10	112	2.30	**781A2813**	7100
10	112	2.30	**782A2813**	7100
10	110	3.70	781A4148	7100
10	110	3.70	782A4148	7100
9.1	119	3.50	**781A3713**	7100
9.1	119	3.50	**782A3713**	7100
9.0	121	1.20	**780A3713**	3860
8.9	128	1.10	780A4148	3860
8.3	131	3.20	**781A3813**	7100
8.3	131	3.20	**782A3813**	7100
8.2	133	1.10	**780A3813**	3860
8.2	132	3.20	781A4248	7100
8.2	132	3.20	782A4248	7100
7.7	150	0.90	780A4248	3860
7.5	144	3.00	**781A3913**	7100
7.5	144	3.00	**782A3913**	7100
7.1	153	2.80	781A4348	7100
7.1	153	2.80	782A4348	7100
7.0	156	0.90	**780A3913**	3860
6.9	166	0.90	780A4348	3860
6.4	169	2.50	**781A4113**	7100
6.4	169	2.50	**782A4113**	7100
6.4	170	2.60	781A4448	7100
6.4	170	2.60	782A4448	7100
5.4	203	2.10	**781A4213**	7100
5.4	203	2.10	**782A4213**	7100
5.3	205	2.20	781A4648	7100
5.3	205	2.20	782A4648	7100
5.3	205	3.20	783A4648	9200
5.2	210	3.70	**783A4213**	9200
4.6	235	1.80	781A4748	7100
4.6	235	1.80	782A4748	7100
4.6	236	1.90	**781A4313**	7100
4.6	236	1.90	**782A4313**	7100
4.5	241	3.90	**784A4313**	11300
4.4	245	3.10	**783A4313**	9200
4.1	268	1.60	781A4848	7100
4.1	268	1.60	782A4848	7100
4.1	262	1.70	**781A4413**	7100
4.1	262	1.70	**782A4413**	7100
4.1	264	3.20	784A4848	11300
4.0	271	3.50	**784A4413**	11300
3.9	278	2.70	**783A4413**	9200
3.5	316	3.10	**784A4613**	11300
3.4	316	1.40	**781A4613**	7100
3.4	316	1.40	**782A4613**	7100
3.4	316	2.20	**783A4613**	9200
3.0	362	1.20	**781A4713**	7100
3.0	362	1.20	**782A4713**	7100
3.0	358	2.70	**784A4713**	11300
2.7	407	2.20	**784A4813**	11300
2.6	410	1.00	**781A4813**	7100
2.6	410	1.00	**782A4813**	7100

0.18 KW MOTOR

Nominal Output Rev/Min	Output Torque Nm	Service Factor	Unit Selection	Overhung Load N
232	7	10.15	780A0402	1392
173	10	5.39	780A0502	1563
156	10	6.80	**780A0405**	1623
152	11	4.73	780A0702	1638
134	12	4.18	780A0802	1715
115	14	5.45	**780A0505**	1814
105	16	3.27	780A1002	1875
101	17	5.09	**780A0705**	1902
97	17	3.03	780A1102	1930
90	19	4.75	**780A0805**	1983
77	22	2.41	780A1202	2100
70	24	4.07	**780A1005**	2174
68	25	2.12	780A1402	2197
65	26	3.90	**780A1105**	2234
60	28	1.86	780A1502	2300
54	31	1.67	780A1602	2390
51	33	3.36	**780A1205**	2440
49	34	1.52	780A1702	2476
45	37	3.13	**780A1405**	2554
44	38	1.37	780A1802	2576
40	42	2.95	**780A1505**	2667
38	44	1.17	780A1902	2717
36	46	2.79	**780A1605**	2771
32	52	2.48	**780A1705**	2893
31	54	0.98	780A2002	2927
29	57	2.24	**780A1805**	2999
27	62	0.84	780A2202	3078
25	67	1.93	**780A1905**	3166
21	79	1.62	**780A2005**	3374
19	86	3.62	781A2502	7100
19	86	3.62	782A2502	7100
18	93	1.39	**780A2205**	3569
17	98	2.87	781A2702	7100
17	98	2.87	782A2702	7100
17	99	3.88	**781A2305**	7100
17	99	3.88	**782A2305**	7100
16	104	1.24	**780A2305**	3719
15	108	1.19	780A3602	3860
15	111	2.26	781A2802	7100
15	111	2.26	782A2802	7100
14	118	1.09	780A3702	3860
14	117	3.10	781A3702	7100
14	117	3.10	782A3702	7100
13	130	1.00	780A3802	3860
13	130	2.51	**781A2505**	7100
13	130	2.51	**782A2505**	7100
13	130	2.78	**783A2505**	9200
13	130	2.91	781A3802	7100
13	130	2.91	782A3802	7100
12	143	0.90	**780A2505**	3860
11	153	0.87	780A3902	3860
11	147	2.00	**781A2705**	7100
11	147	2.00	**782A2705**	7100
11	143	2.78	781A3902	7100
11	143	2.78	782A3902	7100
10	163	0.80	**780A2705**	3860
10	167	1.57	**781A2805**	7100
10	167	1.57	**782A2805**	7100
10	167	2.46	781A4102	7100
10	167	2.46	782A4102	7100
9.2	177	2.35	**781A3705**	7100
9.2	177	2.35	**782A3705**	7100
9.2	178	3.58	**783A3705**	9200
8.8	185	3.51	783A4102	9200
8.5	193	3.41	**783A3805**	9200
8.4	195	2.17	**781A3805**	7100
8.4	195	2.17	**782A3805**	7100
8.2	199	3.90	**784A3805**	11300
8.2	199	3.93	784A4202	11300
8.1	200	2.11	781A4202	7100
8.1	200	2.11	782A4202	7100
7.8	208	3.27	783A4202	9200
7.6	214	2.00	**781A3905**	7100
7.6	214	2.00	**782A3905**	7100
7.2	229	3.58	**784A3905**	11300
7.1	232	3.07	**783A3905**	9200
7.0	234	1.86	781A4302	7100
7.0	234	1.86	782A4302	7100
6.9	238	3.51	784A4302	11300
6.7	242	3.00	783A4302	9200
6.6	249	3.41	**784A4105**	11300
6.5	251	1.71	**781A4105**	7100
6.5	251	1.71	**782A4105**	7100
6.3	259	1.70	781A4402	7100
6.3	259	1.70	782A4402	7100
6.1	268	3.27	784A4402	11300
5.9	275	2.65	783A4402	9200
5.9	278	2.74	**783A4105**	9200
5.5	299	3.06	**784A4205**	11300
5.4	301	1.44	**781A4205**	7100
5.4	301	1.44	**782A4205**	7100
5.2	313	1.41	781A4602	7100
5.2	313	1.41	782A4602	7100
5.2	312	2.08	783A4602	9200
5.2	312	2.47	**783A4205**	9200
5.2	312	2.95	784A4602	11300
4.7	350	1.26	**781A4305**	7100
4.7	350	1.26	**782A4305**	7100
4.6	358	2.64	**784A4305**	11300
4.6	354	2.65	784A4702	11300
4.5	358	1.21	781A4702	7100
4.5	358	1.21	782A4702	7100
4.5	364	2.11	**783A4305**	9200
4.2	388	1.13	**781A4405**	7100
4.2	388	1.13	**782A4405**	7100
4.1	402	2.08	784A4802	11300
4.1	403	2.39	**784A4405**	11300
4.0	408	1.04	781A4802	7100
4.0	408	1.04	782A4802	7100
4.0	413	1.84	**783A4405**	9200
3.5	469	0.94	**781A4605**	7100
3.5	469	0.94	**782A4605**	7100
3.5	468	1.45	**783A4605**	9200
3.5	469	2.10	**784A4605**	11300
3.1	532	1.84	**784A4705**	11300
3.0	537	0.80	**781A4705**	7100
3.0	537	0.80	**782A4705**	7100
2.7	604	1.45	**784A4805**	11300

Series F Gearboxes : Motorised selection

0.25 KW MOTOR

Nominal Output Rev/Min	Output Torque Nm	Service Factor	Unit Selection	Overhung Load N
232	10	6.10	780A0406	1404
172	13	5.30	780A0506	1566
156	15	3.48	**780A0407**	1623
151	15	4.96	780A0706	1642
133	17	4.63	780A0806	1720
115	20	3.92	**780A0507**	1814
104	22	4.00	780A1006	1882
101	23	3.66	**780A0707**	1902
97	24	3.83	780A1106	1930
90	26	3.42	**780A0807**	1983
77	30	3.30	780A1206	2100
70	33	2.93	**780A1007**	2174
68	34	3.02	780A1406	2197
65	36	2.81	**780A1107**	2234
59	39	2.75	780A1506	2314
53	44	2.56	780A1606	2406
51	45	2.42	**780A1207**	2440
48	48	2.43	780A1706	2495
45	51	2.25	**780A1407**	2554
44	53	2.30	780A1806	2576
40	58	2.12	**780A1507**	2667
37	63	2.06	780A1906	2744
36	64	2.01	**780A1607**	2771
32	72	1.78	**780A1707**	2893
31	75	1.73	780A2006	2927
29	80	1.62	**780A1807**	2999
27	86	1.50	780A2206	3078
25	94	1.37	780A2306	3184
25	93	1.39	**780A1907**	3166
24	95	3.87	**781A2007**	7200
24	95	3.87	**782A2007**	7200
22	104	3.48	781A2406	7100
22	104	3.48	782A2406	7100
21	110	1.17	**780A2007**	3374
20	113	1.14	780A2406	3408
20	115	3.39	**781A2207**	7200
20	115	3.39	**782A2207**	7200
19	121	2.59	781A2506	7100
19	121	2.59	782A2506	7100
19	121	2.99	783A2506	9200
18	130	0.99	780A2506	3582
18	129	1.00	**780A2207**	3569
17	137	2.05	781A2706	7100
17	137	2.05	782A2706	7100
17	138	2.79	**781A2307**	7200
17	138	2.79	**782A2307**	7200
16	148	0.87	780A2706	3753
16	144	0.90	**780A2307**	3719
16	144	3.59	783A3606	9200
15	156	1.61	781A2806	7100
15	156	1.61	782A2806	7100
15	155	2.43	**781A2407**	7200
15	155	2.43	**782A2407**	7200
15	157	2.99	784A2806	11300
14	164	2.22	781A3706	7100
14	164	2.22	782A3706	7100
14	162	3.08	**783A2407**	9200
14	166	3.29	783A3706	9200
13	173	0.74	**780A2407**	3980
13	181	1.81	**781A2507**	7200
13	181	1.81	**782A2507**	7200
13	181	2.00	**783A2507**	9200
13	180	3.13	783A3806	9200
12	199	0.65	**780A2507**	4184
12	182	2.08	781A3806	7100
12	182	2.08	782A3806	7100
12	195	3.15	**783A3507**	9200
12	186	3.59	784A3806	11300
11	205	1.44	**781A2707**	7200
11	205	1.44	**782A2707**	7200
11	200	1.98	781A3906	7100
11	200	1.98	782A3906	7100
11	215	2.81	**783A3607**	9200
11	216	2.81	783A3906	9200
11	209	3.08	**784A2707**	11300
11	213	3.29	784A3906	11300
10	226	0.80	**780A2707**	4384
10	232	1.13	**781A2807**	7200
10	232	1.13	**782A2807**	7200
10	235	1.76	781A4106	7100
10	235	1.76	782A4106	7100
10	233	2.00	**784A2807**	11300
10	232	3.13	784A4106	11300
9.2	246	1.69	**781A3707**	7200
9.2	246	1.69	**782A3707**	7200
9.2	247	2.58	**783A3707**	9200
9.1	251	3.15	**784A3707**	11300
8.8	259	2.51	783A4106	9200
8.5	269	2.45	**783A3807**	9200
8.4	271	1.56	**781A3807**	7200
8.4	271	1.56	**782A3807**	7200
8.2	278	2.81	784A4206	11300
8.1	281	1.51	781A4206	7100
8.1	281	1.51	782A4206	7100
7.8	292	2.34	783A4206	9200
7.6	298	1.44	**781A3907**	7200
7.6	298	1.44	**782A3907**	7200
7.2	319	2.58	**784A3907**	11300
7.1	322	2.21	**783A3907**	9200
6.9	327	1.33	781A4306	7100
6.9	327	1.33	782A4306	7100
6.8	334	2.51	784A4306	11300
6.7	339	2.14	783A4306	9200
6.6	346	2.45	**784A4107**	11300
6.5	349	1.23	**781A4107**	7200
6.5	349	1.23	**782A4107**	7200
6.2	363	1.21	781A4406	7100
6.2	363	1.21	782A4406	7100
6.0	375	2.34	784A4406	11300
5.9	385	1.90	783A4406	9200
5.9	386	1.97	**783A4107**	9200
5.5	416	2.20	**784A4207**	11300
5.4	418	1.04	**781A4207**	7200
5.4	418	1.04	**782A4207**	7200
5.2	438	1.01	781A4606	7100
5.2	438	1.01	782A4606	7100
5.2	437	1.49	783A4606	9200
5.2	434	1.77	**783A4207**	9200
5.2	437	2.11	784A4606	11300
4.7	487	0.90	**781A4307**	7200
4.7	487	0.90	**782A4307**	7200
4.6	495	1.90	784A4706	11300
4.5	501	0.86	781A4706	7100
4.5	501	0.86	782A4706	7100
4.5	506	1.52	**783A4307**	9200
4.2	540	0.82	**781A4407**	7200
4.2	540	0.82	**782A4407**	7200
4.1	560	1.72	**784A4407**	11300
4.0	574	1.33	**783A4407**	9200
4.0	563	1.49	784A4806	11300
3.5	651	1.04	**783A4607**	9200
3.5	652	1.51	**784A4607**	11300
3.1	739	1.33	**784A4707**	11300
2.7	839	1.04	**784A4807**	11300

0.37 KW MOTOR

Nominal Output Rev/Min	Output Torque Nm	Service Factor	Unit Selection	Overhung Load N
241	14	3.65	780A0408	2080
178	19	2.70	780A0508	2258
157	22	3.49	780A0708	2327
157	22	5.81	**780A0412**	1619
138	25	3.25	780A0808	2403
116	30	4.30	**780A0512**	1808
108	32	2.81	780A1008	2554
102	34	3.78	**780A0712**	1895
100	34	2.67	780A1108	2594
90	38	3.34	**780A0812**	1983
79	43	2.29	780A1208	2730
70	49	2.10	780A1408	2793
70	49	2.61	**780A1012**	2174
65	53	2.42	**780A1112**	2234
61	56	1.92	780A1508	2865
55	62	1.80	780A1608	2914
51	67	1.92	**780A1212**	2440
48	71	1.64	780A1708	2495
45	76	1.52	**780A1412**	2554
44	78	1.55	780A1808	2576
40	86	1.44	**780A1512**	2667
37	93	1.39	780A1908	2744
36	95	1.35	**780A1612**	2771
33	102	3.65	**781A1712**	6550
33	102	3.65	**782A1712**	6550
32	107	1.20	**780A1712**	2893
31	111	1.17	780A2008	2927
31	110	3.55	781A2208	6690
31	110	3.55	782A2208	6690
30	113	3.31	**781A1812**	6700
30	113	3.31	**782A1812**	6700
29	118	1.09	**780A1812**	2999
27	127	1.02	780A2208	3078
26	132	2.91	781A2308	6981
26	132	2.91	782A2308	6981
26	130	3.02	**781A1912**	6923
26	130	3.02	**782A1912**	6923
25	137	0.82	**780A1912**	3166
25	139	0.93	780A2308	3184
24	141	2.63	**781A2012**	7053
24	141	2.63	**782A2012**	7053
24	139	3.89	783A2308	9200
23	149	2.44	781A2408	7100
23	149	2.44	782A2408	7100
22	155	3.10	783A2408	9200
20	173	1.81	781A2508	7100
20	173	1.81	782A2508	7100
20	170	2.30	**781A2212**	7100
20	170	2.30	**782A2212**	7100
19	174	2.09	783A2508	9200
19	179	3.89	784A2508	11300
18	187	2.83	783A3508	9200
17	196	1.44	781A2708	7100
17	196	1.44	782A2708	7100
17	203	1.90	**781A2312**	7100
17	203	1.90	**782A2312**	7100
17	199	3.10	784A2708	11300
16	215	2.63	**783A2312**	9200
16	206	2.51	783A3608	9200
15	222	1.13	781A2808	7100
15	222	1.13	782A2808	7100
15	228	1.65	**781A2412**	7100
15	228	1.65	**782A2412**	7100
15	224	2.09	784A2808	11300
15	225	3.96	**784A2412**	11300
14	235	1.55	781A3708	7100
14	235	1.55	782A3708	7100
14	239	2.09	**783A2412**	9200
14	237	2.31	783A3708	9200
14	240	2.83	784A3708	11300
13	266	1.23	**781A2512**	7100
13	266	1.23	**782A2512**	7100
13	267	1.36	**783A2512**	9200
13	260	1.46	781A3808	7100
13	260	1.46	782A3808	7100
13	257	2.19	783A3808	9200
13	265	2.51	784A3808	11300
12	286	1.39	781A3908	7100
12	286	1.39	782A3908	7100
12	287	2.14	**783A3512**	9200
12	277	2.63	**784A2512**	11300
11	302	0.98	**781A2712**	7100
11	302	0.98	**782A2712**	7100
11	317	1.91	**783A3612**	9200
11	309	1.97	783A3908	9200
11	308	2.09	**784A2712**	11300
11	305	2.31	784A3908	11300
10	335	1.23	781A4108	7100
10	335	1.23	782A4108	7100
10	344	1.36	**784A2812**	11300
10	332	2.19	784A4108	11300
10	328	3.93	**785A2712**	17000

Series F Gearboxes : Motorised selection

Bold print indicates a 6 pole motor is used
Double reduction
Triple reduction

Nominal Output Rev/Min	Output Torque Nm	Service Factor	Unit Selection	Overhung Load N
9.3	362	1.15	**781A3712**	7100
9.3	362	1.15	**782A3712**	7100
9.3	364	1.75	**783A3712**	9200
9.3	364	3.02	**785A2812**	17000
9.1	370	1.75	783A4108	9200
9.1	370	2.14	**784A3712**	11300
8.5	396	1.67	**783A3812**	9200
8.5	398	1.97	784A4208	11300
8.5	397	3.59	785A3708	17000
8.4	399	1.06	**781A3812**	7100
8.4	399	1.06	**782A3812**	7100
8.4	401	1.06	781A4208	7100
8.4	401	1.06	782A4208	7100
8.3	408	1.91	**784A3812**	11300
8.1	416	1.64	783A4208	9200
8.0	423	3.26	785A3808	17000
7.7	439	0.98	**781A3912**	7100
7.7	439	0.98	**782A3912**	7100
7.2	467	0.93	781A4308	7100
7.2	467	0.93	782A4308	7100
7.2	469	1.75	**784A3912**	11300
7.1	474	1.50	**783A3912**	9200
7.1	476	1.75	784A4308	11300
6.9	485	1.50	783A4308	9200
6.7	499	2.94	785A3908	17000
6.6	510	1.67	**784A4112**	11300
6.5	513	0.84	**781A4112**	7100
6.5	513	0.84	**782A4112**	7100
6.5	519	0.85	781A4408	7100
6.5	519	0.85	782A4408	7100
6.3	536	1.64	784A4408	11300
6.3	531	2.84	785A4108	17000
6.1	550	1.33	783A4408	9200
5.9	568	1.34	**783A4112**	9200
5.5	612	1.50	**784A4212**	11300
5.4	624	1.04	783A4608	9200
5.4	624	1.48	784A4608	11300
5.2	639	1.21	**783A4212**	9200
5.1	662	2.49	785A4208	17000
4.8	708	1.33	784A4708	11300
4.6	732	1.29	**784A4312**	11300
4.5	745	1.03	**783A4312**	9200
4.3	783	2.26	785A4308	17000
4.2	804	1.04	784A4808	11300
4.1	824	1.17	**784A4412**	11300
4.0	845	0.90	**783A4412**	9200
3.9	854	2.14	785A4408	17000
3.5	960	1.03	**784A4612**	11300
3.2	1048	1.90	785A4608	17000
3.1	1088	0.90	**784A4712**	11300
2.9	1167	1.80	785A4708	17000
2.6	1306	1.36	785A4808	17000

0.55 KW MOTOR

Nominal Output Rev/Min	Output Torque Nm	Service Factor	Unit Selection	Overhung Load N
235	22	2.81	780A0416	1397
174	29	2.44	780A0516	1559
157	32	2.10	**780A0417**	1619
153	33	2.29	780A0716	1634
135	38	2.14	780A0816	1711
116	44	1.80	**780A0517**	1808
106	48	1.85	780A1016	1868
102	50	1.68	**780A0717**	1895
98	52	1.76	780A1116	1923
90	57	1.55	**780A0817**	1983
79	64	1.54	780A1216	2080
70	73	1.33	**780A1017**	2174
70	73	1.42	780A1416	2174
65	78	1.28	**780A1117**	2234
61	84	1.29	780A1516	2286

Nominal Output Rev/Min	Output Torque Nm	Service Factor	Unit Selection	Overhung Load N
55	93	1.21	780A1616	2374
51	100	1.10	**780A1217**	2440
50	101	3.68	781A1716	5614
50	101	3.68	782A1716	5614
48	106	1.10	780A1716	2495
48	107	3.54	**781A1417**	5673
48	107	3.54	**782A1417**	5673
45	113	1.02	**780A1417**	2554
45	112	3.33	781A1816	5738
45	112	3.33	782A1816	5738
44	116	1.04	780A1816	2576
43	118	3.21	**781A1517**	5810
43	118	3.21	**782A1517**	5810
40	127	0.97	**780A1517**	2667
39	128	3.03	781A1916	5912
39	128	3.03	782A1916	5912
38	135	2.86	**781A1617**	5968
38	135	2.86	**782A1617**	5968
37	138	0.94	780A1916	2744
36	142	0.91	**780A1617**	2771
36	140	2.65	781A2016	6014
36	140	2.65	782A2016	6014
33	152	2.45	**781A1717**	6126
33	152	2.45	**782A1717**	6126
32	159	0.81	**780A1717**	2893
30	168	2.22	**781A1817**	6233
30	167	2.34	781A2216	6229
30	168	2.22	**782A1817**	6233
30	167	2.34	782A2216	6229
29	176	0.73	**780A1817**	2999
26	193	2.03	**781A1917**	6388
26	193	2.03	**782A1917**	6388
25	201	1.92	781A2316	6428
25	201	1.92	782A2316	6428
25	202	3.50	**783A1917**	8770
24	209	1.77	**781A2017**	6472
24	209	1.77	**782A2017**	6472
24	211	2.56	783A2316	8858
22	226	1.60	781A2416	6552
22	226	1.60	782A2416	6552
21	235	2.04	783A2416	9053
21	239	3.00	**783A2017**	9060
20	252	1.55	**781A2217**	6636
20	252	1.55	**782A2217**	6636
20	261	3.42	**784A2217**	11300
19	262	1.19	781A2516	6673
19	262	1.19	782A2516	6673
19	264	1.38	783A2516	9200
19	261	2.75	**783A2217**	9200
19	272	2.56	784A2516	11300
18	284	1.86	783A3516	9200
17	303	1.28	**781A2317**	6766
17	299	0.95	781A2716	6765
17	303	1.28	**782A2317**	6766
17	299	0.95	782A2716	6765
17	307	2.91	**784A2317**	11300
17	303	2.04	784A2716	11300
16	319	1.77	**783A2317**	9200
16	313	1.66	783A3616	9200
16	326	3.89	785A2716	17000
15	340	1.11	**781A2417**	6823
15	340	1.11	**782A2417**	6823
15	335	2.66	**784A2417**	11300
15	340	1.38	784A2716	11300
14	357	1.02	781A3716	6874
14	357	1.02	782A3716	6874
14	355	1.41	**783A2417**	9200
14	360	1.52	783A3716	9200
14	365	1.86	784A3716	11300
14	360	3.05	785A2816	17000
13	396	0.83	**781A2517**	6850
13	396	0.83	**782A2517**	6850
13	397	0.92	**783A2517**	9200
13	395	0.96	781A3816	6890
13	395	0.96	782A3816	6890
13	391	1.44	783A3816	9200
13	390	3.17	785A3716	17000
12	434	0.92	781A3916	6890
12	434	0.92	782A3916	6890

Nominal Output Rev/Min	Output Torque Nm	Service Factor	Unit Selection	Overhung Load N
12	427	1.44	**783A3517**	9200
12	412	1.77	**784A2517**	11300
12	403	1.66	784A3816	11300
12	426	3.87	**785A2517**	17000
12	418	2.84	785A3816	17000
11	471	1.28	**783A3617**	9200
11	469	1.30	783A3916	9200
11	457	1.41	**784A2717**	11300
11	463	1.52	784A3916	11300
10	509	0.81	781A4116	6540
10	509	0.81	782A4116	6540
10	511	0.92	**784A2817**	11300
10	504	1.44	784A4116	11300
10	487	2.65	**785A2717**	17000
10	495	2.56	785A3916	17000
9.5	528	2.46	785A4116	17000
9.3	541	1.18	**783A3717**	9200
9.3	541	2.03	**785A2817**	17000
9.1	551	1.44	**784A3717**	11300
8.9	562	1.16	783A4116	9200
8.5	588	1.12	**783A3817**	9200
8.5	591	2.42	**785A3717**	17000
8.3	607	1.28	**784A3817**	11300
8.3	604	1.30	784A4216	11300
8.0	630	2.19	**785A3817**	17000
7.9	633	1.08	783A4216	9200
7.7	657	2.16	785A4216	17000
7.2	698	1.18	**784A3917**	11300
7.1	705	1.01	**783A3917**	9200
6.9	724	1.16	784A4316	11300
6.8	736	0.99	783A4316	9200
6.7	742	1.98	**785A3917**	17000
6.6	759	1.12	**784A4117**	11300
6.5	773	1.95	785A4316	17000
6.3	790	1.91	**785A4117**	17000
6.1	815	1.08	784A4416	11300
6.0	835	0.87	783A4416	9200
5.9	845	0.90	**783A4117**	9200
5.9	849	1.85	785A4416	17000
5.8	867	3.91	**786A4117**	19700
5.5	910	1.01	**784A4217**	11300
5.3	949	0.97	784A4616	11300
5.1	985	1.67	**785A4217**	17000
4.8	1035	1.64	785A4616	17000
4.8	1045	3.24	**786A4217**	19700
4.6	1088	0.87	**784A4317**	11300
4.6	1075	0.87	784A4716	11300
4.5	1128	3.82	**787A4317**	29900
4.3	1165	1.52	**785A4317**	17000
4.3	1153	1.57	785A4716	17000
4.1	1226	2.84	**786A4317**	19700
4.0	1242	3.47	**787A4417**	29900
3.9	1270	1.44	**785A4417**	17000
3.9	1292	1.38	785A4816	17000
3.8	1329	3.19	**787A4517**	29900
3.7	1343	2.63	**786A4417**	19700
3.4	1484	2.86	**787A4617**	29900
3.2	1558	1.28	**785A4617**	17000
3.0	1643	2.19	**786A4617**	19700
2.9	1734	1.21	**785A4717**	17000
2.9	1708	2.52	**787A4717**	29868
2.8	1802	2.00	**786A4717**	19700
2.7	1855	3.91	**788A4817**	43000
2.6	1942	0.92	**785A4817**	17000
2.6	1922	2.24	**787A4817**	29852
2.4	2065	1.74	**786A4817**	19700

Series F Gearboxes : Motorised selection

0.75 KW MOTOR

Nominal Output Rev/Min	Output Torque Nm	Service Factor	Unit Selection	Overhung Load N
239	29	2.09	780A0418	1389
177	39	1.82	780A0518	1550
158	44	1.55	**780A0423**	1615
155	45	1.70	780A0718	1626
137	51	1.59	780A0818	1701
117	59	1.33	**780A0523**	1802
107	65	1.37	780A1018	1862
102	68	1.23	**780A0723**	1895
98	71	1.29	780A1118	1923
90	77	1.14	**780A0823**	1983
79	88	1.13	780A1218	2080
72	95	3.72	782A1418	4921
72	95	3.72	781A1418	4921
70	99	0.98	**780A1023**	2174
70	99	1.04	780A1418	2174
67	104	3.23	**782A1123**	5010
67	104	3.23	**781A1123**	5010
65	107	0.94	**780A1123**	2234
65	106	3.41	782A1518	5037
65	106	3.41	781A1518	5037
61	114	0.95	780A1518	2286
59	118	2.98	**782A1223**	5139
59	118	2.98	**781A1223**	5139
57	120	3.06	782A1618	5165
57	120	3.06	781A1618	5165
55	126	0.89	780A1618	2374
51	136	0.81	**780A1223**	2440
51	137	2.74	782A1718	5302
51	137	2.74	781A1718	5302
48	145	0.81	780A1718	2495
48	145	2.61	**782A1423**	5344
48	145	2.61	**781A1423**	5344
46	151	2.48	782A1818	5394
46	151	2.48	781A1818	5394
43	160	2.36	**782A1523**	5445
43	160	2.36	**781A1523**	5445
40	173	2.26	782A1918	5518
40	173	2.26	781A1918	5518
40	175	3.90	**783A1623**	7530
38	183	2.11	**782A1623**	5555
38	183	2.11	**781A1623**	5555
38	181	3.79	783A1918	7590
37	188	1.97	782A2018	5586
37	188	1.97	781A2018	5586
33	207	1.81	**782A1723**	5655
33	207	1.81	**781A1723**	5655
33	208	3.35	**783A1723**	7790
32	213	3.29	783A2018	7840
31	225	1.74	782A2218	5718
31	225	1.74	781A2218	5718
31	221	3.15	**783A1823**	7880
31	225	3.95	**784A1823**	11200
30	227	1.64	**782A1823**	5715
30	227	1.64	**781A1823**	5715
30	233	3.05	783A2218	7969
30	233	3.82	784A2218	11300
26	271	1.43	782A2318	5814
26	271	1.43	781A2318	5814
26	262	1.50	**782A1923**	5794
26	262	1.50	**781A1923**	5794
26	267	3.32	**784A1923**	11700
25	274	2.58	**783A1923**	8171
25	275	3.24	784A2318	11800
24	284	1.30	**782A2023**	5828
24	284	1.30	**781A2023**	5828
24	284	1.91	783A2318	8233
24	285	3.11	**784A2023**	11900
23	304	1.19	782A2418	5860
23	304	1.19	781A2418	5860
23	300	2.97	784A2418	12050
22	316	1.52	783A2418	8358
21	324	2.21	**783A2023**	8354
20	342	1.14	**782A2223**	5860
20	342	1.14	**781A2223**	5860
20	355	2.03	**783A2223**	8443
20	354	2.52	**784A2223**	12449
19	353	0.89	782A2518	5870
19	353	0.89	781A2518	5870
19	355	1.02	783A2518	8464
19	366	1.91	784A2518	12603
18	382	1.39	783A3518	8558
17	410	0.94	**782A2323**	5840
17	410	0.94	**781A2323**	5840
17	408	1.52	784A2718	12889
17	416	2.14	**784A2323**	12947
16	421	1.23	783A3618	8611
16	433	1.30	**783A2323**	8581
15	461	0.82	**782A2423**	5780
15	461	0.82	**781A2423**	5780
15	457	1.02	784A2718	13214
15	454	1.96	**784A2423**	13154
14	482	1.04	**783A2423**	8640
14	484	1.13	783A3718	8670
14	491	1.39	784A3718	13433
14	481	3.76	**785A2423**	17000
13	526	1.07	783A3818	8700
13	542	1.23	784A3818	13682
13	525	2.36	785A3718	17000
12	580	1.06	**783A3523**	8680
12	558	1.30	**784A2523**	13713
12	563	2.11	785A3818	17000
12	578	2.85	**785A2523**	17000
11	639	0.95	**783A3623**	8630
11	631	0.96	783A3918	9200
11	621	1.04	**784A2723**	13900
11	623	1.13	784A3918	14000
10	678	1.07	784A4118	14000
10	666	1.91	785A3918	17000
10	661	1.95	**785A2723**	17000
9.7	711	1.83	785A4118	17000
9.4	734	1.50	**785A2823**	17000
9.3	735	0.87	**783A3723**	8510
9.2	747	1.06	**784A3723**	14000
9.0	756	0.86	783A4118	9200
8.8	782	3.73	**786A2823**	19700
8.6	798	0.83	**783A3823**	8400
8.6	802	1.78	**785A3723**	17000
8.4	812	0.96	784A4218	14000
8.3	823	0.95	**784A3823**	14000
8.0	851	0.80	783A4218	9200
8.0	854	1.61	**785A3823**	17000
7.8	883	1.61	785A4218	17000
7.4	920	3.68	**786A3823**	19700
7.3	937	3.62	786A4218	19700
7.2	947	0.87	**784A3923**	14000
7.0	973	0.86	784A4318	14000
6.8	1007	1.46	**785A3923**	17000
6.7	1029	0.83	**784A4123**	14000
6.6	1039	1.45	785A4318	17000
6.6	1041	3.25	**786A3923**	19700
6.4	1072	1.41	**785A4123**	17000
6.3	1089	3.11	786A4318	19700
6.3	1083	3.98	**787A4023**	29900
6.2	1095	0.80	784A4418	14000
6.1	1111	3.88	787A4418	29900
6.0	1142	1.37	785A4418	17000
5.8	1176	2.88	**786A4123**	19700
5.8	1184	3.58	787A4518	29900
5.8	1185	3.58	**787A4123**	29900
5.7	1199	2.83	786A4418	19700
5.2	1313	3.23	**787A4223**	29900
5.1	1336	1.23	**785A4223**	17000
5.1	1329	3.19	787A4618	29900
4.9	1391	1.22	785A4618	17000
4.8	1418	2.39	**786A4223**	19700
4.6	1473	2.32	786A4618	19700
4.5	1530	2.82	**787A4323**	29877
4.5	1524	2.83	787A4718	29875
4.4	1551	1.17	785A4718	17000
4.3	1580	1.12	**785A4323**	17000
4.3	1607	2.15	786A4718	19700
4.1	1663	2.09	**786A4323**	19700
4.1	1685	2.56	**787A4423**	29865
4.0	1723	1.06	**785A4423**	17000
4.0	1713	2.52	787A4818	29867
3.9	1737	1.02	785A4818	17000
3.8	1821	1.94	**786A4423**	19700
3.8	1803	2.35	**787A4523**	29865
3.7	1844	1.92	786A4818	19700
3.6	1910	3.35	**788A4523**	43000
3.4	2013	2.11	**787A4623**	29878
3.3	2050	3.12	**788A4623**	43000
3.2	2113	0.94	**785A4623**	17000
3.1	2229	1.61	**786A4623**	19700
2.9	2352	0.89	**785A4723**	17000
2.9	2317	1.86	**787A4723**	29832
2.8	2444	1.47	**786A4723**	19700
2.8	2400	3.02	**788A4723**	43000
2.6	2606	1.65	**787A4823**	29799
2.6	2572	2.82	**788A4823**	43000
2.4	2801	1.29	**786A4823**	19700

1.1 KW MOTOR

Nominal Output Rev/Min	Output Torque Nm	Service Factor	Unit Selection	Overhung Load N
239	43	1.43	780A0424	1389
177	58	1.24	780A0524	1550
158	64	1.05	**780A0427**	1796
155	66	1.16	780A0724	1626
137	74	1.08	780A0824	1701
117	87	0.91	**780A0527**	1802
107	95	0.94	780A1024	1862
106	96	3.31	**781A0727**	4228
106	96	3.31	**782A0727**	4228
102	100	0.84	**780A0727**	1895
101	100	3.34	781A1124	4279
101	100	3.34	782A1124	4279
98	104	0.88	780A1124	1923
96	106	3.08	**781A0827**	4313
96	106	3.08	**782A0827**	4313
89	114	3.01	781A1224	4382
89	114	3.01	782A1224	4382
85	120	2.73	**781A1027**	4417
85	120	2.73	**782A1027**	4417
72	140	2.54	781A1424	4539
72	140	2.54	782A1424	4539
67	153	2.20	**781A1127**	4596
67	153	2.20	**782A1127**	4596
65	155	2.32	781A1524	4613
65	155	2.32	782A1524	4613
63	161	3.97	**783A1127**	6350
60	169	3.80	783A1624	6420
59	174	2.03	**781A1227**	4668
59	174	2.03	**782A1227**	4668
57	177	2.09	781A1624	4685
57	177	2.09	782A1624	4685
55	185	3.10	**783A1227**	6520
51	201	1.87	781A1724	4758
51	201	1.87	782A1724	4758
51	200	3.29	783A1724	6624
48	213	1.78	**781A1427**	4769
48	213	1.78	**782A1427**	4769
47	215	3.01	**783A1427**	6687
47	214	3.11	783A1824	6690
46	221	1.69	781A1824	4792
46	221	1.69	782A1824	4792
43	235	1.61	**781A1527**	4805
43	235	1.61	**782A1527**	4805
43	239	3.10	**784A1527**	9820
42	240	2.81	**783A1527**	6802
40	254	1.54	781A1924	4828
40	254	1.54	782A1924	4828
40	256	2.66	**783A1627**	6859
39	258	3.43	784A1924	10000
38	268	1.44	**781A1627**	4832
38	268	1.44	**782A1627**	4832
38	266	2.58	783A1924	6896
37	276	1.34	781A2024	4836
37	276	1.34	782A2024	4836
37	277	3.01	**784A1627**	10200
37	275	3.23	784A2024	10178
33	304	1.23	**781A1727**	4830

Series F Gearboxes : Motorised selection

Bold print indicates a 6 pole motor is used
Double reduction
Triple reduction

Nominal Output Rev/Min	Output Torque Nm	Service Factor	Unit Selection	Overhung Load N
33	304	1.23	**782A1727**	4830
33	305	2.28	**783A1727**	6996
33	310	2.84	**784A1727**	10400
32	313	2.25	783A2024	7023
31	330	1.18	781A2224	4823
31	330	1.18	782A2224	4823
31	325	2.15	**783A1827**	7034
31	330	2.69	**784A1827**	10580
30	334	1.12	**781A1827**	4808
30	334	1.12	**782A1827**	4808
30	342	2.08	783A2224	7075
30	342	2.61	784A2224	10659
26	397	0.97	781A2324	4740
26	397	0.97	782A2324	4740
26	384	1.02	**781A1927**	4754
26	384	1.02	**782A1927**	4754
26	391	2.26	**784A1927**	10964
25	402	1.76	**783A1927**	7123
25	403	2.21	784A2324	11040
24	417	0.89	**781A2027**	4700
24	417	0.89	**782A2027**	4700
24	417	1.30	783A2324	7141
24	419	2.12	**784A2027**	11112
24	426	3.85	785A2324	15300
23	446	0.81	781A2424	4650
23	446	0.81	782A2424	4650
23	440	2.02	784A2424	11221
22	464	1.03	783A2424	7141
22	467	3.55	785A2424	15588
22	468	3.61	**785A2027**	15600
21	475	1.51	**783A2027**	7120
20	520	1.38	**783A2227**	7093
20	519	1.72	**784A2227**	11485
19	537	1.30	784A2524	11593
19	541	3.20	**785A2227**	16100
18	560	0.95	783A3524	7200
18	556	2.86	785A2524	16227
17	598	1.03	784A2724	11774
17	610	1.46	**784A2327**	11805
16	617	0.84	783A3624	7220
16	636	0.89	**783A2327**	6938
16	644	1.97	785A2724	16797
16	645	2.77	**785A2327**	16787
15	667	1.34	**784A2427**	11915
14	721	0.95	784A3724	12100
14	711	1.55	785A2824	17000
14	706	2.56	**785A2427**	17000
13	795	0.84	784A3824	12200
13	770	1.61	785A3724	17000
13	755	3.56	786A2824	19700
12	819	0.89	**784A2527**	12177
12	825	1.44	785A3824	17000
12	847	1.95	**785A2527**	17000
11	918	3.36	**786A2527**	19000
11	889	3.81	786A3824	19700
10	977	1.30	785A3924	17000
10	970	1.33	**785A2727**	17000
10	1000	3.12	**786A2727**	19000
10	1006	3.37	786A3924	19700
9.8	1042	1.25	785A4124	17000
9.4	1076	1.02	**785A2827**	17000
9.1	1111	3.81	**787A3727**	29900
8.8	1147	2.55	**786A2827**	19000
8.8	1134	2.99	786A4124	19700
8.8	1144	3.70	787A4124	29900
8.6	1176	1.22	**785A3727**	17000
8.2	1234	3.43	**787A3827**	29900
8.1	1233	2.75	**786A3727**	19000
8.0	1253	1.10	**785A3827**	17000
7.9	1265	3.35	787A4224	29890
7.8	1295	1.10	785A4224	17000
7.4	1350	2.51	**786A3827**	19000
7.3	1374	2.47	786A4224	19700
7.0	1430	3.01	**787A3927**	29900
6.8	1477	1.00	**785A3927**	17000
6.8	1472	2.93	787A4324	29885
6.6	1525	0.99	785A4324	17000
6.6	1527	2.22	**786A3927**	19000
6.4	1573	0.96	**785A4127**	17000
6.3	1597	2.12	786A4324	19700
6.3	1588	2.71	**787A4027**	29870
6.1	1630	2.64	787A4424	29868
6.0	1675	0.94	785A4424	17000
5.8	1726	1.96	**786A4127**	19000
5.8	1738	2.44	**787A4127**	29870
5.8	1737	2.44	787A4524	29868
5.7	1759	1.93	786A4424	19700
5.6	1787	3.58	**788A4127**	43400
5.4	1849	3.46	788A4524	43000
5.2	1925	2.20	**787A4227**	29855
5.1	1959	0.84	**785A4227**	17000
5.1	1949	2.17	787A4624	29853
5.1	1963	3.23	788A4624	43000
4.9	2041	0.83	785A4624	17000
4.9	2057	3.11	**788A4227**	43400
4.8	2080	1.63	**786A4227**	19000
4.6	2161	1.58	786A4624	19700
4.5	2244	1.92	**787A4327**	29837
4.5	2236	1.93	787A4724	29832
4.5	2243	3.23	**788A4327**	43400
4.3	2357	1.47	786A4724	19700
4.3	2321	3.12	788A4724	43000
4.1	2439	1.43	**786A4327**	19000
4.1	2471	1.74	**787A4427**	29805
4.0	2513	1.71	787A4824	29810
4.0	2486	2.92	788A4824	43000
3.9	2576	2.81	**788A4427**	43400
3.8	2672	1.32	**786A4427**	19000
3.8	2645	1.60	**787A4527**	29805
3.7	2705	1.31	786A4824	19700
3.6	2772	2.32	**788A4527**	43400
3.4	2953	1.44	**787A4627**	29842
3.4	2974	2.15	**788A4627**	43400
3.1	3270	1.10	**786A4627**	19000
2.9	3398	1.27	**787A4727**	29770
2.9	3481	2.08	**788A4727**	43390
2.8	3585	1.00	**786A4727**	19000
2.7	3731	1.94	**788A4827**	43380
2.6	3823	1.13	**787A4827**	29706
2.4	4108	0.88	**786A4827**	19000

1.5 KW MOTOR

Nominal Output Rev/Min	Output Torque Nm	Service Factor	Unit Selection	Overhung Load N
177	79	0.91	780A0528	1550
162	85	3.66	781A0728	3663
162	85	3.66	782A0728	3663
155	90	0.85	780A0728	1626
149	**94**	**3.06**	**781A0537**	**3880**
149	**94**	**3.06**	**782A0537**	**3880**
147	94	3.37	781A0828	3734
147	94	3.37	782A0828	3734
137	101	0.80	780A0828	1701
129	107	3.04	781A1028	3823
129	107	3.04	782A1028	3823
106	**131**	**2.43**	**781A0737**	**3958**
106	**131**	**2.43**	**782A0737**	**3958**
102	136	2.47	781A1128	3966
102	136	2.47	782A1128	3966
96	**145**	**2.26**	**781A0837**	**4025**
96	**145**	**2.26**	**782A0837**	**4025**
90	154	2.23	781A1228	4028
90	154	2.23	782A1228	4028
87	**159**	**3.85**	**783A0837**	**5610**
85	**164**	**2.00**	**781A1037**	**4101**
85	**164**	**2.00**	**782A1037**	**4101**
84	165	3.47	783A1228	5640
77	**180**	**3.46**	**783A1037**	**5728**
73	190	1.87	781A1428	4103
73	190	1.87	782A1428	4103
72	192	3.26	783A1428	5780
68	205	3.93	**784A1137**	8460
67	209	1.62	**781A1137**	4220
67	209	1.62	**782A1137**	4220
66	210	1.72	781A1528	4129
66	210	1.72	782A1528	4129
65	215	2.98	**783A1137**	5870
65	213	3.47	784A1528	8520
64	215	2.97	783A1528	5874
60	229	2.81	783A1628	5913
60	232	3.54	**784A1237**	8704
59	237	1.49	**781A1237**	4255
59	237	1.49	**782A1237**	4255
58	240	1.54	781A1628	4137
58	240	1.54	782A1628	4137
56	247	2.32	**783A1237**	5968
56	248	3.37	784A1628	8820
51	272	1.38	781A1728	4135
51	272	1.38	782A1728	4135
51	271	2.43	783A1728	6024
50	277	3.03	**784A1437**	9046
50	277	3.17	784A1728	9040
48	291	1.31	**781A1437**	4287
48	291	1.31	**782A1437**	4287
48	288	2.26	**783A1437**	6045
48	290	2.30	783A1828	6050
47	296	3.01	784A1828	9152
46	299	1.25	781A1828	4105
46	299	1.25	782A1828	4105
44	319	2.32	**784A1537**	9309
43	323	1.18	**781A1537**	4283
43	323	1.18	**782A1537**	4283
43	321	2.10	**783A1537**	6084
40	344	1.14	781A1928	4040
40	344	1.14	782A1928	4040
40	342	1.99	**783A1637**	6093
40	350	2.53	784A1928	9449
39	360	1.91	783A1928	6103
38	367	1.05	**781A1637**	4258
38	367	1.05	**782A1637**	4258
38	370	2.26	**784A1637**	9602
37	373	0.99	781A2028	3980
37	373	0.99	782A2028	3980
37	373	2.38	784A2028	9586
36	385	3.94	**785A1637**	13300
34	407	1.71	**783A1737**	6088
34	414	2.12	**784A1737**	9740
33	416	0.90	**781A1737**	4200
33	416	0.90	**782A1737**	4200
33	423	1.66	783A2028	6090
33	419	3.70	785A2028	13500
32	434	1.61	**783A1837**	6067
32	437	3.65	**785A1737**	13706
31	446	0.87	781A2228	3800
31	446	0.87	782A2228	3800
31	441	2.02	**784A1837**	9872
30	458	0.82	**781A1837**	4133
30	458	0.82	**782A1837**	4133
30	464	1.53	783A2228	6053
30	463	1.93	784A2228	9926
29	483	3.27	785A2228	14000
29	484	3.33	**785A1837**	13977
27	523	1.70	**784A1937**	10123
26	537	1.32	**783A1937**	5925
25	559	1.59	**784A2037**	10211
25	546	1.63	784A2328	10173
25	552	3.02	**785A1937**	14363
24	565	0.96	783A2328	5892
24	577	2.84	785A2328	14533
23	596	1.50	784A2428	10274
22	634	1.13	**783A2037**	5710
22	632	2.62	785A2428	14756
22	624	2.70	**785A2037**	14762
20	695	1.04	**783A2237**	5550
20	694	1.29	**784A2237**	10383
19	728	0.96	784A2528	10439
19	722	2.39	**785A2237**	15135
18	753	2.11	785A2528	15234
18	782	3.68	**786A2237**	19000

Series F Gearboxes : Motorised selection

Nominal Output Rev/Min	Output Torque Nm	Service Factor	Unit Selection	Overhung Load N
17	815	1.10	**784A2337**	10500
17	820	3.50	786A2528	19700
16	890	1.00	**784A2437**	10500
16	872	1.46	785A2728	15631
16	861	2.08	**785A2337**	15630
15	942	1.92	**785A2437**	15838
15	894	3.23	786A2728	19700
15	910	3.24	**786A2337**	19000
14	962	1.14	785A2828	15851
14	997	3.01	**786A2437**	19000
14	988	4.00	**787A2537**	29900
13	1043	1.19	785A3728	16088
13	1022	2.63	786A2828	19700
12	1118	1.06	785A3828	16192
12	1131	1.46	**785A2537**	16117
12	1100	3.08	786A3728	19700
12	1107	3.31	**787A2637**	29900
12	1100	3.85	787A3828	29900
11	1294	1.00	**785A2737**	16400
11	1226	2.52	**786A2537**	19000
11	1204	2.81	786A3828	19700
11	1273	3.38	**787A2737**	29900
11	1274	3.38	787A3928	29900
10	1323	0.96	785A3928	16400
10	1335	2.34	**786A2737**	19000
10	1362	2.49	786A3928	19700
10	1429	3.01	**787A2837**	29900
10	1416	3.04	787A4028	29873
9.6	1412	0.92	785A4128	16500
9.3	1484	2.86	**787A3737**	29886
9.0	1531	1.91	**786A2837**	19000
8.9	1536	2.21	786A4128	19700
8.8	1570	0.91	**785A3737**	16500
8.8	1549	2.74	787A4128	29873
8.5	1610	3.98	788A4128	43000
8.3	1646	2.06	**786A3737**	19000
8.3	1647	2.57	**787A3837**	29873
8.3	1655	3.87	**788A3837**	43400
8.2	1673	0.82	**785A3837**	16500
8.0	1713	2.47	787A4228	29865
7.8	1754	0.81	785A4228	16600
7.6	1802	1.88	**786A3837**	19000
7.4	1854	3.45	788A4228	43000
7.3	1861	1.82	786A4228	19700
7.3	1868	3.88	**788A3937**	43400
7.2	1910	2.26	**787A3937**	29860
6.8	1994	2.16	787A4328	29847
6.8	2018	3.59	788A4328	43000
6.7	2039	1.66	**786A3937**	19000
6.6	2077	3.49	**788A4037**	43400
6.5	2121	2.03	**787A4037**	29836
6.3	2163	1.57	786A4328	19700
6.2	2207	1.95	787A4428	29833
6.0	2304	1.47	**786A4137**	19000
5.9	2320	1.83	**787A4137**	29836
5.9	2324	3.12	788A4428	43000
5.8	2353	1.80	787A4528	29833
5.8	2360	2.71	**788A4137**	43400
5.7	2381	1.42	786A4428	19700
5.5	2503	2.56	788A4528	43000
5.4	2570	1.65	**787A4237**	29804
5.2	2639	1.61	787A4628	29800
5.1	2717	2.36	**788A4237**	43400
5.1	2684	2.38	788A4628	43000
4.9	2777	1.22	**786A4237**	19000
4.7	2926	1.17	786A4628	19700
4.6	2996	1.44	**787A4337**	29791
4.6	2962	2.45	**788A4337**	43300
4.5	3028	1.42	787A4728	29783
4.3	3192	1.08	786A4728	19700
4.3	3142	2.31	788A4728	43000
4.2	3256	1.07	**786A4337**	19000
4.1	3299	1.31	**787A4437**	29737
4.0	3402	1.27	787A4828	29744
4.0	3402	2.13	**788A4437**	43300
4.0	3366	2.15	788A4828	43000
3.9	3531	1.20	**787A4537**	29737
3.8	3567	0.99	**786A4437**	19000
3.7	3663	0.97	786A4828	19700

Nominal Output Rev/Min	Output Torque Nm	Service Factor	Unit Selection	Overhung Load N
3.7	3660	1.75	**788A4537**	43300
3.5	3942	1.08	**787A4637**	29800
3.5	3927	1.63	**788A4637**	43300
3.0	4536	0.95	**787A4737**	29700
3.0	4598	1.58	**788A4737**	43300
2.8	4928	1.47	**788A4837**	43300
2.7	5103	0.84	**787A4837**	29600

2.2 KW MOTOR

Nominal Output Rev/Min	Output Torque Nm	Service Factor	Unit Selection	Overhung Load N
228	89	3.20	781A0536	3280
228	89	3.20	782A0536	3280
194	105	3.76	**783A0245**	4430
163	125	2.51	781A0736	3405
163	125	2.51	782A0736	3405
151	135	3.76	**784A0545**	6590
149	136	2.11	**781A0545**	3553
149	136	2.11	**782A0545**	3553
148	138	2.31	781A0836	3451
148	138	2.31	782A0836	3451
139	146	3.85	**785A0545**	8950
138	147	3.49	**783A0445**	4710
132	155	3.74	783A0836	4760
130	157	2.08	781A1036	3503
130	157	2.08	782A1036	3503
123	165	3.36	**783A0545**	4790
116	176	3.36	783A1036	4840
110	186	3.00	**783A0745**	4870
107	190	3.41	**784A0745**	7160
106	190	1.68	**781A0745**	3535
106	190	1.68	**782A0745**	3535
102	199	1.69	781A1136	3563
102	199	1.69	782A1136	3563
102	199	3.65	784A1136	7250
100	203	3.85	**785A0745**	9780
97	209	2.89	783A1136	4941
96	210	1.56	**781A0845**	3561
96	210	1.56	**782A0845**	3561
96	213	3.24	**784A0845**	7340
90	226	1.53	781A1236	3573
90	226	1.53	782A1236	3573
90	226	3.42	784A1236	7450
89	228	3.85	**785A0845**	10100
86	236	2.60	**783A0845**	4987
85	238	1.38	**781A1045**	3581
85	238	1.38	**782A1045**	3581
85	239	3.00	**784A1045**	7520
84	241	2.38	783A1236	4999
81	251	3.85	**785A1045**	10300
76	267	2.33	**783A0945**	5023
76	270	3.10	784A1436	7722
73	277	1.29	781A1436	3551
73	277	1.29	782A1436	3551
73	280	2.24	783A1436	5035
67	303	1.11	**781A1145**	3571
67	303	1.11	**782A1145**	3571
67	304	2.65	**784A1145**	7885
66	308	1.18	781A1536	3521
66	308	1.18	782A1536	3521
66	311	2.38	784A1536	7927
65	313	2.04	783A1536	5042
64	319	2.01	**783A1145**	5030
62	329	3.85	**785A1145**	11000
61	334	1.93	783A1636	5026
59	344	1.03	**781A1245**	3528
59	344	1.03	**782A1245**	3528
59	345	2.39	**784A1245**	8053
58	350	1.06	781A1636	3454
58	350	1.06	782A1636	3454
56	367	1.57	**783A1245**	5002
56	361	2.31	784A1636	8131
55	374	3.57	**785A1245**	11400
54	375	3.70	785A1636	11400

Nominal Output Rev/Min	Output Torque Nm	Service Factor	Unit Selection	Overhung Load N
51	397	0.94	781A1736	3370
51	397	0.94	782A1736	3370
51	395	1.67	783A1736	4973
50	411	2.05	**784A1445**	8270
50	403	2.18	784A1736	8271
48	4.22	0.90	**781A1445**	3416
48	4.22	0.90	**782A1445**	3416
48	427	1.52	**783A1445**	4921
48	422	1.58	783A1836	4929
48	425	3.43	785A1736	11700
47	437	0.86	781A1836	3276
47	437	0.86	782A1836	3276
47	431	2.07	784A1836	8334
45	453	3.17	**785A1445**	11800
43	468	0.81	**781A1545**	3331
43	468	0.81	**782A1545**	3331
43	476	1.42	**783A1545**	4828
43	472	1.57	**784A1545**	8416
43	471	3.12	785A1836	11927
41	497	2.97	**785A1545**	12100
40	508	1.34	**783A1645**	4753
40	509	1.74	784A1936	8485
39	524	1.31	783A1936	4715
38	540	2.83	785A1936	12247
37	549	1.52	**784A1645**	8557
37	543	1.64	784A2036	8550
36	572	2.66	**785A1645**	12394
34	603	1.15	**783A1745**	4501
33	617	1.14	783A2036	4456
33	614	1.43	**784A1745**	8586
33	610	2.54	785A2036	12535
32	643	1.09	**783A1845**	4375
31	654	1.36	**784A1845**	8633
31	648	2.47	**785A1745**	12678
30	675	1.05	783A2236	4265
30	674	1.32	784A2236	8644
29	703	2.25	785A2236	12874
28	717	2.24	**785A1845**	12849
27	748	3.44	**786A1845**	16700
27	759	3.53	786A2236	16800
26	795	1.12	784A2336	8655
26	775	1.14	**784A1945**	8651
25	796	0.89	**783A1945**	3829
25	829	1.07	**784A2045**	8635
25	819	2.04	**785A1945**	13075
24	841	1.95	785A2336	13191
24	849	3.19	**786A1945**	17200
23	868	1.03	784A2436	8616
23	885	3.09	786A2336	17400
22	921	1.80	785A2436	13300
22	926	1.82	**785A2045**	13297
21	972	2.88	786A2436	17723
21	956	2.91	**786A2045**	17600
20	1028	0.87	**784A2245**	8455
19	1070	1.62	**785A2245**	13448
19	1079	3.34	787A2636	29900
18	1098	1.45	785A2536	13496
18	1159	2.48	**786A2245**	18240
17	1194	2.40	786A2536	18389
16	1270	1.00	785A2736	13591
16	1276	1.40	**785A2345**	13606
16	1302	2.22	786A2736	18663
16	1246	3.46	**787A2345**	29900
16	1240	3.47	787A2736	29900
15	1397	1.300	**785A2445**	13634
15	1349	2.19	**786A2345**	18757
15	1391	3.100	787A2836	29900
15	1377	3.13	**787A2445**	29900
14	1489	1.81	786A2836	19113
14	1478	2.03	**786A2445**	19050
14	1464	2.70	**787A2545**	29876
14	1441	2.94	787A3736	29890
13	1519	0.82	785A3736	13648
13	1602	2.12	786A3736	19393
13	1603	2.64	787A3836	29882
13	1599	3.51	**788A2645**	43400
12	1677	0.98	**785A2545**	13477
12	1641	2.23	**787A2645**	29865

Series F Gearboxes : Motorised selection

Bold print indicates a 6 pole motor is used

Double reduction

Triple reduction

Nominal Output Rev/Min	Output Torque Nm	Service Factor	Unit Selection	Overhung Load N
12	1632	3.92	788A3836	43400
11	1817	1.70	**786A2545**	19524
11	1754	1.93	786A3836	19600
11	1887	2.28	**787A2745**	29856
11	1856	2.32	787A3936	29865
11	1871	3.87	**788A2745**	43400
11	1842	3.93	788A3936	43400
10	1980	1.58	**786A2745**	19658
10	1984	1.71	786A3936	19793
10	2118	2.03	**787A2845**	29848
10	2063	2.09	787A4036	29826
10	2009	3.51	**788A2845**	43400
10	2047	3.54	788A4036	43400
9.2	2200	1.93	**787A3745**	29863
9.2	2197	2.91	**788A3845**	43400
9.0	2237	1.52	786A4136	19938
8.9	2270	1.29	**786A2845**	19908
8.9	2257	1.88	787A4136	29826
8.7	2327	2.75	788A4136	43400
8.3	2442	1.74	**787A3845**	29826
8.3	2440	2.62	**788A3845**	43400
8.2	2441	1.39	**786A3745**	20014
8.1	2495	1.70	787A4236	29820
7.5	2672	1.27	**786A3845**	20059
7.5	2581	2.39	788A4236	43400
7.3	2755	2.63	**788A3945**	43400
7.1	2831	1.52	**787A3945**	29790
6.9	2904	1.48	787A4336	29780
6.9	2918	2.48	788A4336	43400
6.7	3022	1.12	**786A3945**	19995
6.6	3062	2.37	**788A4045**	43400
6.4	3144	1.37	**787A4045**	29776
6.2	3215	1.34	787A4436	29771
6.0	3361	2.16	788A4436	43300
5.9	3415	0.99	**786A4145**	18688
5.9	3426	1.24	787A4536	29771
5.8	3439	1.23	**787A4145**	29776
5.8	3480	1.84	**788A4145**	43400
5.6	3619	1.77	788A4536	43300
5.3	3810	1.11	**787A4245**	29714
5.2	3844	1.10	787A4636	29706
5.2	3881	1.65	788A4636	43300
5.2	4074	2.48	789A4636	56000
5.0	4006	1.60	**788A4245**	43300
4.9	4117	0.82	**786A4245**	16008
4.6	4367	1.66	**788A4345**	43300
4.5	4442	0.97	**787A4345**	29711
4.5	4410	0.98	787A4736	29697
4.5	4640	2.29	789A4736	56000
4.4	4543	1.60	788A4736	43300
4.2	5040	2.01	**789A4445**	56000
4.1	4890	0.88	**787A4445**	29617
4.1	4867	1.49	788A4836	43300
4.0	4955	0.87	787A4836	29630
4.0	5016	1.45	**788A4445**	43300
3.8	5234	0.81	**787A4545**	29617
3.7	5397	1.19	**788A4545**	43300
3.7	5741	1.85	**789A4545**	56000
3.5	5790	1.11	**788A4645**	43300
3.4	6197	1.63	**789A4645**	56000
3.0	6779	1.07	**788A4745**	43300
3.0	7059	1.50	**789A4745**	56000
2.8	7265	1.00	**788A4845**	43200

3.0 KW MOTOR

Nominal Output Rev/Min	Output Torque Nm	Service Factor	Unit Selection	Overhung Load N
230	120	3.88	784A0538	5730
228	122	2.25	781A0538	2895
228	122	2.35	782A0538	2895
210	133	3.88	783A0438	4070
198	140	2.81	**783A0253**	4113
187	148	3.65	783A0538	4140
167	166	3.35	783A0738	4200
163	171	1.84	781A0738	3039
163	171	1.84	782A0738	3039
163	170	3.35	784A0738	6210
154	180	2.81	**784A0553**	6299
148	188	1.70	781A0838	3058
148	188	1.70	782A0838	3058
146	190	3.20	784A0838	6360
142	195	2.88	**785A0553**	8684
141	197	2.61	**783A0453**	4265
132	211	2.74	783A0838	4289
130	214	1.53	781A1038	3072
130	214	1.53	782A1038	3072
130	214	3.02	784A1038	6517
126	221	2.51	**783A0553**	4292
116	240	2.46	783A1038	4307
112	248	2.25	**783A0753**	4310
110	254	2.55	**784A0753**	6748
102	271	1.24	781A1138	3051
102	271	1.24	782A1138	3051
102	272	2.68	784A1138	6815
102	271	2.88	**785A0753**	9411
98	285	2.42	**784A0853**	6879
97	285	2.12	783A1138	4306
94	294	3.94	785A1138	9560
91	305	2.88	**785A0853**	9683
90	308	1.12	781A1238	3012
90	308	1.12	782A1238	3012
90	308	2.51	784A1238	6957
88	315	1.95	**783A0853**	4275
87	319	2.25	**784A1053**	7002
84	329	1.75	783A1238	4268
83	336	2.88	**785A1053**	9850
83	334	3.65	785A1238	9840
78	357	1.75	**783A1053**	4217
76	368	2.27	784A1438	7135
73	378	0.94	781A1438	2904
73	378	0.94	782A1438	2904
73	382	1.64	783A1438	4184
69	406	1.99	**784A1153**	7228
68	407	3.24	785A1438	10300
66	420	0.86	781A1538	2827
66	420	0.86	782A1538	2827
66	424	1.75	784A1538	7250
65	427	1.50	783A1538	4091
65	426	1.50	**783A1153**	4070
63	440	2.88	**785A1153**	10409
62	445	3.03	785A1538	10400
61	456	1.41	783A1638	4013
61	460	1.79	**784A1253**	7309
58	477	0.78	781A1638	2702
58	477	0.80	782A1638	2702
57	490	1.17	**783A1253**	3899
56	493	1.70	784A1638	7345
56	500	2.68	**785A1253**	10717
54	512	2.71	785A1638	10715
51	539	1.22	783A1738	3771
51	549	1.53	**784A1453**	7382
50	550	1.60	784A1738	7393
49	570	1.14	**783A1453**	3636
48	576	1.16	783A1838	3649
48	580	2.51	785A1738	10926
47	587	1.52	784A1838	7399
46	605	2.38	**785A1453**	10986
44	636	1.06	**783A1553**	3393
44	631	1.17	**784A1553**	7395
43	642	2.29	785A1838	11076
42	664	2.23	**785A1553**	11194
41	678	1.01	**783A1653**	3221
41	673	3.68	786A1838	14500
40	695	1.28	784A1938	7384

Nominal Output Rev/Min	Output Torque Nm	Service Factor	Unit Selection	Overhung Load N
39	715	0.96	783A1938	3130
39	708	3.50	**786A1553**	14700
38	734	1.14	**784A1653**	7363
38	736	2.08	785A1938	11272
37	741	1.20	784A2038	7367
37	759	3.39	786A1938	14900
36	763	1.99	**785A1653**	11360
35	806	0.86	**783A1753**	2686
34	819	1.07	**784A1753**	7268
34	824	3.17	**786A1653**	15200
33	841	0.83	783A2038	2590
33	833	1.86	785A2038	11432
32	859	0.81	**783A1853**	2441
32	874	1.02	**784A1853**	7217
32	866	1.85	**785A1753**	11504
32	858	3.06	786A2038	15300
30	919	0.97	784A2238	7180
30	912	2.87	**786A1753**	15500
29	959	1.65	785A2238	11589
29	958	1.68	**785A1853**	11559
28	1000	2.58	**786A1853**	15688
27	1035	0.86	**784A1953**	6970
27	1035	2.59	786A2238	15773
26	1085	0.82	784A2338	6920
25	1107	0.80	**784A2053**	6835
25	1093	1.53	**785A1953**	11602
25	1133	2.39	**786A1953**	16057
24	1146	1.43	785A2338	11658
24	1175	3.67	**787A2053**	29900
23	1207	2.27	786A2338	16198
22	1256	1.32	785A2438	11637
22	1236	1.37	**785A2053**	11623
22	1277	2.18	**786A2053**	16315
22	1291	3.28	**787A2153**	29900
22	1236	3.48	787A2438	29900
21	1326	2.11	786A2438	16407
21	1311	2.74	787A2538	29900
20	1426	2.97	**787A2253**	29875
19	1429	1.21	**785A2253**	11520
19	1471	2.45	787A2638	29877
19	1456	3.85	788A2638	43400
18	1497	1.06	785A2538	11510
18	1548	1.86	**786A2253**	16687
17	1628	1.76	786A2538	16777
17	1664	2.59	**787A2353**	29869
16	1704	1.05	**785A2353**	11292
16	1776	1.63	786A2738	16907
16	1691	2.55	787A2738	29865
16	1720	4.00	788A2738	43400
15	1865	0.97	**785A2453**	11114
15	1802	1.64	**786A2353**	16941
15	1897	2.27	787A2838	29869
15	1839	2.34	**787A2453**	29869
15	1827	3.85	788A2838	43400
15	1878	3.86	**788A2453**	43400
14	2030	1.32	786A2838	17086
14	1973	1.52	**786A2453**	17050
14	1955	2.02	**787A2553**	29850
14	1966	2.16	787A3738	29869
14	2022	3.05	**788A2553**	43400
14	1989	3.20	788A3738	43400
13	2184	1.55	786A3738	17206
13	2191	1.67	**787A2653**	29826
13	2186	1.94	787A3838	29863
13	2169	2.59	**788A2653**	43400
12	2210	2.90	788A3838	43400
11	2426	1.27	**786A2553**	17068
11	2392	1.42	786A3838	17200
11	2531	1.70	787A3938	29826
11	2520	1.71	**787A2753**	29806
11	2537	2.86	**788A2753**	43400
11	2495	2.91	788A3938	43400
10	2644	1.18	**786A2753**	17010
10	2706	1.25	786A3938	17101
10	2829	1.52	**787A2853**	29790
10	2813	1.53	787A4038	29773
10	2726	2.59	**788A2853**	43400
10	2772	2.61	788A4038	43400
9.2	2980	2.15	**788A3853**	43400

Series F Gearboxes : Motorised selection

Nominal Output Rev/Min	Output Torque Nm	Service Factor	Unit Selection	Overhung Load N
9.1	3031	0.96	**786A2853**	16878
8.9	3078	1.38	787A4138	29773
8.7	3152	2.03	788A4138	43400
8.4	3259	1.04	**786A3753**	16712
8.3	3310	1.93	**788A3853**	43400
8.1	3403	1.25	787A4238	29769
7.7	3568	0.95	**786A3853**	16451
7.6	3630	1.76	788A4238	43400
7.3	3737	1.94	**788A3953**	43400
6.9	3960	1.09	787A4338	29704
6.9	3951	1.83	788A4338	43400
6.8	4035	0.84	**786A3953**	15910
6.6	4154	1.74	**788A4053**	43400
6.3	4518	2.24	789A4438	56000
6.2	4384	0.98	787A4438	29700
6.0	4551	1.59	788A4438	43400
5.9	4673	0.91	787A4538	29700
5.8	4720	1.36	**788A4153**	43400
5.6	4901	1.31	788A4538	43400
5.6	5146	2.06	789A4538	56000
5.2	5243	0.81	787A4638	29600
5.2	5258	1.22	788A4638	43400
5.2	5555	1.82	789A4638	56000
5.1	5434	1.18	**788A4253**	43400
4.6	5924	1.22	**788A4353**	43400
4.5	6328	1.68	789A4738	56000
4.4	6152	1.18	788A4738	43400
4.3	6729	1.50	**789A4453**	56000
4.2	6850	2.41	**790A4453**	62200
4.1	6590	1.10	788A4838	43400
4.0	6804	1.07	**788A4453**	43400
3.9	7399	2.22	**790A4553**	62200
3.7	7321	0.87	**788A4553**	43400
3.7	7665	1.39	**789A4553**	56000
3.5	7855	0.81	**788A4653**	43400
3.5	8275	1.22	**789A4653**	56000
3.4	8515	1.94	**790A4653**	62200
3.0	9426	1.13	**789A4753**	56000
3.0	9197	1.79	**790A4753**	62200

4.0 KW MOTOR

Nominal Output Rev/Min	Output Torque Nm	Service Factor	Unit Selection	Overhung Load N
296	124	3.17	783A0246	3580
231	160	2.92	784A0546	5487
228	162	1.76	781A0546	2694
228	162	1.76	782A0546	2694
212	174	3.24	785A0546	7570
211	176	2.92	783A0446	3702
198	187	2.11	**783A0255**	3718
188	197	2.75	783A0546	3727
168	220	2.52	783A0746	3736
164	227	2.52	784A0746	5868
163	228	1.38	781A0746	2635
163	228	1.38	782A0746	2635
154	241	2.11	**784A0555**	5935
153	241	3.24	785A0746	8200
148	251	1.27	781A0846	2613
148	251	1.27	782A0846	2613
146	253	2.40	784A0846	5979
142	261	2.16	**785A0555**	8352
141	263	1.96	**783A0455**	3709
136	271	3.24	785A0846	8420
132	281	2.06	783A0846	3701
130	285	1.14	781A1046	2569
130	285	1.14	782A1046	2569
130	285	2.28	784A1046	6088
126	294	1.88	**783A0555**	3670
124	298	3.24	785A1046	8590
116	318	1.85	783A1046	3641
112	331	1.68	**783A0755**	3610
110	338	1.91	**784A0755**	6233
103	362	2.02	784A1146	6272
102	362	0.93	781A1146	2424

Nominal Output Rev/Min	Output Torque Nm	Service Factor	Unit Selection	Overhung Load N
102	362	0.93	782A1146	2424
102	362	2.16	**785A0755**	8951
98	379	1.59	783A1146	3512
98	380	1.82	**784A0855**	6303
95	390	2.97	785A1146	9069
91	410	1.89	784A1246	6341
91	407	2.16	**785A0855**	9162
90	411	0.84	781A1246	2313
90	411	0.84	782A1246	2313
88	420	1.46	**783A0855**	3386
87	426	1.68	**784A1055**	6356
85	437	1.31	783A1246	3353
83	448	2.16	**785A1055**	9287
83	444	2.75	785A1246	9282
78	477	1.31	**783A1055**	3209
76	489	1.71	784A1446	6400
73	508	1.24	783A1446	3121
69	542	1.49	**784A1155**	6407
69	541	2.44	785A1446	9616
66	564	1.31	784A1546	6404
65	567	1.13	783A1546	2902
65	568	1.13	**783A1155**	2870
63	587	2.16	**785A1155**	9672
62	591	2.28	785A1546	9660
61	606	1.06	783A1646	2746
61	614	1.34	**784A1255**	6379
61	611	3.55	**786A1155**	12700
59	632	3.59	786A1546	12800
57	653	0.88	**783A1255**	2520
57	655	1.28	784A1646	6362
56	667	2.01	**785A1255**	9864
54	680	2.04	785A1646	9859
54	684	3.30	**786A1255**	13000
52	717	0.92	783A1746	2270
51	732	1.15	**784A1455**	6273
51	731	1.20	784A1746	6296
50	737	3.24	786A1646	13200
49	760	0.86	**783A1455**	2030
48	765	0.87	783A1846	2049
48	781	1.14	784A1846	6230
48	771	1.89	785A1746	9959
46	807	1.78	**785A1455**	9969
45	814	3.02	786A1746	13500
44	842	0.88	**784A1555**	6120
44	841	2.88	**786A1455**	13500
43	853	1.72	785A1846	10013
42	886	1.67	**785A1555**	10062
42	894	2.77	786A1846	13665
40	923	0.96	784A1946	6007
39	944	2.62	**786A1555**	13806
38	978	0.86	**784A1655**	5870
38	985	0.90	784A2046	5887
38	978	1.56	785A1946	10054
37	1008	2.55	786A1946	13954
36	1018	1.49	**785A1655**	10066
34	1093	0.81	**784A1755**	5620
34	1106	1.40	785A2046	10054
34	1098	2.38	**786A1655**	14156
34	1101	3.85	**787A1755**	29900
33	1140	2.31	786A2046	14230
32	1155	1.38	**785A1755**	10036
32	1150	3.69	787A2146	29900
30	1217	2.15	**786A1755**	14345
30	1220	3.47	**787A1855**	29900
29	1274	1.24	785A2246	9981
29	1277	1.26	**785A1855**	9947
29	1269	3.34	787A2246	29900
28	1333	1.93	**786A1855**	14424
27	1376	1.95	786A2246	14490
26	1413	3.05	**787A1955**	29877
25	1458	1.14	**785A1955**	9761
25	1511	1.79	**786A1955**	14629
25	1488	2.89	787A2346	29900
24	1523	1.08	785A2346	9741
24	1567	2.75	**787A2055**	29875
23	1605	1.71	786A2346	14696
23	1643	2.62	787A2446	29877
22	1669	0.99	785A2446	9557
22	1648	1.02	**785A2055**	9530

Nominal Output Rev/Min	Output Torque Nm	Service Factor	Unit Selection	Overhung Load N
22	1702	1.63	**786A2055**	14709
22	1721	2.46	**787A2155**	29875
21	1762	1.59	786A2446	14761
21	1742	2.07	787A2546	29883
21	1793	3.44	788A2546	43400
21	1727	3.71	**788A2155**	43400
20	1901	2.23	**787A2255**	29841
19	1906	0.91	**785A2255**	9110
19	1955	1.84	787A2646	29848
19	1935	2.90	788A2646	43400
19	1994	3.21	**788A2255**	43400
18	2064	1.39	**786A2255**	14745
17	2164	1.33	786A2546	14762
17	2218	1.94	**787A2355**	29832
17	2175	3.33	**788A2355**	43400
16	2359	1.22	786A2746	14712
16	2247	1.92	787A2746	29822
16	2252	3.22	788A2746	43400
15	2403	1.23	**786A2355**	14671
15	2521	1.71	787A2846	29832
15	2452	1.76	**787A2455**	29832
15	2428	2.90	788A2846	43400
15	2491	2.91	**788A2455**	43400
14	2697	1.00	786A2846	14553
14	2631	1.14	**786A2455**	14550
14	2607	1.51	**787A2555**	29816
14	2612	1.62	787A3746	29842
14	2682	2.30	**788A2555**	43400
14	2642	2.41	788A3746	43300
13	2902	1.17	786A3746	14473
13	2922	1.25	**787A2655**	29778
13	2904	1.46	787A3846	29839
13	2877	1.95	**788A2655**	43400
12	2936	2.18	788A3846	43300
11	3235	0.95	**786A2555**	14000
11	3179	1.07	786A3846	14200
11	3360	1.28	**787A2755**	29743
11	3362	1.28	787A3946	29778
11	3366	2.15	**788A2755**	43400
11	3315	2.19	788A3946	43300
10	3525	0.88	**786A2755**	13700
10	3596	0.94	786A3946	13736
10	3772	1.14	**787A2855**	29717
10	3738	1.15	787A4046	29706
10	3615	1.95	**788A2855**	43400
10	3683	1.97	788A4046	43300
9.3	3953	1.62	**788A3855**	43300
9.0	4053	0.84	786A4146	13080
8.9	4090	1.04	787A4146	29706
8.9	4269	2.49	789A4146	56000
8.7	4187	1.53	788A4146	43300
8.4	4391	1.46	**788A3855**	43300
8.1	4521	0.94	787A4246	29706
8.1	4740	2.13	789A4246	56000
7.6	4823	1.33	788A4246	43300
7.4	4957	1.46	**788A3955**	43300
7.1	5400	1.97	789A4346	56000
6.9	5262	0.82	787A4346	29609
6.9	5250	1.38	788A4346	43300
6.6	5510	1.32	**788A4055**	43300
6.4	6003	1.69	789A4446	56000
6.0	6046	1.20	788A4446	43200
5.9	6261	1.02	**788A4155**	43300
5.6	6512	0.98	788A4546	43200
5.6	6837	1.55	789A4546	56000
5.2	6982	0.92	788A4646	43200
5.2	7381	1.37	789A4646	56000
5.1	7208	0.89	**788A4255**	43200
4.7	7857	0.92	**788A4355**	43200
4.5	8407	1.26	789A4746	56000
4.4	8174	0.89	788A4746	43200
4.3	8973	1.13	**789A4455**	56000
4.2	9134	1.81	**790A4455**	62200
4.1	8756	0.83	788A4846	43100
4.0	9025	0.80	**788A4455**	43100
3.9	9865	1.67	**790A4555**	62200
3.7	10220	1.04	**789A4555**	56000

Series F Gearboxes : Motorised selection

Bold print indicates a 6 pole motor is used

Double reduction

Triple reduction

Nominal Output Rev/Min	Output Torque Nm	Service Factor	Unit Selection	Overhung Load N
3.5	11033	0.92	**789A4655**	56000
3.4	11354	1.46	**790A4655**	62200
3.1	12263	1.34	**790A4755**	62200
3.0	12567	0.84	**789A4755**	56000

5.5 KW MOTOR

Nominal Output Rev/Min	Output Torque Nm	Service Factor	Unit Selection	Overhung Load N
300	169	2.33	783A0254	3186
233	218	2.15	784A0554	5124
214	236	2.38	785A0554	7240
213	240	2.15	783A0454	3150
197	258	1.53	**783A0257**	3126
190	268	2.02	783A0554	3108
169	300	1.85	783A0754	3041
166	308	1.85	784A0754	5357
155	328	2.38	785A0754	7741
153	333	1.53	**784A0557**	5390
148	345	1.77	784A0854	5408
141	361	1.56	**785A0557**	7854
140	363	1.42	**783A0457**	2874
138	369	2.38	785A0854	7905
137	371	3.15	**786A0557**	10000
133	382	1.52	783A0854	2818
132	387	1.67	784A1054	5445
125	407	1.36	**783A0557**	2737
125	406	2.38	785A1054	8025
118	433	1.36	783A1054	2642
112	457	1.22	**783A0757**	2560
109	468	1.39	**784A0757**	5461
104	492	1.48	784A1154	5458
102	501	1.56	**785A0757**	8260
99	516	1.17	783A1154	2320
97	525	1.31	**784A0857**	5440
97	527	3.15	**786A0757**	10900
96	531	2.18	785A1154	8332
92	555	3.56	786A1154	11000
91	558	1.39	784A1254	5418
91	563	1.56	**785A0857**	8381
88	581	1.06	**783A0857**	2051
87	588	1.22	**784A1057**	5387
87	584	3.15	**786A0857**	11100
86	595	0.97	783A1254	1981
84	604	2.02	785A1254	8445
82	619	1.56	**785A1057**	8444
82	622	3.33	786A1254	11300
78	653	2.98	**786A1057**	11331
77	659	0.95	**783A1057**	1698
77	666	1.26	784A1454	5299
74	691	0.91	783A1454	1526
69	737	1.79	785A1454	8591
68	749	1.08	**784A1157**	5176
67	767	0.97	784A1554	5134
67	759	2.91	786A1454	11666
66	772	0.83	783A1554	1118
65	785	0.82	**783A1157**	1070
63	811	1.56	**785A1157**	8565
63	805	1.68	785A1554	8550
61	844	2.57	**786A1157**	11837
60	849	0.97	**784A1257**	4984
59	861	2.64	786A1554	11911
57	892	0.94	784A1654	4888
56	922	1.45	**785A1257**	8585
55	926	1.50	785A1654	8576
54	946	2.39	**786A1257**	12032
51	1012	0.83	**784A1457**	4610
51	995	0.88	784A1754	4649
51	1003	2.38	786A1654	12166
48	1063	0.84	784A1854	4476
48	1049	1.39	785A1754	8508
46	1116	1.29	**785A1457**	8443
46	1109	2.22	786A1754	12350
44	1161	1.27	785A1854	8417
44	1163	2.08	**786A1457**	12315
42	1224	1.21	**785A1557**	8364
42	1217	2.04	786A1854	12413
40	1288	3.35	787A1954	29900
39	1305	1.90	**786A1557**	12465
38	1331	1.15	785A1954	8226
37	1372	1.87	786A1954	12536
36	1407	1.08	**785A1657**	8126
36	1428	3.02	787A2054	29872
34	1506	1.03	785A2054	7987
34	1518	1.72	**786A1657**	12590
34	1522	2.79	**787A1757**	29870
33	1552	1.69	786A2054	12625
33	1565	2.71	787A2154	29868
32	1596	1.00	**785A1757**	7834
31	1660	3.85	**788A1857**	43300
30	1682	1.56	**786A1757**	12612
30	1686	2.51	**787A1857**	29872
29	1766	0.91	**785A1857**	7530
29	1734	0.91	785A2254	7570
29	1727	2.45	787A2254	29872
28	1842	1.40	**786A1857**	12528
28	1805	3.55	788A2254	43400
27	1872	1.43	786A2254	12566
27	1872	3.87	**788A1957**	43300
26	1953	2.21	**787A1957**	29839
26	1964	3.69	788A2354	43400
25	2015	0.83	**785A1957**	7000
25	2026	2.13	787A2354	29862
24	2089	1.30	**786A1957**	12486
24	2087	3.47	**788A2057**	43300
23	2184	1.25	786A2354	12443
23	2236	1.93	787A2454	29844
23	2166	1.99	**787A2057**	29837
22	2353	1.18	**786A2057**	12301
22	2362	2.71	**788A2157**	43300
22	2265	3.20	788A2454	43400
21	2398	1.17	786A2454	12292
21	2371	1.52	787A2554	29859
21	2379	1.78	**787A2157**	29837
21	2423	2.55	788A2554	43400
19	2661	1.35	787A2654	29805
19	2628	1.61	**787A2257**	29789
19	2614	2.15	788A2654	43400
19	2728	2.35	**788A2257**	43300
18	2853	1.01	**786A2257**	11833
17	2944	0.97	786A2554	11740
17	3066	1.41	**787A2357**	29775
17	3058	1.41	787A2754	29758
17	3043	2.38	788A2754	43400
17	2975	2.44	**788A2357**	43300
16	3211	0.90	786A2754	11419
15	3321	0.89	**786A2357**	11266
15	3430	1.26	787A2854	29775
15	3389	1.27	**787A2457**	29775
15	3408	2.13	**788A2457**	43300
15	3281	2.15	788A2854	43400
14	3637	0.82	**786A2457**	10800
14	3603	1.10	**787A2557**	29766
14	3668	1.68	**788A2557**	43300
14	3571	1.78	788A3754	43400
13	3950	0.86	786A3754	10373
13	4039	0.91	**787A2657**	29704
13	3935	1.43	**788A2657**	43300
13	3968	1.61	788A3854	43400
11	4645	0.93	**787A2757**	29650
11	4604	1.57	**788A2757**	43300
11	4480	1.62	788A3954	43400
11	4578	2.32	789A3954	56000
10	4945	1.43	**788A2857**	43300
10	4978	1.46	788A4054	43400
10	5099	1.98	789A4054	56000
9.6	5214	0.83	**787A2857**	29607
9.3	5407	1.18	**788A3857**	43200
9.0	5809	1.83	789A4154	56000
8.9	5659	1.13	788A4154	43400
8.4	6006	1.07	**788A3857**	43200
8.1	6450	1.57	789A4254	56000
8.0	6566	2.50	790A4254	62200
7.7	6518	0.98	788A4254	43400
7.4	6781	1.07	**788A3957**	43200
7.4	7092	2.31	790A4354	62200
7.1	7095	1.02	788A4354	43200
7.1	7348	1.44	789A4354	56000
6.7	7537	0.96	**788A4057**	43200
6.4	8168	1.24	789A4454	56000
6.3	8315	1.98	790A4454	62200
6.1	8171	0.89	788A4454	43100
5.8	8981	1.82	790A4554	62200
5.6	9304	1.14	789A4554	56000
5.2	10044	1.01	789A4654	56000
5.1	10336	1.60	790A4654	62200
4.7	11164	1.47	790A4754	62200
4.6	11441	0.93	789A4754	56000
4.2	12402	0.82	**789A4457**	56000
4.2	12625	1.31	**790A4457**	62200
3.9	13636	1.21	**790A4557**	62200
3.3	15693	1.05	**790A4657**	62200
3.1	16950	0.97	**790A4757**	62200

7.5 KW MOTOR

Nominal Output Rev/Min	Output Torque Nm	Service Factor	Unit Selection	Overhung Load N
300	230	1.71	783A0256	2661
233	297	1.57	784A0556	4640
214	322	1.75	785A0556	6800
213	327	1.57	783A0456	2415
208	333	3.51	786A0556	8720
190	366	1.48	783A0556	2283
169	409	1.36	783A0756	2115
166	421	1.36	784A0756	4675
155	448	1.75	785A0756	7130
148	470	1.30	784A0856	4647
147	473	3.40	786A0756	9420
143	484	1.17	**785A0565**	7190
139	499	2.34	**786A0565**	9501
138	503	1.75	785A0856	7220
133	521	1.11	783A0856	1642
132	529	1.23	784A1056	4588
132	523	3.23	786A0856	9620
125	554	1.75	785A1056	7272
119	585	3.04	786A1056	9820
118	591	1.00	783A1056	1310
104	671	1.09	784A1156	4372
103	672	1.17	**785A0765**	7340
99	704	0.86	783A1156	732
98	708	2.34	**786A0765**	10170
96	725	1.60	785A1156	7351
92	755	1.17	**785A0865**	7340
92	757	2.61	786A1156	10237
91	761	1.02	784A1256	4186
89	784	2.34	**786A0865**	10297
84	831	1.17	**785A1065**	7320
84	824	1.48	785A1256	7330
82	848	2.44	786A1256	10437
80	877	2.22	**786A1065**	10439
77	908	0.92	784A1456	3830
69	1005	1.31	785A1456	7225
67	1035	2.13	786A1456	10618
64	1089	1.17	**785A1165**	7090
63	1098	1.23	785A1556	7070
62	1134	1.91	**786A1165**	10687
59	1174	1.93	786A1556	10727
56	1238	1.08	**785A1265**	6880
55	1263	1.10	785A1656	6864
55	1270	1.78	**786A1265**	10742
51	1368	1.75	786A1656	10788
51	1364	3.11	787A1756	29888
48	1431	1.02	785A1756	6574
47	1479	3.94	**788A1465**	43300
46	1499	0.96	**785A1465**	6410
46	1512	1.63	786A1756	10817
46	1514	2.80	787A1856	29876

Series F Gearboxes : Motorised selection

Nominal Output Rev/Min	Output Torque Nm	Service Factor	Unit Selection	Overhung Load N
45	1561	1.55	**786A1465**	10735
44	1584	0.93	785A1856	6290
42	1644	0.90	**785A1565**	6100
42	1660	1.49	786A1856	10745
42	1643	3.77	**788A1565**	43300
41	1694	3.81	788A1956	43300
40	1756	2.45	787A1956	29863
39	1753	1.41	**786A1565**	10678
38	1815	0.84	785A1956	5790
37	1889	0.80	**785A1665**	5540
37	1871	1.37	786A1956	10645
37	1859	3.48	**788A1665**	43300
37	1879	3.56	788A2056	43300
36	1947	2.21	787A2056	29833
34	2039	1.28	**786A1665**	10503
34	2043	2.07	**787A1765**	29832
34	2031	3.15	**788A1765**	43300
33	2116	1.24	786A2056	10485
33	2134	1.99	787A2156	29827
33	2133	3.00	788A2156	43300
31	2258	1.16	**786A1765**	10302
31	2264	1.87	**787A1865**	29836
31	2252	2.84	**788A1865**	43300
29	2355	1.80	787A2256	29836
28	2474	1.04	**786A1865**	10000
28	2461	2.60	788A2256	43300
27	2554	1.05	786A2256	10000
27	2539	2.85	**788A1965**	43300
26	2622	1.64	**787A1965**	29789
26	2678	2.71	788A2356	43300
25	2805	0.97	**786A1965**	9630
25	2762	1.56	787A2356	29812
24	2908	1.48	**787A2065**	29787
24	2832	2.56	**788A2065**	43300
23	2978	0.92	786A2356	9440
23	3049	1.41	787A2456	29800
22	3160	0.88	**786A2065**	9090
22	3195	1.33	**787A2165**	29787
22	3204	2.00	**788A2165**	43300
22	3089	2.35	788A2456	43300
21	3271	0.86	786A2456	9000
21	3233	1.11	787A2556	29827
21	3305	1.87	788A2556	43300
20	3528	1.20	**787A2265**	29720
19	3629	0.99	787A2656	29748
19	3565	1.57	788A2656	43300
19	3701	1.73	**788A2265**	43300
19	3829	2.02	**789A2365**	49100
17	4170	1.03	787A2756	29672
17	4117	1.05	**787A2365**	29700
17	4150	1.75	788A2756	43300
17	4036	1.80	**788A2365**	43300
16	4361	2.02	**789A2465**	50200
16	4473	2.26	789A3656	56000
15	4678	0.92	787A2856	29700
15	4550	0.95	**787A2465**	29700
15	4623	1.57	**788A2465**	43300
15	4474	1.57	788A2856	43300
14	4838	0.82	**787A2565**	29700
14	4976	1.24	**788A2565**	43300
14	4870	1.31	788A3756	43200
14	5095	2.08	789A3756	56000
13	5338	1.05	**788A2665**	43300
13	5411	1.18	788A3856	43200
13	5480	1.85	789A3856	56000
11	6246	1.16	**788A2765**	43300
11	6109	1.18	788A3956	43200
11	6242	1.70	789A3956	56000
10	6709	1.05	**788A2865**	43300
10	6788	1.07	788A4056	43200
10	6954	1.46	789A4056	56000
10	6910	2.37	790A4056	62200
9.6	7463	2.19	790A4156	62200
9.0	7921	1.34	789A4156	56000
8.9	7717	0.83	788A4156	43200
8.1	8796	1.15	789A4256	56000
8.0	8954	1.83	790A4256	62200
7.4	9671	1.69	790A4356	62200

Nominal Output Rev/Min	Output Torque Nm	Service Factor	Unit Selection	Overhung Load N
7.1	10020	1.06	789A4356	56000
6.4	11138	0.91	789A4456	56000
6.3	11338	1.45	790A4456	62200
5.8	12246	1.34	790A4556	62200
5.6	12688	0.84	789A4556	56000
5.1	14094	1.17	790A4656	62200
4.7	15223	1.08	790A4756	62200
4.2	16949	0.97	**790A4465**	62200
3.9	18306	0.90	**790A4565**	62200

11.0 KW MOTOR

Nominal Output Rev/Min	Output Torque Nm	Service Factor	Unit Selection	Overhung Load N
216	470	1.20	785A0566	6030
210	486	2.41	786A0566	8130
156	652	1.20	785A0766	6061
148	689	2.33	786A0766	8582
148	690	3.72	**787A0467**	29900
139	733	1.20	785A0866	6020
139	732	1.60	**786A0567**	8628
139	737	3.59	**787A0567**	29900
133	762	2.22	786A0866	8689
129	794	3.76	787A0966	29900
126	807	1.20	785A1066	5955
124	827	3.41	**787A0667**	29900
120	852	2.09	786A1066	8784
115	888	3.53	787A1066	29900
110	930	3.21	**787A0767**	29900
100	1023	3.31	787A1166	29900
98	1038	1.60	**786A0767**	8894
96	1056	1.10	785A1166	5633
96	1065	3.02	**787A0867**	29900
93	1103	1.79	786A1166	8902
89	1151	1.60	**786A0867**	8893
89	1144	3.10	787A1266	29900
85	1200	1.02	785A1266	5377
85	1198	2.83	**787A0967**	29900
84	1219	3.76	**788A0967**	43200
83	1235	1.68	786A1266	8927
83	1228	2.94	787A1366	29900
81	1269	3.87	788A1366	43200
80	1286	1.52	**786A1067**	8878
78	1314	3.59	**788A1067**	43200
77	1337	2.65	**787A1067**	29900
73	1406	2.71	787A1466	29900
71	1436	3.59	788A1466	43200
70	1464	0.90	785A1466	4833
67	1508	1.46	786A1466	8784
67	1529	3.35	**788A1167**	43200
66	1542	2.49	**787A1167**	29900
64	1599	0.84	785A1566	4480
64	1587	2.56	787A1566	29900
64	1594	3.43	788A1566	43200
62	1663	1.30	**786A1167**	8675
62	1653	3.20	**788A1267**	43200
60	1710	1.33	786A1566	8654
59	1722	2.33	**787A1267**	29900
56	1812	2.36	787A1666	29900
56	1804	3.17	788A1666	43200
55	1863	1.21	**786A1267**	8485
55	1855	2.20	**787A1367**	29900
53	1919	2.90	**788A1367**	43200
52	1969	2.96	788A1766	43200
51	1993	1.20	786A1666	8376
51	1988	2.13	787A1766	29867
48	2117	2.00	**787A1467**	29900
47	2169	2.69	**788A1467**	43200
47	2185	2.76	788A1866	43200
46	2202	1.12	786A1766	8135
46	2205	1.92	787A1866	29834
45	2290	1.06	**786A1467**	7970
43	2393	1.80	**787A1567**	29900
42	2419	1.03	786A1866	7824
42	2410	2.57	**788A1567**	43200
41	2476	2.61	788A1966	43200
40	2571	0.96	**786A1567**	7550

Nominal Output Rev/Min	Output Torque Nm	Service Factor	Unit Selection	Overhung Load N
40	2558	1.68	787A1966	29800
37	2725	0.94	786A1966	7335
37	2727	1.58	**787A1667**	29900
37	2727	2.38	**788A1667**	43200
37	2746	2.44	788A2066	43200
36	2836	1.52	787A2066	29765
34	2990	0.87	**786A1667**	6850
34	2997	1.41	**787A1767**	29764
34	2980	2.15	**788A1767**	43200
33	3082	0.85	786A2066	6740
33	3108	1.36	787A2166	29755
33	3118	2.05	788A2166	43200
32	3304	2.41	789A3066	38900
31	3320	1.28	**787A1867**	29772
31	3303	1.94	**788A1867**	43200
30	3431	1.24	787A2266	29772
28	3597	1.78	788A2266	43200
28	3731	2.02	789A2366	41400
28	3763	2.41	789A3166	39500
27	3724	1.95	**788A1967**	43200
26	3846	1.12	**787A1967**	29700
26	3915	1.85	788A2366	43200
26	4033	2.13	789A3266	41500
25	4024	1.07	787A2366	29725
25	4249	2.02	789A2466	42200
24	4265	1.01	**787A2067**	29700
24	4158	1.75	**788A2067**	43200
24	4314	2.46	**789A2167**	45300
23	4442	0.97	787A2466	29722
23	4595	2.13	789A3366	42100
22	4686	0.90	**787A2167**	29700
22	4700	1.36	**788A2167**	43200
22	4515	1.61	788A2466	43200
21	4831	1.28	788A2566	43200
20	5174	0.82	**787A2267**	29600
20	5235	1.80	789A3466	45200
19	5211	1.08	788A2666	43200
19	5429	1.18	**788A2267**	43200
19	5556	1.78	**789A2267**	45900
18	5615	1.37	**789A2367**	49100
18	5962	1.78	789A3566	46000
18	5821	1.96	**790A2367**	56300
17	6066	1.20	788A2766	43200
17	5920	1.22	**788A2367**	43200
17	6288	1.96	**790A2467**	57300
16	6540	1.08	788A2866	43200
16	6396	1.37	**789A2467**	50200
16	6561	1.54	789A3666	48700
16	6769	2.41	790A3666	54000
15	6780	1.07	**788A2467**	43200
14	7299	0.85	**788A2567**	43200
14	7473	1.42	789A3766	50600
14	7311	2.22	790A3766	56100
13	8037	1.26	789A3866	53000
13	8360	1.95	790A3866	59200
12	9029	1.80	790A3966	61400
11	9155	1.15	789A3966	55100
10	10199	0.99	789A4066	56000
10	10134	1.62	790A4066	62200
9.6	10945	1.49	790A4166	62200
9.0	11617	0.91	789A4166	56000
8.0	13133	1.25	790A4266	62200
7.4	14185	1.15	790A4366	62200
6.3	16630	0.99	790A4466	62200
5.8	17961	0.91	790A4566	62200
5.1	20672	0.80	790A4666	62200

Series F Gearboxes : Motorised selection

Bold print indicates a 6 pole motor is used

Double reduction

Triple reduction

15.0 KW MOTOR

Nominal Output Rev/Min	Output Torque Nm	Service Factor	Unit Selection	Overhung Load N
222	623	3.64	787A0468	29900
210	662	1.77	786A0568	7457
209	666	3.51	787A0568	29900
191	729	3.04	**787A0274**	29900
190	733	3.49	**788A0274**	43500
186	747	3.33	787A0668	29900
166	840	3.14	787A0768	29900
156	890	0.88	785A0768	4840
151	922	3.49	**788A0474**	43500
148	940	1.71	786A0768	7626
148	942	2.73	**787A0474**	29888
144	964	2.95	787A0868	29889
139	1000	0.88	785A0868	4650
139	1006	2.63	**787A0574**	29888
136	1025	3.49	**788A0574**	43500
133	1040	1.62	786A0868	7626
129	1083	2.76	787A0968	29889
127	1094	3.69	788A0968	43200
126	1100	0.88	785A1068	4450
125	1115	3.39	**788A0674**	43500
124	1128	2.50	**787A0674**	29888
120	1163	1.53	786A1068	7601
118	1183	3.52	788A1068	43200
115	1211	2.59	787A1068	29889
110	1268	2.36	**787A0774**	29888
110	1270	3.18	**788A0774**	43500
101	1377	3.29	788A1168	43200
100	1395	2.43	787A1168	29876
99	1402	3.04	**788A0874**	43500
96	1440	0.81	785A1168	3670
96	1452	2.22	**787A0874**	29885
94	1486	3.14	788A1268	43200
93	1504	1.32	786A1168	7376
89	1560	2.28	787A1268	29885
85	1633	2.07	**787A0974**	29870
84	1654	2.77	**788A0974**	43500
83	1685	1.23	786A1268	7201
83	1675	2.15	787A1368	29870
81	1725	2.85	788A1368	43200
78	1762	2.65	**788A1074**	43500
77	1823	1.95	**787A1074**	29880
73	1917	1.99	787A1468	29869
71	1952	2.64	788A1468	43200
67	2057	1.07	786A1468	6688
67	2075	2.47	**788A1174**	43500
66	2103	1.83	**787A1174**	29860
64	2165	1.88	787A1568	29860
64	2167	2.52	788A1568	43200
62	2243	2.36	**788A1274**	43400
60	2332	0.97	786A1568	6285
59	2349	1.71	**787A1274**	29860
56	2471	1.73	787A1668	29840
56	2452	2.34	788A1668	43200
55	2529	1.62	**787A1374**	29836
53	2603	2.14	**788A1374**	43400
52	2675	2.17	788A1768	43200
51	2717	0.88	786A1668	5620
51	2710	1.56	787A1768	29842
48	2887	1.47	**787A1474**	29827
47	2943	1.98	**788A1474**	43400
47	2969	2.03	788A1868	43200
46	3003	0.82	786A1768	5070
46	3007	1.41	787A1868	29785
43	3264	1.32	**787A1574**	29827
42	3270	1.89	**788A1574**	43400
41	3364	1.92	788A1968	43200
40	3489	1.24	787A1968	29727
37	3719	1.16	**787A1674**	29805
37	3699	1.75	**788A1674**	43400
37	3732	1.79	788A2068	43200
36	3867	1.11	787A2068	29687
34	4087	1.04	**787A1774**	29687
34	4042	1.58	**788A1774**	43200
33	4239	1.00	787A2168	29672
33	4237	1.51	788A2168	43200
32	4489	1.77	**789A3074**	38900
32	4434	1.92	789A2168	38000
31	4528	0.94	**787A1874**	29700
31	4481	1.43	**788A1874**	43200
30	4678	0.91	787A2268	29700
28	4889	1.31	788A2268	43200
28	5105	1.49	789A2368	41400
28	5114	1.77	**789A3174**	39500
28	5051	1.92	789A2268	38500
27	5052	1.43	**788A1974**	43200
27	5292	2.12	790A2368	47400
26	5244	0.82	**787A1974**	29600
26	5320	1.36	788A2368	43200
26	5481	1.56	**789A3274**	41500
25	5815	1.49	789A2468	42200
25	5375	2.12	790A2468	48100
24	5635	1.29	**788A2074**	43200
24	5882	1.80	**789A2074**	40500
23	6244	1.56	**789A3374**	42100
22	6376	1.00	**788A2174**	43200
22	6136	1.18	788A2468	43200
22	6652	1.30	**789A2174**	45300
22	6461	2.18	**790A2174**	48900
21	6565	0.94	788A2568	43200
21	6979	2.18	**790A2274**	49600
20	7114	1.32	**789A3474**	45200
20	7105	2.28	**790A3474**	48200
19	7365	0.87	**788A2274**	43200
19	7657	1.01	**789A2374**	49100
19	7576	1.30	**789A2274**	46100
19	7674	2.11	**790A3574**	50200
18	8103	1.31	**789A3574**	46000
18	7938	1.43	**790A2374**	56300
17	8244	0.88	788A2768	43100
17	8032	0.90	**788A2374**	43200
17	8594	1.43	**790A2474**	57300
16	8722	1.01	**789A2474**	50200
16	8916	1.14	**789A3674**	48700
16	9199	1.77	**790A3674**	54000
14	10155	1.05	**789A3774**	50600
14	9935	1.63	**790A3774**	56100
13	10922	0.93	**789A3874**	53000
13	11361	1.44	**790A3874**	59200
12	12442	0.85	**789A3974**	55100
12	12270	1.33	**790A3974**	61400
10	13772	1.19	**790A4074**	62200
9.6	14874	1.10	**790A4174**	62200
8.0	17847	0.92	**790A4274**	62200
7.4	19276	0.85	**790A4374**	62200

18.5 KW MOTOR

Nominal Output Rev/Min	Output Torque Nm	Service Factor	Unit Selection	Overhung Load N
287	597	3.28	787A0276	29785
222	769	2.95	787A0476	29900
209	822	2.85	787A0576	29891
205	839	3.81	788A0576	43500
194	885	2.51	**787A0275**	29900
190	904	2.83	**788A0275**	43500
188	913	3.66	788A0676	43500
186	922	2.70	787A0676	29874
166	1036	2.55	787A0776	29840
166	1036	3.43	788A0776	43500
151	1138	2.83	**788A0475**	43500
150	1144	2.25	**787A0475**	29877
149	1146	3.29	788A0876	43500
144	1190	2.39	787A0876	29879
141	1222	2.17	**787A0575**	29877
136	1265	2.83	**788A0575**	43500
129	1336	2.24	787A0976	29879
127	1349	2.99	788A0976	43500
126	1370	2.06	**787A0675**	29877
125	1375	2.75	**788A0675**	43500
118	1459	2.86	788A1076	43500
115	1494	2.10	787A1076	29879
112	1540	1.94	**787A0775**	29877
110	1567	2.58	**788A0775**	43500
101	1698	2.67	788A1176	43500
100	1720	1.97	787A1176	29855
99	1729	2.47	**788A0875**	43500
97	1764	1.82	**787A0875**	29872
94	1833	2.55	788A1276	43400
89	1924	1.85	787A1276	29872
87	1984	1.71	**787A0975**	29844
84	2040	2.24	**788A0975**	43500
83	2066	1.75	787A1376	29844
81	2127	2.31	788A1376	43400
78	2214	1.60	**787A1075**	29862
78	2198	2.15	**788A1075**	43500
73	2364	1.61	787A1476	29842
71	2407	2.14	788A1476	43400
67	2554	1.50	**787A1175**	29825
67	2559	2.00	**788A1175**	43500
64	2670	1.52	787A1576	29825
64	2672	2.05	788A1576	43400
62	2767	1.91	**788A1275**	43400
60	2853	1.41	**787A1275**	29825
56	3072	1.33	**787A1375**	29781
56	3047	1.40	787A1676	29787
56	3025	1.89	788A1676	43400
53	3211	1.73	**788A1375**	43400
52	3300	1.76	788A1776	43300
51	3343	1.27	787A1776	29821
49	3506	1.21	**787A1475**	29763
47	3630	1.61	**788A1475**	43400
47	3662	1.65	788A1876	43300
46	3709	1.14	787A1876	29742
43	3964	1.09	**787A1575**	29763
42	4033	1.53	**788A1575**	43400
42	4202	2.41	789A1976	32100
41	4150	1.56	788A1976	43300
40	4303	1.00	787A1976	29663
38	4518	0.95	**787A1675**	29723
37	4563	1.42	**788A1675**	43300
37	4603	1.45	788A2076	43300
37	4787	2.22	789A2076	33300
36	4770	0.90	787A2076	29619
35	4964	0.85	**787A1775**	29619
34	4986	1.28	**788A1775**	43300
33	5228	0.81	787A2176	29600
33	5226	1.22	788A2176	43200
33	5413	1.57	789A2176	38000
32	5481	1.45	789A3076	38900
31	5527	1.16	**788A1875**	43300
29	6166	1.57	789A2276	38500
28	6030	1.06	788A2276	43200
28	6232	1.22	789A2376	41400
28	6233	1.45	789A3176	39500
27	6232	1.16	**788A1975**	43200
27	6460	1.74	790A2376	47400

Series F Gearboxes : Motorised selection

Nominal Output Rev/Min	Output Torque Nm	Service Factor	Unit Selection	Overhung Load N
26	6561	1.10	788A2376	43100
26	6691	1.28	789A3276	41500
26	6898	2.33	**790A2075**	44400
25	7098	1.22	789A2476	42200
25	7144	1.49	**789A2075**	40500
25	6978	1.74	790A2476	48100
25	7003	2.31	790A3276	43800
24	6949	1.04	**788A2075**	43200
23	7622	1.28	789A3376	42100
23	7847	1.80	**790A2175**	48900
23	7565	2.13	790A3376	45600
22	7864	0.81	**788A2175**	43100
22	7568	0.96	788A2476	43100
22	8079	1.07	**789A2175**	45300
21	8477	1.80	**790A2275**	49600
20	8685	1.08	789A3476	45200
20	8674	1.87	790A3476	48200
19	9300	0.83	**789A2375**	49100
19	9201	1.07	**789A2275**	46100
19	9369	1.73	790A3576	50200
18	9891	1.07	789A3576	46000
18	9641	1.18	**790A2375**	56300
17	10593	0.83	**789A2475**	50200
17	10414	1.18	**790A2475**	57300
16	11884	0.93	789A3676	48700
16	11229	1.45	790A3676	54000
15	12128	1.34	790A3776	56100
14	12397	0.86	789A3776	50600
13	13868	1.18	790A3876	59200
12	14979	1.09	790A3976	61400
11	16812	0.97	790A4076	62200
9.7	18518	0.90	790A4176	62200

22.0 KW MOTOR

Nominal Output Rev/Min	Output Torque Nm	Service Factor	Unit Selection	Overhung Load N
287	710	2.76	787A0278	29670
287	712	3.59	788A0278	43500
228	893	3.38	788A0478	43500
222	915	2.48	787A0478	29900
209	977	2.39	787A0578	29882
205	995	3.21	788A0578	43500
193	1058	2.10	**787A0284**	29900
190	1076	2.38	**788A0284**	43500
188	1082	3.09	788A0678	43500
186	1096	2.27	787A0678	29848
166	1232	2.14	787A0778	29780
166	1228	2.90	788A0778	43500
151	1353	2.38	**788A0484**	43500
149	1367	1.88	**787A0484**	29867
149	1359	2.77	788A0878	43500
144	1415	2.01	787A0878	29870
140	1460	1.81	**787A0584**	29867
136	1504	2.38	**788A0584**	43500
129	1589	1.88	787A0978	29870
127	1599	2.53	788A0978	43500
125	1638	1.72	**787A0684**	29867
125	1636	2.31	**788A0684**	43500
118	1729	2.41	788A1078	43500
115	1777	1.77	787A1078	29870
111	1841	1.62	**787A0784**	29867
110	1863	2.17	**788A0784**	43500
101	2013	2.25	788A1178	43500
100	2046	1.66	787A1178	29835
99	2056	2.08	**788A0884**	43500
97	2109	1.53	**787A0884**	29859
94	2172	2.15	788A1278	43400
89	2288	1.55	787A1278	29859
86	2372	1.43	**787A0984**	29818
84	2426	1.89	**788A0984**	43500
83	2457	1.47	787A1378	29818
81	2521	1.95	788A1378	43400
78	2614	1.80	**788A1084**	43500
77	2647	1.34	**787A1084**	29845
73	2812	1.35	787A1478	29815
71	2853	1.80	788A1478	43400
67	3053	1.26	**787A1184**	29790
67	3043	1.69	**788A1184**	43500
64	3175	1.28	787A1578	29790
64	3167	1.73	788A1578	43400
62	3290	1.61	**788A1284**	43400
60	3410	1.18	**787A1284**	29790
56	3672	1.11	**787A1384**	29726
56	3624	1.18	787A1678	29735
56	3585	1.60	788A1678	43400
53	3818	1.46	**788A1384**	43400
52	3911	1.49	788A1778	43300
52	4059	2.49	789A1778	29100
51	3976	1.07	787A1778	29800
49	4191	1.01	**787A1484**	29700
47	4317	1.35	**788A1484**	43400
47	4340	1.39	788A1878	43300
46	4411	0.96	787A1878	29700
45	4622	2.21	789A1878	30700
43	4739	0.91	**787A1584**	29700
42	4796	1.29	**788A1584**	43400
42	4997	2.03	789A1978	32100
41	4918	1.31	788A1978	43200
40	5117	0.84	787A1978	29600
37	5426	1.19	**788A1684**	43300
37	5455	1.23	788A2078	43200
37	5693	1.87	789A2078	33300
34	5929	1.08	**788A1784**	43300
34	6253	2.18	790A2178	40900
33	6193	1.03	788A2178	43200
33	6437	1.32	789A2178	38000
33	6426	2.47	790A3078	39100
32	6517	1.22	789A3078	38900
31	6573	0.97	**788A1884**	43300
31	6755	2.18	790A2278	41300
30	6940	2.31	790A3178	40500
29	7332	1.32	789A2278	38500
28	7146	0.90	788A2278	43200

Nominal Output Rev/Min	Output Torque Nm	Service Factor	Unit Selection	Overhung Load N
28	7411	1.03	789A2378	41400
28	7424	1.22	789A3178	39500
27	7411	0.98	**788A1984**	43200
27	7682	1.46	790A2378	47400
26	7776	0.93	788A2378	43100
26	7957	1.08	789A3278	41500
25	8441	1.03	789A2478	42200
25	8539	1.24	**789A2084**	40500
25	8298	1.46	790A2478	48100
25	8328	1.94	790A3278	43800
25	8245	1.95	**790A2084**	44400
24	8264	0.88	**788A2084**	43100
23	9064	1.08	789A3378	42100
23	8996	1.79	790A3378	45600
22	8969	0.81	788A2478	43100
22	9656	0.90	**789A2184**	45300
22	9379	1.50	**790A2184**	48900
21	10132	1.50	**790A2284**	49600
20	10328	0.91	789A3478	45200
20	10315	1.57	790A3478	48200
19	10998	0.90	**789A2284**	46100
19	11141	1.45	790A3578	50200
18	11723	0.90	789A3578	46000
18	11523	0.99	**790A2384**	56300
17	12447	0.99	**790A2484**	57300
16	13353	1.12	790A3678	54000
15	14423	1.13	790A3778	56100
13	16492	0.99	790A3878	59200
12	17813	0.91	790A3978	61400
11	19992	0.82	790A4078	62200

Series F Gearboxes : Motorised selection

Bold print indicates a 6 pole motor is used
Double reduction
Triple reduction

30.0 KW MOTOR

Nominal Output Rev/Min	Output Torque Nm	Service Factor	Unit Selection	Overhung Load N
289	961	2.04	787A0288	29408
287	968	2.64	788A0288	43500
228	1214	2.49	788A0488	43500
224	1239	1.83	787A0488	29900
210	1323	1.77	787A0588	29863
205	1352	2.37	788A0588	43500
194	1436	1.55	**787A0291**	29900
190	1459	1.75	**788A0291**	43500
188	1470	2.27	788A0688	43500
187	1485	1.68	787A0688	29790
167	1669	1.58	787A0788	29643
166	1669	2.13	788A0788	43500
151	1836	1.75	**788A0491**	43500
150	1855	1.39	**787A0491**	29844
149	1847	2.04	788A0888	43500
145	1916	1.49	787A0888	29848
141	1981	1.34	**787A0591**	29844
136	2041	1.75	**788A0591**	43500
130	2152	1.39	787A0988	29848
127	2173	1.86	788A0988	43500
126	2222	1.27	**787A0691**	29844
125	2219	1.70	**788A0691**	43500
118	2350	1.77	788A1088	43500
116	2407	1.30	787A1088	29848
112	2497	1.20	**787A0791**	29844
110	2528	1.60	**788A0791**	43500
101	2735	1.66	788A1188	43500
100	2771	1.22	787A1188	29788
99	2790	1.53	**788A0891**	43500
97	2861	1.13	**787A0891**	29829
94	2952	1.58	788A1288	43400
90	3098	1.15	787A1288	29829
87	3218	1.05	**787A0991**	29759
84	3327	1.08	787A1388	29759
84	3291	1.39	**788A0991**	43500
81	3426	1.43	788A1388	43400
78	3591	0.99	**787A1091**	29805
78	3547	1.33	**788A1091**	43500
73	3808	1.00	787A1488	29753
72	3974	2.26	789A1488	26100
71	3877	1.33	788A1488	43300
67	4143	0.93	**787A1191**	29710
67	4128	1.24	**788A1191**	43500
66	4355	2.22	789A1588	26600
65	4301	0.95	787A1588	29710
64	4304	1.27	788A1588	43300
62	4464	1.18	**788A1291**	43400
60	4627	0.87	**787A1291**	29710
58	4961	1.92	789A1688	28300
57	4909	0.87	787A1688	29615
56	4982	0.82	**787A1391**	29600
56	4872	1.18	788A1688	43300
53	5180	1.07	**788A1391**	43400
52	5315	1.09	788A1788	43200
52	5516	1.83	789A1788	29100
47	5857	1.00	**788A1491**	43400
47	5898	1.02	788A1888	43200
46	6282	1.63	789A1888	30700
42	6506	0.95	**788A1591**	43400
42	6791	1.49	789A1988	32100
41	6684	0.97	788A1988	43200
41	6917	2.24	790A1988	35200
38	7470	2.14	790A2088	36300
37	7361	0.88	**788A1691**	43300
37	7414	0.90	788A2088	43100
37	7736	1.37	789A2088	33300
34	8498	1.61	790A2188	40900
33	8748	0.97	789A2188	38000
33	8733	1.82	790A3088	39100
31	9180	1.61	790A2288	41300
30	9432	1.70	790A3188	40500
29	9964	0.97	789A2288	38300
27	10440	1.08	790A2388	47400
26	11187	1.44	**790A2091**	44400
25	11585	0.92	**789A2091**	40500
25	11277	1.08	790A2488	48100
25	11318	1.43	790A3288	43800
23	12725	1.11	**790A2191**	48900
23	12225	1.32	790A3388	45600
21	13746	1.11	**790A2291**	49600
20	14018	1.16	790A3488	48200
19	15141	1.07	790A3588	50200
16	18148	0.90	790A3688	54000
15	19600	0.83	790A3788	56100

37.0 KW MOTOR

Nominal Output Rev/Min	Output Torque Nm	Service Factor	Unit Selection	Overhung Load N
290	1182	1.66	787A0294	29179
287	1190	2.15	788A0294	43500
228	1492	2.02	788A0494	43500
225	1523	1.49	787A0494	29900
211	1627	1.44	787A0594	29846
205	1662	1.92	788A0594	43500
188	1825	1.36	787A0694	29739
188	1807	1.85	788A0694	43500
167	2051	1.29	787A0794	29524
166	2052	1.73	788A0794	43500
149	2270	1.66	788A0894	43500
146	2355	1.21	787A0894	29829
130	2646	1.13	787A0994	29829
127	2671	1.51	788A0994	43500
118	2889	1.44	788A1094	43500
116	2958	1.06	787A1094	29829
101	3406	1.00	787A1194	29747
101	3362	1.35	788A1194	43500
95	3715	2.22	789A1294	23700
94	3629	1.29	788A1294	43400
90	3808	0.93	787A1294	29803
84	4090	0.88	787A1394	29707
82	4288	2.11	789A1394	24600
81	4212	1.17	788A1394	43400
74	4681	0.81	787A1494	29700
72	4885	1.84	789A1494	26100
71	4766	1.09	788A1494	43400
66	5353	1.81	789A1594	26600
64	5291	1.03	788A1594	43400
58	6098	1.56	789A1694	28300
56	5988	0.96	788A1694	43300
52	6533	0.89	788A1794	43200
52	6761	1.49	789A1794	29100
51	6905	2.20	790A1794	28100
47	7250	0.83	788A1894	43200
47	7456	2.13	790A1894	28300
46	7721	1.32	789A1894	30700
42	8347	1.21	789A1994	32100
42	8502	1.82	790A1994	35200
38	9182	1.74	790A2094	36300
37	9509	1.12	789A2094	33300
34	10445	1.31	790A2194	40900
33	10734	1.48	790A3094	39100
31	11283	1.31	790A2294	41300
30	11594	1.38	790A3194	40500
27	12833	0.88	790A2394	47400
26	13797	1.17	**790A2092**	44400
25	13862	0.88	790A2494	48100
25	13912	1.16	790A3294	43800
24	15027	1.07	790A3394	45600
23	15694	0.90	**790A2192**	48900
21	16954	0.90	**790A2292**	49600
21	17321	0.94	790A3494	48200
19	18611	0.87	790A3594	50200

45.0 KW MOTOR

Nominal Output Rev/Min	Output Torque Nm	Service Factor	Unit Selection	Overhung Load N
290	1437	1.36	787A0295	28917
287	1448	1.77	788A0295	43500
228	1815	1.66	788A0495	43500
225	1852	1.23	787A0495	29900
211	1979	1.18	787A0595	29826
205	2022	1.58	788A0595	43500
188	2220	1.12	787A0695	29680
188	2198	1.52	788A0695	43500
167	2495	1.06	787A0795	29387
166	2495	1.43	788A0795	43500
149	2761	1.37	788A0895	43500
148	2895	2.50	789A0895	20300
146	2865	0.99	787A0895	29808
131	3290	2.37	789A0995	21000
130	3218	0.93	787A0995	29808
127	3249	1.24	788A0995	43500
118	3513	1.19	788A1095	43500
116	3598	0.87	787A1095	29808
115	3746	2.08	789A1095	22200
108	3966	2.09	789A1195	22400
101	4142	0.82	787A1195	29700
101	4089	1.11	788A1195	43500
95	4518	1.83	789A1295	23700
94	4414	1.06	788A1295	43400
82	5215	1.74	789A1395	24600
81	5122	0.96	788A1395	43400
72	5941	1.51	789A1495	26100
71	5796	0.89	788A1495	43400
66	6510	1.49	789A1595	26600
65	6632	2.20	790A1595	22400
64	6435	0.85	788A1595	43400
60	7163	2.20	790A1695	19600
58	7416	1.28	789A1695	28300
52	8237	1.23	789A1795	29100
51	8398	1.81	790A1795	28100
47	9068	1.75	790A1895	28300
46	9391	1.09	789A1895	30700
42	10151	1.00	789A1995	32100
42	10340	1.50	790A1995	35200
38	11168	1.43	790A2095	36300
37	11566	0.92	789A2095	33300
34	12704	1.07	790A2195	40900
33	13055	1.22	790A3095	39100
31	13723	1.07	790A2295	41300
30	14100	1.14	790A3195	40500
26	16780	0.96	790A2093	44400
25	16920	0.96	790A3295	43800
24	18276	0.88	790A3395	45600

Series F Gearboxes : Motorised selection

55.0 KW MOTOR

Nominal Output Rev/Min	Output Torque Nm	Service Factor	Unit Selection	Overhung Load N
327	1608	2.36	789A0196	17900
320	1643	2.50	790A0196	21800
296	1774	2.50	790A0296	22200
287	1831	2.36	789A0296	18100
268	1963	2.37	789A0396	18400
235	2236	2.37	789A0496	18600
206	2550	2.36	789A0596	18900
187	2804	2.50	790A0696	23900
180	2910	2.35	789A0696	18900
169	3105	2.30	789A0796	19300
161	3262	2.50	790A0796	24200
148	3538	2.04	789A0896	20300
131	4021	1.94	789A0996	21000
128	4099	2.50	790A0996	24600
119	4429	2.50	790A1096	24500
115	4578	1.71	789A1096	22200
108	4848	1.71	789A1196	22400
107	4926	2.43	790A1196	21400
99	5320	2.43	790A1296	19000
95	5522	1.50	789A1296	23700
83	6307	2.20	790A1396	17900
82	6374	1.42	789A1396	24600
77	6811	2.20	790A1496	15100
72	7261	1.23	789A1496	26100
66	7957	1.22	789A1596	26600
65	8106	1.80	790A1596	22400
60	8755	1.80	790A1696	19600
58	9064	1.05	789A1696	28300
52	10079	1.00	789A1796	29100
51	10264	1.48	790A1796	28100
47	11083	1.43	790A1896	28300
46	11477	0.89	789A1896	30700
42	12407	0.82	789A1996	32100
42	12638	1.22	790A1996	35200
38	13649	1.17	790A2096	36300
34	15527	0.88	790A2196	40900
31	16773	0.88	790A2296	41300

75.0 KW MOTOR

Nominal Output Rev/Min	Output Torque Nm	Service Factor	Unit Selection	Overhung Load N
320	2236	1.84	790A0198	21800
297	2415	1.84	790A0298	22200
259	2767	1.84	790A0398	22700
240	2990	1.84	790A0498	23100
203	3531	1.84	790A0598	23600
188	3815	1.84	790A0698	23900
161	4439	1.84	790A0798	24200
149	4791	1.84	790A0898	24500
128	5578	1.84	790A0998	24600
119	6028	1.84	790A1098	24500
107	6704	1.79	790A1198	21400
99	7240	1.79	790A1298	19000
83	8582	1.62	790A1398	17900
77	9268	1.61	790A1498	15100
65	11031	1.33	790A1598	22400
60	11915	1.32	790A1698	19600
51	13968	1.09	790A1798	28100
47	15083	1.05	790A1898	28300
42	17199	0.90	790A1998	35200
39	18575	0.86	790A2098	36300

90.0 KW MOTOR

Nominal Output Rev/Min	Output Torque Nm	Service Factor	Unit Selection	Overhung Load N
321	2682	1.53	790A0199	21800
297	2896	1.53	790A0299	22200
259	3319	1.53	790A0399	22700
240	3585	1.53	790A0499	23100
203	4234	1.53	790A0599	23600
188	4576	1.53	790A0699	23900
161	5323	1.53	790A0799	24200
150	5745	1.53	790A0899	24500
128	6690	1.53	790A0999	24600
119	7228	1.53	790A1099	24500
107	8039	1.49	790A1199	21400
99	8682	1.49	790A1299	19000
84	10292	1.35	790A1399	17900
77	11114	1.35	790A1499	15100
65	13228	1.11	790A1599	22400
60	14288	1.10	790A1699	19600
51	16750	0.91	790A1799	28100
48	18088	0.88	790A1899	28300

110.0 KW MOTOR

Nominal Output Rev/Min	Output Torque Nm	Service Factor	Unit Selection	Overhung Load N
320	2682	1.25	790A0173	21800
297	2896	1.25	790A0273	22200
259	3319	1.25	790A0373	22700
240	3585	1.25	790A0473	23100
203	4234	1.25	790A0573	23600
188	4576	1.25	790A0673	23900
161	5323	1.25	790A0773	24200
149	5745	1.25	790A0873	24500
128	6690	1.25	790A0973	24600
119	7228	1.25	790A1073	24500
107	8039	1.22	790A1173	21400
99	8682	1.22	790A1273	19000
83	10292	1.10	790A1373	17900
77	11114	1.10	790A1473	15100
65	13228	0.90	790A1573	22400
60	14288	0.90	790A1673	19600

Series F Gearboxes : Dimensions motorised

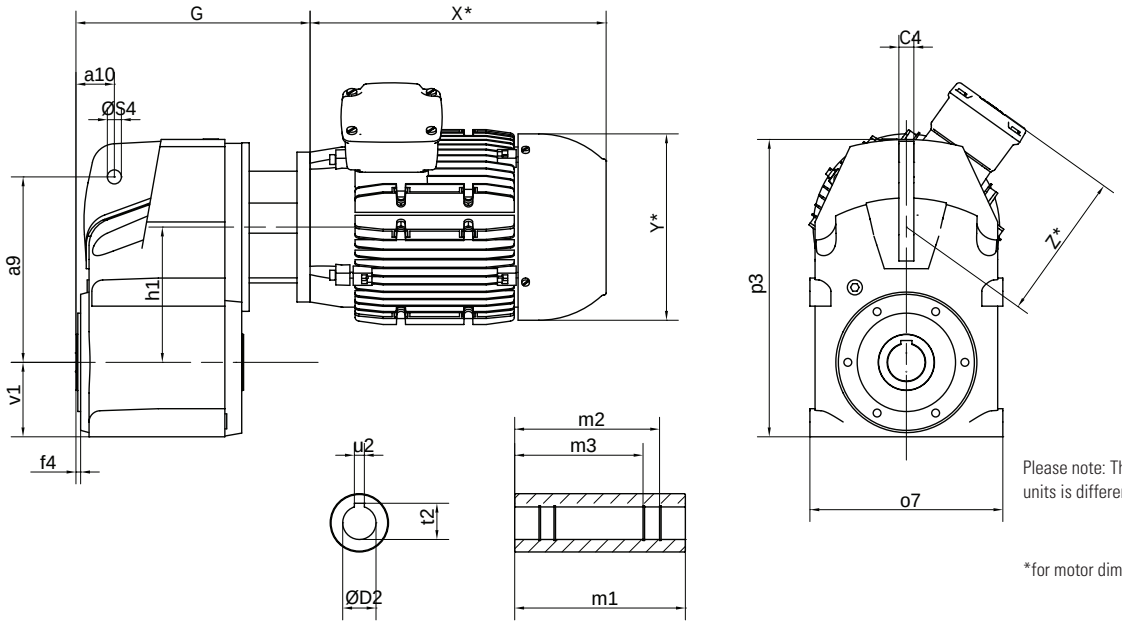

Please note: The apperance of unit 789 & 790 units is different to the other units.

*for motor dimensions see page 314

Unit Size	a9	a10	C4	f4	h1	O7	P3	S4	V1	Hollow Output Bore					
										D2	m1	m2	m3	t2	u2
780	140	25	15	5	96	150	224	15	59	25	117.5	105	89	28.5	8
781	158	32	16	5	121	171	273	15	76	30	156.5	122	105	33.5	8
782	170	32	16	5	121	171	273	15	76	35	156.5	132	122	38.5	10
783	198	41	16	5	144	206	318	15	80	40	179.0	174	142	43.5	12
784	218	41	16	6	165	231	365	15	101	40	205.0	174	156	43.5	12
785	278	50	20	7	200	282	442	24	127	50	233.5	198	183	54.0	14
786	346	62	26	3	243	346	536	24	156	60	270.0	230	210	64.6	18
787	395	70	30	5	274	400	612	27	175	70	330.0	270	-	75.0	20
788	485	88	36	5.5	332	470	748	27	216	80	370.0	313	-	85.5	22
789	485	89	40	3	385	498	784	26	237	90	350.0	-	-	95.4	25
790	550	99	50	4	414	550	877	33	236	100	410.0	-	-	106.4	28

G DIMENSION/WEIGHT

Motor Frame Size	780				781 & 782				783				784				785			
	Double		Triple		Double		Triple		Double		Triple		Double		Triple		Double		Triple	
	G	kg	G	kg	G	kg	G	kg	G	kg	G	kg	G	kg	G	kg	G	kg	G	kg
63	154	12	169	13	175	19	188	20	189	27	219	28	200	42	230	43	-	-	250	67
71	158	11	173	12	179	19	192	20	195	27	223	28	206	42	234	43	-	-	256	67
80	171	12	186	13	192	19	205	20	213	27	236	28	224	42	247	43	259	63	274	68
90	181	12	196	13	202	20	215	21	223	28	246	29	234	42	257	43	269	64	284	69
100	189	15	204	16	210	23	223	24	250	31	254	32	261	45	265	46	281	65	311	70
112	189	15	204	16	210	23	223	24	250	31	254	32	261	45	265	46	281	65	311	70
132	-	-	-	-	-	-	-	-	250	32	-	-	261	46	-	-	303	65	311	70
160	-	-	-	-	-	-	-	-	-	-	-	-	-	-	-	-	311	65	-	-
180	-	-	-	-	-	-	-	-	-	-	-	-	-	-	-	-	-	-	-	-

Motor Frame Size	786				787				788				789				790			
	Double		Triple		Double		Triple		Double		Triple		Double		Triple		Double		Triple	
	G	kg	G	kg	G	kg	G	kg	G	kg	G	kg	G	kg	G	kg	G	kg	G	kg
63	-	-	-	-	-	-	-	-	-	-	-	-	-	-	-	-	-	-	-	-
71	-	-	-	-	-	-	-	-	-	-	-	-	-	-	-	-	-	-	-	-
80	340	114	325	116	354	174	380	184	-	-	441	273	-	-	-	-	-	-	-	-
90	340	114	335	116	354	174	380	184	-	-	441	273	-	-	-	-	-	-	-	-
100	346	116	347	118	360	174	386	184	390	254	447	273	-	-	446	320	-	-	-	-
112	346	116	347	1189	360	174	386	184	390	254	447	273	-	-	446	320	-	-	-	-
132	346	119	369	121	360	174	-	-	390	254	447	273	-	-	446	320	-	-	524	506
160	376	119	-	-	395	181	-	-	425	263	482	280	-	345	476	332	-	500	496	495
180	-	-	-	-	395	181	-	-	425	263	482	280	491	345	476	332	516	500	496	495
200	-	-	-	-	395	195	-	-	425	263	482	281	491	345	-	-	516	500	524	506
225	-	-	-	-	422	195	-	-	452	277	509	295	521	359	-	-	546	514	526	509
250	-	-	-	-	-	-	-	-	-	-	-	-	521	375	-	-	546	530	-	-
280	-	-	-	-	-	-	-	-	-	-	-	-	-	-	-	-	546	530	-	-

* For bolt-on options refer to pages 274-275

Series F Gearboxes : Non-motorised selection

NON-MOTORISED UNITS SELECTION PROCEDURE

(a) Service Factor
From Table 1 select the Mechanical Service Factor (Fm) applicable to the drive. If the unit is to be subjected to frequent stop/starts in excess of 10 times per day then multiply factor Fm by Factor Fs from table 2.

(b) Input Power
Determine either the required torque (Nm) or the absorbed power (kW) required by the machine. The required Torque can be calculated using the following formula:

$$M_2 = \frac{P_2 \times 9550}{n_2}$$

M_2 = required output torque (Nm)
P_2 = absorbed power (kW)
n_2 = machine speed (rev/min)

(c) Design Power
Multiply either the required torque (Nm) or the power (kW) by the service factor determined in (a).

(d) Ratio Required
Divide the input shaft speed by the required output shaft speed to determine the gear ratio.

(e) Unit Selection
In the selection pages: 266 to 272 refer to column 1 for the nominal gear ratio closest to the value determined in step (d).

The Fenner gear ratio code is given in column 2. These are the fifth & sixth digits used in the eight digit ordering code and are included for easy reference when the unit size has been selected.

Check in column 3 for the nearest input shaft speed, then read across the table at this speed until a unit is found with either an output torque or input power that equals or exceeds the design power value determined in step (c) above. Column 4 gives the approximate output shaft speed for the selected speed and ratio combination.

(f) Overhung Loads
If an indirect drive is fitted to either the input shaft or output shaft see page 276 for more information.

TABLE 1 - MECHANICAL SERVICE FACTOR (Fm)

Types of Driven Machine	Operational Hours		
	Under 3	3 to 10	Over 10
Uniform Loads Agitators and Mixers – liquid or semi-liquid Blowers – centrifugal Bottling Machines Conveyors and Elevators – uniformly loaded Cookers Laundry Washing Machines – non-reversing Line Shafts Pumps – centrifugal and gear Wire Drawing Machines	0.80	1.00	1.25
Moderate Shock Loads Agitators and Mixers – variable density Conveyors – not uniformly loaded Cranes travel motion and hoisting Drawbench Feeders – pulsating load Hoists Kilns Laundry Tumblers Lifts Pumps – reciprocating with 3 or more cylinders Pump and Paper Making Machinery Rubber Mixers and Calendars Screens – rotary Textile Machinery	1.00	1.25	1.50
Heavy Shock Loads Brick Presses Briquetting Machines Conveyors – reciprocating and shaker Crushers Feeders – reciprocating Hammer Mills Pumps – reciprocating, 1 or 2 cylinders Rubber Masticators Screens – vibrating	1.50	1.75	2.00

TABLE 2 - STARTING FACTOR (Fs)

	Start/stops per hour					
	Up to 1	5	10	40	60	>200
Factor Fs	1.00	1.03	1.06	1.10	1.15	1.20

Series F Gearboxes : Non-motorised selection

DOUBLE REDUCTION RATINGS SIZES 780-783

Nominal Ratio	Fenner Ratio Code	Input Speed Rev/Min	Nominal Output Speed Rev/Min	780			781			782			783		
				Output Torque Nm	Input Power kW	Overhung Load Fra (kN)	Output Torque Nm	Input Power kW	Overhung Load Fra (kN)	Output Torque Nm	Input Power kW	Overhung Load Fra (kN)	Output Torque Nm	Input Power kW	Overhung Load Fra (kN)
5.0	02	2900	580	-	-	-	-	-	-	-	-	-	355	23.10	0.42
		1450	290	-	-	-	-	-	-	-	-	-	394	12.80	0.73
		960	192	-	-	-	-	-	-	-	-	-	395	8.44	1.00
		725	145	-	-	-	-	-	-	-	-	-	395	6.28	1.25
6.3	04	2900	460	52	2.80	1.07	-	-	-	-	-	-	428	19.70	0.55
		1450	230	61	1.62	1.38	-	-	-	-	-	-	516	11.80	0.95
		960	152	68	1.19	1.60	-	-	-	-	-	-	516	7.84	1.31
		725	115	72	0.95	1.78	-	-	-	-	-	-	516	5.92	1.64
7.1	05	2900	408	61	2.41	1.19	251	12.60	0.99	251	12.60	0.99	453	18.6	0.60
		1450	204	71	1.40	1.54	286	7.16	1.44	286	7.16	1.44	542	11.10	1.04
		960	135	79	1.03	1.79	286	4.74	1.80	286	4.74	1.80	556	7.54	1.44
		725	102	84	0.82	1.98	287	3.58	2.11	287	3.58	2.11	557	5.69	1.78
9.0	07	2900	322	65	2.25	1.25	283	10.10	1.19	283	10.10	1.19	477	17.50	0.66
		1450	161	76	1.32	1.61	314	5.60	1.73	314	5.60	1.73	557	10.20	1.13
		960	107	84	0.96	1.87	319	3.76	2.17	319	3.76	2.17	558	6.74	1.57
		725	81	89	0.77	2.08	319	2.84	2.53	319	2.84	2.53	558	5.09	1.96
10	08	2900	290	68	2.09	1.31	287	9.31	1.26	287	9.31	1.26	527	15.20	0.80
		1450	145	81	1.23	1.68	319	5.16	1.83	319	5.16	1.83	580	8.34	1.37
		960	96	88	0.89	1.96	327	3.50	2.28	327	3.50	2.28	614	5.84	1.89
		725	73	94	0.71	2.17	327	2.64	2.67	327	2.64	2.67	615	4.42	2.37
12	10	2900	242	75	1.81	1.43	292	8.34	1.35	292	8.34	1.35	537	13.70	0.88
		1450	121	89	1.06	1.84	326	4.65	1.96	326	4.65	1.96	591	7.49	1.51
		960	80	97	0.77	2.14	329	3.10	2.45	329	3.10	2.45	625	5.24	2.10
		725	60	104	0.62	2.37	329	2.34	2.87	329	2.34	2.87	630	3.99	2.62
14	11	2900	207	76	1.72	1.47	304	6.83	1.53	304	6.83	1.53	550	11.70	1.01
		1450	104	92	1.01	1.89	337	3.78	2.23	337	3.78	2.23	605	6.44	1.74
		960	69	100	0.73	2.21	337	2.50	2.80	337	2.50	2.80	641	4.51	2.40
		725	52	108	0.60	2.44	337	1.89	3.27	337	1.89	3.27	648	3.44	2.99
16	12	2900	181	85	1.50	1.60	309	6.12	1.64	309	6.12	1.64	561	10.4	1.12
		1450	91	99	0.87	2.06	345	3.41	2.39	345	3.41	2.39	575	5.31	1.94
		960	60	110	0.64	2.41	354	2.31	2.99	354	2.31	2.99	575	3.52	2.69
		725	45	120	0.53	2.67	354	1.74	3.49	354	1.74	3.49	576	2.66	3.38
20	14	2900	145	89	1.38	1.68	319	5.15	1.84	319	5.15	1.84	572	9.12	1.27
		1450	73	103	0.80	2.16	357	2.87	2.67	357	2.87	2.67	629	5.00	2.19
		960	48	116	0.59	2.51	380	2.02	3.34	380	2.02	3.34	650	3.42	3.04
		725	36	127	0.49	2.80	386	1.55	3.88	386	1.55	3.88	650	2.58	3.81
22	15	2900	132	93	1.27	1.76	326	4.74	1.94	326	4.74	1.94	582	8.29	1.39
		1450	66	108	0.73	2.27	362	2.63	2.82	362	2.63	2.82	639	4.55	2.40
		960	44	123	0.55	2.64	380	1.83	3.54	380	1.83	3.54	677	3.19	3.31
		725	33	129	0.44	2.93	380	1.38	4.13	380	1.38	4.13	684	2.43	4.18
25	16	2900	116	96	1.18	1.83	332	4.25	2.08	332	4.25	2.08	587	7.85	1.46
		1450	58	112	0.68	2.36	370	2.36	3.02	370	2.36	3.02	645	4.30	2.52
		960	38	129	0.52	2.74	386	1.63	3.78	386	1.63	3.78	683	3.02	3.51
		725	29	129	0.39	3.04	386	1.23	4.43	386	1.23	4.43	701	2.34	4.39
28	17	2900	104	99	1.10	1.89	338	3.82	2.22	338	3.82	2.22	601	6.78	1.66
		1450	52	117	0.65	2.44	375	2.11	3.23	375	2.11	3.23	660	3.72	2.86
		960	34	129	0.47	2.86	375	1.40	4.07	375	1.40	4.07	696	2.59	3.98
		725	26	129	0.36	3.17	375	1.06	4.70	375	1.06	4.70	696	1.96	4.91
32	18	2900	91	102	1.03	1.97	343	3.52	2.35	343	3.52	2.35	605	6.40	1.75
		1450	45	121	0.61	2.53	374	1.91	3.41	374	1.91	3.41	667	3.52	3.04
		960	30	129	0.43	2.96	374	1.27	4.27	374	1.27	4.27	699	2.44	4.18
		725	23	129	0.32	3.26	375	0.96	5.02	375	0.96	5.02	699	1.84	5.23
36	19	2900	81	107	0.92	2.08	351	3.13	2.53	351	3.13	2.53	623	5.32	2.08
		1450	40	129	0.56	2.69	391	1.74	3.68	391	1.74	3.68	687	2.92	3.58
		960	27	129	0.37	3.12	393	1.16	4.60	393	1.16	4.60	709	2.00	4.91
		725	20	51	0.28	3.50	393	0.87	5.42	393	0.87	5.42	709	1.51	6.28
40	20	2900	73	112	0.81	2.23	355	2.91	2.65	355	2.91	2.65	638	4.62	2.37
		1450	36	129	0.46	2.89	371	1.52	3.88	371	1.52	3.88	703	2.54	4.08
		960	24	129	0.31	3.37	371	1.01	4.80	371	1.01	4.80	716	1.71	5.60
		725	18	129	0.23	3.73	371	0.76	5.73	371	0.76	5.73	716	1.29	7.19
50	22	2900	58	117	0.72	2.36	366	2.50	2.94	366	2.50	2.94	646	4.28	2.55
		1450	29	129	0.40	3.04	391	1.34	4.27	391	1.34	4.27	712	2.35	4.39
		960	19	129	0.26	3.57	392	0.89	5.42	392	0.89	5.42	720	1.57	6.03
		725	15	129	0.2	3.91	392	0.67	6.33	392	0.67	6.33	720	1.19	7.56
56	23	2900	52	122	0.68	2.46	371	2.12	3.23	371	2.12	3.23	522	2.83	2.99
		1450	26	129	0.36	3.17	387	1.10	4.70	387	1.10	4.70	543	1.47	5.23
		960	17	129	0.24	3.73	387	0.73	5.91	387	0.73	5.91	566	1.01	7.19
		725	13	129	0.18	4.14	387	0.55	6.83	387	0.55	6.83	582	0.79	9.00
63	24	2900	46	129	0.59	2.62	339	1.72	3.45	339	1.72	3.45	462	2.25	3.25
		1450	23	129	0.30	3.37	363	0.92	5.02	363	0.92	5.02	480	1.17	5.60
		960	15	129	0.20	3.86	378	0.63	6.33	378	0.63	6.33	501	0.80	7.98
		725	12	129	0.15	3.86	389	0.49	7.10	389	0.49	7.10	512	0.62	9.20
71	25	2900	41	113	0.46	2.77	293	1.28	3.72	293	1.28	3.72	364	1.58	3.58
		1450	20	113	0.22	3.57	314	0.69	5.42	314	0.69	5.42	364	0.79	6.28
		960	14	113	0.15	3.86	328	0.47	6.83	328	0.47	6.83	364	0.52	8.46
		725	10	113	0.11	3.86	337	0.37	7.10	337	0.37	7.10	364	0.40	9.20
90	27	2900	32	105	0.37	2.89	264	1.02	4.00	264	1.02	4.00	-	-	-
		1450	16	112	0.20	3.73	283	0.54	5.91	283	0.54	5.91	-	-	-
		960	11	112	0.13	3.86	295	0.38	7.10	295	0.38	7.10	-	-	-
		725	8	112	0.10	3.86	303	0.29	7.10	303	0.29	7.10	-	-	-
100	28	2900	29	-	-	-	235	0.80	4.27	235	0.80	4.27	-	-	-
		1450	15	-	-	-	252	0.43	6.33	252	0.43	6.33	-	-	-
		960	10	-	-	-	263	0.30	7.10	263	0.30	7.10	-	-	-
		725	7	-	-	-	270	0.23	7.10	270	0.23	7.10	-	-	-

Series F Gearboxes : Non-motorised selection

DOUBLE REDUCTION RATINGS SIZES 784-786

Nominal Ratio	Fenner Ratio Code	Input Speed Rev/Min	Nominal Output Speed Rev/Min	784			785			786		
				Output Torque Nm	Input Power kW	Overhung Load Fra (kN)	Output Torque Nm	Input Power kW	Overhung Load Fra (kN)	Output Torque Nm	Input Power kW	Overhung Load Fra (kN)
7.1	05	2900	408	380	19.20	1.85	560	26.10	2.05	908	41.30	2.12
		1450	204	468	11.80	2.63	564	13.10	2.89	914	20.70	3.02
		960	135	509	8.44	3.22	565	8.65	3.54	917	13.70	3.74
		725	102	509	6.38	3.71	566	6.53	4.05	918	10.30	4.31
9.0	07	2900	322	465	16.70	2.20	771	25.90	2.41	1290	41.30	2.54
		1450	161	573	10.20	3.11	783	13.10	3.39	1300	20.70	3.62
		960	107	649	7.66	3.83	784	8.65	4.15	1300	13.70	4.46
		725	81	665	5.92	4.42	785	6.53	4.76	1300	10.30	5.16
10	08	2900	290	495	15.80	2.33	822	24.50	2.55	1440	41.30	2.68
		1450	145	610	9.72	3.30	880	13.10	3.59	1450	20.70	3.81
		960	96	691	7.27	4.06	881	8.65	4.39	1450	13.70	4.72
		725	73	717	5.69	4.68	882	6.53	5.06	1450	10.30	5.43
12	10	2900	242	526	15.00	2.47	866	23.50	2.67	1550	39.80	2.83
		1450	121	649	9.20	3.49	968	13.10	3.75	1610	20.70	4.04
		960	80	718	6.74	4.29	969	8.65	4.62	1610	13.70	4.99
		725	60	719	5.09	4.96	970	6.53	5.29	1610	10.30	5.75
14	11	2900	207	593	13.30	2.78	986	20.40	3.05	1750	34.90	3.23
		1450	104	730	8.15	3.94	1210	12.50	4.30	2080	20.70	4.61
		960	69	808	5.96	4.85	1270	8.65	5.25	2090	13.70	5.70
		725	52	808	4.50	5.60	1270	6.53	6.06	2090	10.30	6.60
16	12	2900	181	629	12.40	2.96	1050	19.10	3.25	1850	32.70	3.42
		1450	91	775	7.63	4.19	1290	11.70	4.56	2270	20.10	4.89
		960	60	825	5.37	5.16	1440	8.65	5.61	2340	13.70	6.02
		725	45	825	4.06	5.96	1440	6.53	6.41	2340	10.30	7.01
20	14	2900	145	681	11.30	3.23	1140	17.20	3.58	2020	29.20	3.80
		1450	73	838	6.92	4.59	1410	10.50	5.02	2490	17.90	5.43
		960	48	842	4.60	5.66	1520	7.54	6.19	2810	13.40	6.68
		725	36	842	3.47	6.49	1520	5.69	7.11	2870	10.30	7.73
22	15	2900	132	723	10.40	3.47	1190	16.20	3.74	2120	27.20	4.04
		1450	66	741	5.31	4.92	1470	9.98	5.25	2610	16.70	5.75
		960	44	741	3.52	6.03	1590	7.14	6.48	2950	12.50	7.10
		725	33	741	2.66	6.96	1590	5.39	7.44	3170	10.10	8.26
25	16	2900	116	770	9.52	3.75	1260	14.90	4.02	2260	24.90	4.37
		1450	58	837	5.16	5.30	1550	9.18	5.66	2780	15.30	6.26
		960	38	837	3.42	6.58	1720	6.73	6.91	3150	11.40	7.73
		725	29	837	2.58	7.56	1720	5.08	7.96	3320	9.11	8.91
28	17	2900	104	798	8.83	3.96	1320	13.80	4.27	2320	23.10	4.61
		1450	52	880	4.86	5.60	1620	8.47	6.00	2690	13.40	6.60
		960	34	880	3.22	6.96	1830	6.35	7.32	2700	8.85	8.12
		725	26	880	2.43	8.00	1860	4.86	8.43	2700	6.68	9.51
32	18	2900	91	828	8.59	4.08	1380	13.10	4.48	2370	21.50	4.83
		1450	45	891	4.61	5.77	1690	8.03	6.33	2580	11.70	6.92
		960	30	892	3.06	7.18	1750	5.48	7.68	2580	7.74	8.57
		725	23	892	2.31	8.16	1750	4.14	9.00	2580	5.85	9.98
36	19	2900	81	882	7.72	4.44	1450	12.00	4.79	2450	19.70	5.12
		1450	40	887	3.88	6.32	1790	7.40	6.73	2770	11.10	7.29
		960	27	887	2.57	7.84	1800	4.93	8.26	2770	7.34	9.10
		725	20	887	1.94	8.94	1800	3.72	9.45	2770	5.54	10.53
40	20	2900	73	889	7.30	4.62	1520	11.10	5.10	2510	17.80	5.47
		1450	36	890	3.65	6.58	1780	6.51	7.21	2910	10.30	7.85
		960	24	890	2.41	8.00	1780	4.31	8.80	2910	6.84	9.74
		725	18	890	1.82	9.43	1780	3.25	10.28	2910	5.16	11.19
50	22	2900	58	890	5.89	5.12	1570	9.92	5.47	2560	15.00	6.02
		1450	29	892	2.95	7.30	1790	5.66	7.68	3160	9.26	8.57
		960	19	893	1.95	8.94	1790	3.74	9.45	3160	6.13	10.84
		725	15	893	1.47	10.33	1790	2.83	10.98	3160	4.63	12.44
56	23	2900	52	891	5.01	5.60	1620	8.62	5.94	2620	13.20	6.53
		1450	26	892	2.50	8.00	1840	4.88	8.43	3300	8.31	9.30
		960	17	893	1.66	9.70	1840	3.23	10.28	3380	5.63	11.56
		725	13	893	1.25	11.30	1840	2.44	11.84	3380	4.25	13.54
63	24	2900	46	858	4.41	5.83	1640	7.97	6.26	2670	12.30	6.84
		1450	23	892	2.29	8.34	1840	4.48	8.80	3370	7.73	9.74
		960	15	893	1.52	10.33	1840	2.96	10.98	3390	5.14	11.97
		725	12	893	1.15	11.30	1840	2.24	12.35	3390	3.88	14.22
71	25	2900	41	673	2.83	6.49	1490	6.05	6.82	2740	10.20	7.62
		1450	20	699	1.47	9.18	1590	3.23	9.70	3390	6.34	10.84
		960	14	729	1.01	11.30	1650	2.21	11.84	3390	4.20	13.54
		725	10	750	0.79	11.30	1650	1.67	13.63	3390	3.17	15.93
90	27	2900	32	595	2.25	6.86	1220	4.30	7.32	2760	9.47	7.98
		1450	16	619	1.17	9.70	1270	2.23	10.28	3300	5.65	11.56
		960	11	645	0.80	11.30	1290	1.51	12.94	3300	3.74	14.22
		725	8	659	0.62	11.30	1290	1.14	14.44	3300	2.82	17.05
100	28	2900	29	468	1.58	7.30	1070	3.41	7.68	2700	8.06	8.57
		1450	15	469	0.79	10.33	1100	1.75	10.98	2690	4.03	12.44
		960	10	469	0.52	11.30	1100	1.16	13.63	2920	2.89	15.00
		725	7	469	0.40	11.30	1100	0.87	15.42	2940	2.19	18.45

Series F Gearboxes : Non-motorised selection

DOUBLE REDUCTION RATINGS SIZES 787-790

Nominal Ratio	Fenner Ratio Code	Input Speed Rev/Min	Nominal Output Speed Rev/Min	787			788			789			790		
				Output Torque Nm	Input Power kW	Overhung Load Fra (kN)	Output Torque Nm	Input Power kW	Overhung Load Fra (kN)	Output Torque Nm	Input Power kW	Overhung Load Fra (kN)	Output Torque Nm	Input Power kW	Overhung Load Fra (kN)
4.5	01	2900	-	-	-	-	-	-	-	-	-	-	-	-	-
		1450	322	-	-	-	-	-	-	3798	125.50	17.90	4115	133.10	21.80
		960	213	-	-	-	-	-	-	3798	81.65	21.30	4115	86.55	25.80
		725	161	-	-	-	-	-	-	3798	61.45	23.90	4115	65.15	28.80
5.0	02	2900	580	-	-	-	-	-	-						
		1450	290	1960	60.30	32.00	2560	78.20	43.00	4326	125.50	18.10	4445	133.10	22.20
		960	192	2220	45.20	32.00	2560	51.80	43.00	4326	81.65	21.80	4445	86.55	26.30
		725	145	2420	37.10	32.00	2560	39.10	43.00	4326	61.45	24.50	4445	65.15	29.40
5.6	03	2900	-	-	-	-	-	-	-	-	-	-	-	-	-
		1450	259	-	-	-	-	-	-	4642	125.50	18.40	5097	133.10	22.70
		960	171	-	-	-	-	-	-	4642	81.65	22.10	5097	86.55	27.00
		725	129	-	-	-	-	-	-	4642	61.45	24.90	5097	65.15	30.30
6.3	04	2900	-	-	-	-	-	-	-	-	-	-	-	-	-
		1450	230	2270	54.20	32.00	3020	73.60	43.00	5288	125.50	18.60	5505	133.10	23.10
		960	152	2570	40.50	32.00	3220	51.80	43.00	5288	81.65	22.40	5505	86.55	27.50
		725	115	2800	33.20	32.00	3220	39.10	43.00	5288	61.45	25.30	5505	65.15	30.80
7.1	05	2900	-	-	-	-	-	-	-	-	-	-	-	-	-
		1450	204	2340	52.30	32.00	3200	70.00	43.00	6037	125.50	18.90	6500	133.10	23.60
		960	135	2650	39.10	32.00	3580	51.80	43.00	6037	81.65	22.90	6500	86.55	28.30
		725	102	2890	32.10	32.00	3580	39.10	43.00	6037	61.45	25.90	6500	65.15	31.80
8.0	06	2900	-	-	-	-	-	-	-	-	-	-	-	-	-
		1450	181	2490	49.50	32.00	3340	67.20	43.00	6852	125.50	18.90	7021	133.10	23.90
		960	120	2820	37.00	32.00	3780	50.30	43.00	6852	81.65	23.10	7021	86.55	28.70
		725	91	3070	30.40	32.00	3900	39.10	43.00	6852	61.45	26.30	7021	65.15	32.30
9.0	07	2900	-	-	-	-	-	-	-	-	-	-	-	-	-
		1450	161	2640	46.80	32.00	3560	63.10	43.00	7141	122.20	19.30	8166	133.10	24.20
		960	107	2990	35.00	32.00	4040	47.20	43.00	7192	80.04	23.60	8166	86.55	29.30
		725	81	3250	28.80	32.00	4390	38.80	43.00	7192	60.25	26.80	8166	65.15	33.10
10	08	2900	-	-	-	-	-	-	-	-	-	-	-	-	-
		1450	145	2850	44.00	32.00	3770	60.40	43.00	7224	108.50	20.30	8820	133.10	24.50
		960	96	3220	32.90	32.00	4270	45.20	43.00	8193	80.03	23.60	8820	86.55	29.70
		725	73	3510	27.00	32.00	4550	37.10	43.00	8193	60.23	27.00	8820	65.15	33.60
11	09	2900	264	-	-	-	-	-	-	6328	167.30	16.50	-	-	-
		1450	132	2990	41.10	32.00	4040	55.00	43.00	7791	103.00	21.00	10268	133.10	24.60
		960	87	3380	30.80	32.00	4580	41.10	43.00	8370	71.94	25.00	10268	86.55	30.10
		725	66	3680	25.30	32.00	4980	33.80	43.00	8370	54.15	28.50	10268	65.15	34.20
12	10	2900	242	-	-	-	-	-	-	6340	147.20	17.50	-	-	-
		1450	121	3140	38.60	32.00	4170	52.50	43.00	7806	90.61	22.20	11090	133.10	24.50
		960	80	3550	28.90	32.00	4720	39.30	43.00	8881	67.04	25.80	11090	86.55	30.40
		725	60	3850	23.60	32.00	5140	32.30	43.00	9434	54.17	28.70	11090	65.15	34.60
14	11	2900	207	-	-	-	-	-	-	6733	147.60	17.60	-	-	-
		1450	104	3390	36.20	32.00	4530	49.00	43.00	8289	90.86	22.40	11993	129.40	21.40
		960	69	3840	27.10	32.00	5130	36.70	43.00	8744	62.34	26.90	11993	84.14	30.90
		725	52	4180	22.20	32.00	5580	30.10	43.00	8744	46.92	30.60	11993	63.33	35.20
16	12	2900	181	-	-	-	-	-	-	6708	129.10	18.60	10138	202.50	15.90
		1450	91	3550	33.90	32.00	4670	46.80	43.00	8258	79.47	23.70	12954	129.40	19.00
		960	60	4020	25.40	32.00	5290	35.00	43.00	9396	58.80	27.60	12954	84.16	31.10
		725	45	4310	20.50	32.00	5750	28.80	43.00	9960	46.92	30.80	12954	63.34	35.60
18	13	2900	161	-	-	-	-	-	-	7357	122.68	19.30	10577	178.30	17.00
		1450	81	3610	32.00	32.00	4910	42.40	43.00	9058	75.52	24.60	13884	116.99	17.90
		960	53	4090	24.00	32.00	5560	31.70	43.00	10120	54.87	28.80	15151	83.03	26.10
		725	40	4310	19.10	32.00	6050	26.10	43.00	10120	41.30	32.80	15254	62.92	35.90
20	14	2900	145	-	-	-	-	-	-	7282	106.59	20.50	11409	178.10	14.90
		1450	73	3760	29.20	32.00	5150	39.30	43.00	8965	65.61	26.10	14966	116.78	15.10
		960	48	4240	21.80	32.00	5830	29.40	43.00	10200	48.55	30.30	15852	80.44	26.10
		725	36	4240	16.50	32.00	6340	24.10	43.00	10617	38.04	34.10	15957	60.95	36.70
22	15	2900	132	3300	45.60	32.00	4440	61.20	43.00	7854	104.91	20.90	11145	146.10	20.60
		1450	66	4070	28.00	32.00	5470	37.60	43.00	9669	64.58	26.60	14520	95.85	22.40
		960	44	4310	19.60	32.00	6190	28.10	43.00	10120	43.96	31.90	16005	68.24	31.30
		725	33	4310	14.80	32.00	6740	23.10	43.00	10120	33.09	36.30	16100	51.67	39.50
25	16	2900	116	3480	42.10	32.00	4650	56.60	43.00	7732	90.66	22.20	12019	145.90	18.50
		1450	58	4280	25.80	32.00	5730	34.80	43.00	9519	55.81	28.30	15757	95.64	19.60
		960	38	4310	17.20	32.00	6480	26.00	43.00	10617	40.48	33.10	15946	62.95	36.10
		725	29	4310	13.00	32.00	7050	21.40	43.00	10617	30.47	37.70	16039	47.65	41.20
28	17	2900	104	3220	35.50	32.00	4730	52.80	43.00	8433	88.93	22.60	11582	119.90	25.30
		1450	52	4060	22.30	32.00	5820	32.40	43.00	10120	53.36	29.10	15188	78.64	28.10
		960	34	4240	15.40	32.00	6400	23.50	43.00	10120	34.70	35.50	16086	54.17	38.60
		725	26	4240	11.60	32.00	6400	17.80	43.00	10120	26.12	40.30	16172	40.99	44.10
32	18	2900	91	3250	32.30	32.00	4910	49.30	43.00	8302	76.88	24.10	12488	119.80	23.20
		1450	45	4110	20.30	32.00	6040	30.30	43.00	10221	47.32	30.70	15874	76.11	28.30
		960	30	4240	13.90	32.00	6400	21.20	43.00	10617	31.97	36.90	16024	49.97	40.30
		725	23	4240	10.50	32.00	6400	15.00	43.00	10617	24.06	41.80	16108	37.81	45.90
36	19	2900	81	3960	33.80	32.00	5240	46.60	43.00	9043	77.46	24.30	11943	100.40	28.40
		1450	40	4310	18.40	32.00	6460	28.60	43.00	10120	43.35	32.10	15465	64.03	35.20
		960	27	4310	12.20	32.00	7250	21.30	43.00	10120	28.19	39.00	16150	44.17	42.50
		725	20	4310	9.18	32.00	7250	16.00	43.00	10120	21.22	44.10	16229	33.41	48.40

Series F Gearboxes : Non-motorised selection

DOUBLE REDUCTION RATINGS SIZES 787-790

Nominal Ratio	Fenner Ratio Code	Input Speed Rev/Min	Nominal Output Speed Rev/Min	787			788			789			790		
				Output Torque Nm	Input Power kW	Overhung Load Fra (kN)	Output Torque Nm	Input Power kW	Overhung Load Fra (kN)	Output Torque Nm	Input Power kW	Overhung Load Fra (kN)	Output Torque Nm	Input Power kW	Overhung Load Fra (kN)
40	20	2900	73	4100	31.60	32.00	5440	43.50	43.00	8893	66.87	25.90	12874	100.3	27.90
		1450	36	4310	16.60	32.00	6690	26.70	43.00	10617	39.91	33.30	15951	62.10	36.30
		960	24	4310	11.00	32.00	7250	19.10	43.00	10617	25.96	40.50	16087	40.73	44.40
		725	18	4310	8.27	32.00	7250	14.50	43.00	10617	19.54	45.80	16163	30.8	50.30
45	21	2900	64	3460	24.30	32.00	5570	39.30	43.00	8153	54.57	28.40	10498	71.86	32.80
		1450	32	4310	15.10	32.00	6400	22.50	43.00	8545	28.60	37.80	13655	46.74	40.90
		960	21	4310	10.00	32.00	6400	14.90	43.00	8710	18.96	45.10	14114	31.42	48.90
		725	16	4310	7.57	32.00	6400	11.20	43.00	8780	14.38	50.50	14233	23.85	55.10
50	22	2900	58	3500	22.30	32.00	5850	35.80	43.00	9287	54.58	28.50	11310	71.67	33.20
		1450	29	4240	13.50	32.00	6400	19.50	43.00	9733	28.60	38.40	14749	46.73	41.30
		960	19	4240	8.92	32.00	6400	12.90	43.00	9921	18.96	45.90	15244	31.41	49.60
		725	15	4240	6.73	32.00	6400	9.77	43.00	10000	14.38	51.60	15373	23.84	55.90
56	23	2900	52	4310	23.50	32.00	6160	34.60	43.00	7406	42.78	31.20	10598	58.74	35.90
		1450	26	4310	11.70	32.00	7250	20.30	43.00	7617	22.00	41.40	11213	31.08	47.50
		960	17	4310	7.77	32.00	7250	13.40	43.00	7720	14.50	49.10	11370	20.49	56.50
		725	13	4310	5.87	32.00	7250	10.10	43.00	7779	11.00	54.80	11458	15.54	62.20
63	24	2900	46	4310	21.30	32.00	6460	31.50	43.00	8435	42.77	31.60	11471	59.86	36.30
		1450	23	4310	10.60	32.00	7250	17.60	43.00	8677	22.00	42.20	12112	31.08	48.20
		960	15	4310	7.03	32.00	7250	11.70	43.00	8794	14.50	50.20	12281	20.49	57.40
		725	12	4310	5.31	32.00	7250	8.82	43.00	8860	11.00	56.00	12376	15.54	62.20
71	25	2900	41	3610	16.80	32.00	6160	27.90	43.00	-	-	-	-	-	-
		1450	20	3950	9.16	32.00	6170	14.00	43.00	-	-	-	-	-	-
		960	14	3950	6.06	32.00	6170	9.25	43.00	-	-	-	-	-	-
		725	10	3950	4.58	32.00	6170	6.98	43.00	-	-	-	-	-	-
90	26	2900	36	3610	14.90	32.00	5600	23.70	43.00	-	-	-	-	-	-
		1450	18	3660	7.56	32.00	5610	11.80	43.00	-	-	-	-	-	-
		960	12	3660	5.01	32.00	5610	7.84	43.00	-	-	-	-	-	-
		725	9	3660	3.78	32.00	5610	5.92	43.00	-	-	-	-	-	-
90	27	2900	32	4310	15.50	32.00	7080	25.60	43.00	-	-	-	-	-	-
		1450	16	4310	7.75	32.00	7250	13.10	43.00	-	-	-	-	-	-
		960	11	4310	5.13	32.00	7250	8.66	43.00	-	-	-	-	-	-
		725	8	4310	3.87	32.00	7250	6.54	43.00	-	-	-	-	-	-
100	28	2900	29	4310	13.80	32.00	7040	23.70	43.00	-	-	-	-	-	-
		1450	15	4310	6.91	32.00	7040	11.80	43.00	-	-	-	-	-	-
		960	10	4310	4.57	32.00	7050	7.84	43.00	-	-	-	-	-	-
		725	7	4310	3.45	32.00	7050	5.92	43.00	-	-	-	-	-	-

Series F Gearboxes : Non-motorised selection

TRIPLE REDUCTION RATINGS SIZES 780-783

Nominal Ratio	Fenner Ratio Code	Input Speed Rev/Min	Nominal Output Speed Rev/Min	780			781			782			783		
				Output Torque Nm	Input Power kW	Overhung Load Fra (kN)	Output Torque Nm	Input Power kW	Overhung Load Fra (kN)	Output Torque Nm	Input Power kW	Overhung Load Fra (kN)	Output Torque Nm	Input Power kW	Overhung Load Fra (kN)
90	35	2900	36	-	-	-	-	-	-	-	-	-	448	1.82	3.81
		1450	18	-	-	-	-	-	-	-	-	-	530	1.07	6.55
		960	12	-	-	-	-	-	-	-	-	-	617	0.82	9.00
		725	9	-	-	-	-	-	-	-	-	-	685	0.69	9.20
90	36	2900	32	128	0.45	2.93	-	-	-	-	-	-	433	1.59	4.08
		1450	16	129	0.23	3.81	-	-	-	-	-	-	519	0.95	7.19
		960	11	135	0.16	3.86	-	-	-	-	-	-	605	0.73	9.20
		725	8	141	0.12	3.86	-	-	-	-	-	-	673	0.62	9.20
100	37	2900	29	129	0.41	3.04	303	0.98	4.43	303	0.98	4.43	447	1.43	4.51
		1450	15	129	0.20	3.86	366	0.59	6.57	366	0.59	6.57	547	0.87	7.98
		960	10	137	0.14	3.86	417	0.44	7.10	417	0.44	7.10	638	0.67	9.20
		725	7	144	0.11	3.86	424	0.34	7.10	424	0.34	7.10	710	0.57	9.20
112	38	2900	26	129	0.37	3.17	309	0.90	4.70	309	0.90	4.70	457	1.35	4.91
		1450	13	130	0.19	3.86	380	0.55	6.83	380	0.55	6.83	566	0.83	8.46
		960	9	139	0.13	3.86	423	0.41	7.10	423	0.41	7.10	660	0.64	9.20
		725	6	146	0.10	3.86	425	0.31	7.10	425	0.31	7.10	735	0.54	9.20
125	39	2900	23	129	0.32	3.32	319	0.85	4.91	319	0.85	4.91	480	1.18	5.60
		1450	12	133	0.16	3.86	398	0.53	7.10	398	0.53	7.10	609	0.74	9.20
		960	8	143	0.12	3.86	429	0.38	7.10	429	0.38	7.10	712	0.58	9.20
		725	6	147	0.09	3.86	429	0.28	7.10	429	0.28	7.10	771	0.47	9.20
160	41	2900	18	129	0.27	3.57	332	0.75	5.42	332	0.75	5.42	502	1.03	6.55
		1450	9	138	0.14	3.86	413	0.47	7.10	413	0.47	7.10	650	0.66	9.20
		960	6	147	0.10	3.86	431	0.32	7.10	431	0.32	7.10	761	0.51	9.20
		725	5	147	0.08	3.86	431	0.24	7.10	431	0.24	7.10	771	0.39	9.20
190	42	2900	16	129	0.23	3.81	348	0.66	5.91	348	0.66	5.91	526	0.96	7.19
		1450	8	141	0.12	3.86	425	0.40	7.10	425	0.40	7.10	682	0.62	9.20
		960	5	147	0.09	3.86	433	0.27	7.10	433	0.27	7.10	771	0.46	9.20
		725	4	147	0.07	3.86	433	0.20	7.10	433	0.20	7.10	771	0.35	9.20
200	43	2900	15	129	0.21	3.86	376	0.61	6.57	376	0.61	6.57	561	0.88	7.98
		1450	7	144	0.11	3.86	436	0.35	7.10	436	0.35	7.10	728	0.57	9.20
		960	5	147	0.08	3.86	441	0.24	7.10	441	0.24	7.10	771	0.40	9.20
		725	4	147	0.06	3.86	441	0.18	7.10	441	0.18	7.10	771	0.30	9.20
225	44	2900	13	132	0.17	3.86	390	0.57	6.83	390	0.57	6.83	591	0.81	9.00
		1450	6	147	0.10	3.86	441	0.32	7.10	441	0.32	7.10	731	0.50	9.20
		960	4	147	0.06	3.86	441	0.21	7.10	441	0.21	7.10	762	0.35	9.20
		725	3	147	0.05	3.86	441	0.16	7.10	441	0.16	7.10	771	0.27	9.20
290	46	2900	10	132	0.16	3.86	408	0.49	7.10	408	0.49	7.10	621	0.75	9.20
		1450	5	147	0.08	3.86	442	0.27	7.10	442	0.27	7.10	651	0.39	9.20
		960	3	147	0.06	3.86	442	0.18	7.10	442	0.18	7.10	679	0.27	9.20
		725	3	147	0.04	3.86	442	0.13	7.10	442	0.13	7.10	699	0.21	9.20
315	47	2900	9	138	0.14	3.86	418	0.44	7.10	418	0.44	7.10	-	-	-
		1450	5	147	0.07	3.86	432	0.23	7.10	432	0.23	7.10	-	-	-
		960	3	147	0.05	3.86	432	0.15	7.10	432	0.15	7.10	-	-	-
		725	2	147	0.04	3.86	432	0.11	7.10	432	0.11	7.10	-	-	-
360	50	2900	8	-	-	-	401	0.37	7.10	401	0.37	7.10	-	-	-
		1450	4	-	-	-	425	0.20	7.10	425	0.20	7.10	-	-	-
		960	3	-	-	-	425	0.13	7.10	425	0.13	7.10	-	-	-
		725	2	-	-	-	425	0.10	7.10	425	0.10	7.10	-	-	-

Series F Gearboxes : Non-motorised selection

TRIPLE REDUCTION RATINGS SIZES 784-786

Nominal Ratio	Fenner Ratio Code	Input Speed Rev/Min	Nominal Output Speed Rev/Min	784			785			786		
				Output Torque Nm	Input Power kW	Overhung Load Fra (kN)	Output Torque Nm	Input Power kW	Overhung Load Fra (kN)	Output Torque Nm	Input Power kW	Overhung Load Fra (kN)
100	37	2900	29	578	1.82	4.62	1060	3.11	8.10	3100	8.70	8.91
		1450	15	682	1.07	8.36	1240	1.82	11.38	3390	4.72	12.95
		960	10	795	0.82	11.30	1430	1.38	14.44	3390	3.12	15.93
		725	7	883	0.69	11.30	1580	1.16	16.63	3390	2.36	18.45
112	38	2900	26	557	1.59	5.09	1010	2.80	8.26	3000	7.69	9.30
		1450	13	668	0.95	9.53	1190	1.63	11.84	3390	4.31	13.54
		960	9	779	0.73	11.30	1380	1.25	14.44	3390	2.85	17.05
		725	6	866	0.62	11.30	1530	1.05	16.63	3390	2.15	19.70
125	39	2900	23	576	1.43	5.68	1060	2.47	9.00	3120	7.05	9.98
		1450	12	704	0.87	10.27	1270	1.47	12.94	3390	3.81	14.22
		960	8	822	0.67	11.30	1470	1.13	15.42	3390	2.52	18.45
		725	6	915	0.57	11.30	1640	0.95	17.00	3390	1.90	19.00
160	41	2900	18	589	1.35	6.16	1080	2.35	9.45	3220	6.45	10.53
		1450	9	729	0.83	11.15	1300	1.41	13.63	3390	3.38	15.00
		960	6	851	0.64	11.30	1510	1.09	16.63	3390	2.23	18.45
		725	5	932	0.53	11.30	1680	0.91	17.00	3440	1.71	19.70
180	42	2900	16	618	1.18	7.08	1140	2.00	10.61	3380	5.59	11.97
		1450	8	784	0.74	11.30	1420	1.24	15.42	3390	2.79	17.05
		960	5	917	0.58	11.30	1650	0.96	17.00	3390	1.85	19.00
		725	4	959	0.45	11.30	1840	0.80	17.00	3540	1.45	19.70
200	43	2900	15	647	1.03	8.36	1190	1.77	11.38	3390	4.81	12.95
		1450	7	837	0.66	11.30	1510	1.12	16.63	3390	2.40	18.45
		960	5	944	0.50	11.30	1770	0.87	17.00	3480	1.62	19.70
		725	4	988	0.39	11.30	1970	0.73	17.00	3600	1.27	19.70
225	44	2900	13	677	0.96	9.53	1220	1.66	11.84	3390	4.38	13.54
		1450	6	878	0.62	11.30	1570	1.06	17.00	3390	2.18	19.70
		960	4	962	0.45	11.30	1830	0.82	17.00	3530	1.50	19.70
		725	3	1010	0.35	11.30	2040	0.69	17.00	3600	1.15	19.70
280	46	2900	10	722	0.88	11.30	1310	1.46	12.94	3390	3.57	15.00
		1450	5	923	0.56	11.30	1700	0.94	17.00	3420	1.79	19.70
		960	3	985	0.39	11.30	1990	0.73	17.00	3600	1.25	19.70
		725	3	1010	0.31	11.30	2120	0.59	17.00	3600	0.94	19.70
315	47	2900	9	761	0.81	11.30	1400	1.39	13.63	3390	3.27	15.93
		1450	5	941	0.50	11.30	1810	0.90	17.00	3460	1.66	19.70
		960	3	981	0.35	11.30	2100	0.69	17.00	3600	1.14	19.70
		725	2	1010	0.27	11.30	2120	0.53	17.00	3600	0.86	19.70
360	50	2900	8	800	0.75	11.30	1460	1.30	14.44	3390	2.85	17.05
		1450	4	839	0.39	11.30	1780	0.79	17.00	3540	1.48	19.70
		960	3	875	0.27	11.30	1780	0.52	17.00	3600	1.00	19.70
		725	2	900	0.21	11.30	1780	0.40	17.00	3600	0.75	19.70

Series F Gearboxes : Non-motorised selection

TRIPLE REDUCTION RATINGS SIZES 787-790

Nominal Ratio	Fenner Ratio Code	Input Speed Rev/Min	Nominal Output Speed Rev/Min	787			788			789			790		
				Output Torque Nm	Input Power kW	Overhung Load Fra (kN)	Output Torque Nm	Input Power kW	Overhung Load Fra (kN)	Output Torque Nm	Input Power kW	Overhung Load Fra (kN)	Output Torque Nm	Input Power kW	Overhung Load Fra (kN)
45	30	2900	64	-	-	-	-	-	-	6470	42.49	30.70	-	-	-
		1450	32	-	-	-	-	-	-	7965	26.15	38.90	15873	52.86	39.10
		960	21	-	-	-	-	-	-	9063	19.35	45.00	16216	35.12	47.30
		725	16	-	-	-	-	-	-	9869	15.86	49.60	16286	26.55	53.60
50	31	2900	58	-	-	-	-	-	-	7369	42.49	31.10	-	-	-
		1450	29	-	-	-	-	-	-	9073	26.16	39.50	16031	49.43	40.50
		960	19	-	-	-	-	-	-	10323	19.35	45.80	16153	32.39	49.20
		725	15	-	-	-	-	-	-	10617	14.98	51.20	16222	24.49	55.70
56	32	2900	52	-	-	-	-	-	-	6965	37.47	32.70	14174	72.85	33.30
		1450	26	-	-	-	-	-	-	8575	23.06	41.50	16169	41.55	43.80
		960	17	-	-	-	-	-	-	9756	17.07	48.00	16281	27.21	53.00
		725	13	-	-	-	-	-	-	10120	13.32	53.50	16343	20.56	60.00
63	33	2900	46	-	-	-	-	-	-	7933	37.46	33.20	15310	72.85	32.10
		1450	23	-	-	-	-	-	-	9767	23.06	42.10	16108	38.22	45.60
		960	15	-	-	-	-	-	-	10617	16.30	49.40	16216	25.09	55.10
		725	12	-	-	-	-	-	-	10617	12.27	55.70	16277	18.96	62.20
71	34	2900	41	-	-	-	-	-	-	7641	31.67	35.60	15403	63.92	35.60
		1450	20	-	-	-	-	-	-	9408	19.50	45.20	16227	33.67	48.20
		960	14	-	-	-	-	-	-	10120	13.64	53.00	16328	22.03	58.20
		725	10	-	-	-	-	-	-	10120	10.27	56.00	16385	16.54	62.20
80	35	2900	36	-	-	-	-	-	-	8704	31.67	36.20	15958	61.31	36.60
		1450	18	-	-	-	-	-	-	10617	19.32	46.00	16164	31.05	50.20
		960	12	-	-	-	-	-	-	10617	12.56	55.10	16263	20.32	60.40
		725	9	-	-	-	-	-	-	10617	9.46	56.00	16317	15.34	62.20
90	36	2900	32	-	-	-	-	-	-	8354	27.63	38.30	16102	51.61	39.50
		1450	16	-	-	-	-	-	-	10120	16.73	48.70	16290	26.11	54.00
		960	11	-	-	-	-	-	-	10120	10.88	56.00	16380	17.07	62.20
		725	8	-	-	-	-	-	-	10120	8.19	56.00	16430	12.89	62.20
100	37	2900	29	4130	13.34	32.00	6370	19.62	43.00	9516	27.63	38.80	16043	47.61	41.20
		1450	15	4130	6.67	32.00	6370	9.81	43.00	10617	15.41	50.60	16226	24.08	56.10
		960	10	4130	4.42	32.00	6370	6.49	43.00	10617	10.02	56.00	16313	15.74	62.20
		725	7	4130	3.34	32.00	6370	4.91	43.00	10617	7.54	56.00	16361	11.88	62.20
112	38	2900	26	4130	12.00	32.00	6400	17.74	43.00	8801	23.76	41.40	16166	41.96	43.60
		1450	13	4130	6.00	32.00	6400	8.87	43.00	10120	13.66	53.00	16337	21.20	59.20
		960	9	4130	3.97	32.00	6400	5.87	43.00	10120	8.88	56.00	16417	13.85	62.20
		725	6	4130	3.00	32.00	6400	4.44	43.00	10120	6.69	56.00	16463	10.46	62.20
125	39	2900	23	4220	10.16	32.00	7250	17.80	43.00	10024	23.76	41.80	16105	38.70	45.40
		1450	12	4220	5.08	32.00	7250	8.90	43.00	10617	12.58	55.10	16271	19.55	61.40
		960	8	4220	3.36	32.00	7250	5.89	43.00	10617	8.18	56.00	16349	12.77	62.20
		725	6	4220	2.54	32.00	7250	4.45	43.00	10617	6.16	56.00	16393	9.64	62.20
140	40	2900	21	4220	9.14	32.00	7250	16.02	43.00	9664	20.56	44.40	16219	34.72	47.50
		1450	10	4220	4.57	32.00	7250	8.01	43.00	10120	10.76	56.00	16375	17.53	62.20
		960	7	4220	3.03	32.00	7250	5.30	43.00	10120	7.00	56.00	16449	11.45	62.20
		725	5	4220	2.29	32.00	7250	4.01	43.00	10120	5.27	56.00	16490	8.64	62.20
160	41	2900	18	4310	8.52	32.00	6400	12.44	43.00	10617	19.83	45.50	16156	32.03	49.50
		1450	9	4310	4.26	32.00	6400	6.22	43.00	10617	9.91	56.00	16308	16.16	62.20
		960	6	4310	2.82	32.00	6400	4.12	43.00	10617	6.45	56.00	16379	10.56	62.20
		725	5	4310	2.13	32.00	6400	3.11	43.00	10617	4.85	56.00	16409	7.97	62.20
180	42	2900	16	4310	7.70	32.00	6400	10.80	43.00	10120	17.02	48.40	16283	26.90	53.30
		1450	8	4310	3.85	32.00	6400	5.40	43.00	10120	8.51	56.00	16421	13.56	62.20
		960	5	4310	2.55	32.00	6400	3.58	43.00	10120	5.53	56.00	16486	8.86	62.20
		725	4	4310	1.93	32.00	6400	2.70	43.00	10120	4.17	56.00	16523	6.68	62.20
200	43	2900	15	4230	6.48	32.00	7250	11.24	43.00	10617	15.68	50.30	16219	24.81	55.40
		1450	7	4230	3.24	32.00	7250	5.62	43.00	10617	7.84	56.00	16353	12.51	62.20
		960	5	4230	2.15	32.00	7250	3.72	43.00	10617	5.10	56.00	16416	8.17	62.20
		725	4	4230	1.62	32.00	7250	2.81	43.00	10617	3.84	56.00	16451	6.16	62.20
225	44	2900	13	4230	5.86	32.00	7250	9.76	43.00	10120	13.44	53.30	16334	21.31	59.00
		1450	6	4230	2.93	32.00	7250	4.88	43.00	10120	6.72	56.00	16459	10.74	62.20
		960	4	4230	1.94	32.00	7250	3.23	43.00	10120	4.37	56.00	16517	7.01	62.20
		725	3	4230	1.47	32.00	7250	2.44	43.00	10120	3.29	56.00	16549	5.28	62.20
250	45	2900	12	4310	5.62	32.00	6400	8.00	43.00	10617	12.38	55.50	16289	19.65	61.30
		1450	6	4310	2.81	32.00	6400	4.00	43.00	10617	6.19	56.00	16389	9.90	62.20
		960	4	4310	1.86	32.00	6400	2.65	43.00	10617	4.03	56.00	16445	6.46	62.20
		725	3	4310	1.41	32.00	6400	2.00	43.00	10617	3.03	56.00	16447	4.87	62.20
280	46	2900	10	4310	5.00	32.00	6400	7.46	43.00	10120	10.93	56.00	16379	17.19	62.20
		1450	5	4310	2.50	32.00	6400	3.73	43.00	10120	5.47	56.00	16489	8.65	62.20
		960	3	4310	1.66	32.00	6400	2.47	43.00	10120	3.55	56.00	16542	5.65	62.20
		725	3	4310	1.25	32.00	6400	1.87	43.00	10120	2.68	56.00	16560	4.25	62.20
315	47	2900	9	4230	4.28	32.00	7250	7.22	43.00	10617	10.07	56.00	16311	15.85	62.20
		1450	5	4230	2.14	32.00	7250	3.61	43.00	10617	5.03	56.00	16419	7.98	62.20
		960	3	4230	1.42	32.00	7250	2.39	43.00	10617	3.27	56.00	16470	5.20	62.20
		725	2	4230	1.07	32.00	7250	1.81	43.00	10617	2.46	56.00	16498	3.92	62.20
360	50	2900	8	4230	3.80	32.00	7250	6.74	43.00	-	-	-	-	-	-
		1450	4	4230	1.90	32.00	7250	3.37	43.00	-	-	-	-	-	-
		960	3	4230	1.26	32.00	7250	2.23	43.00	-	-	-	-	-	-
		725	2	4230	0.95	32.00	7250	1.69	43.00	-	-	-	-	-	-

Series F Gearboxes : Reducer dimensions

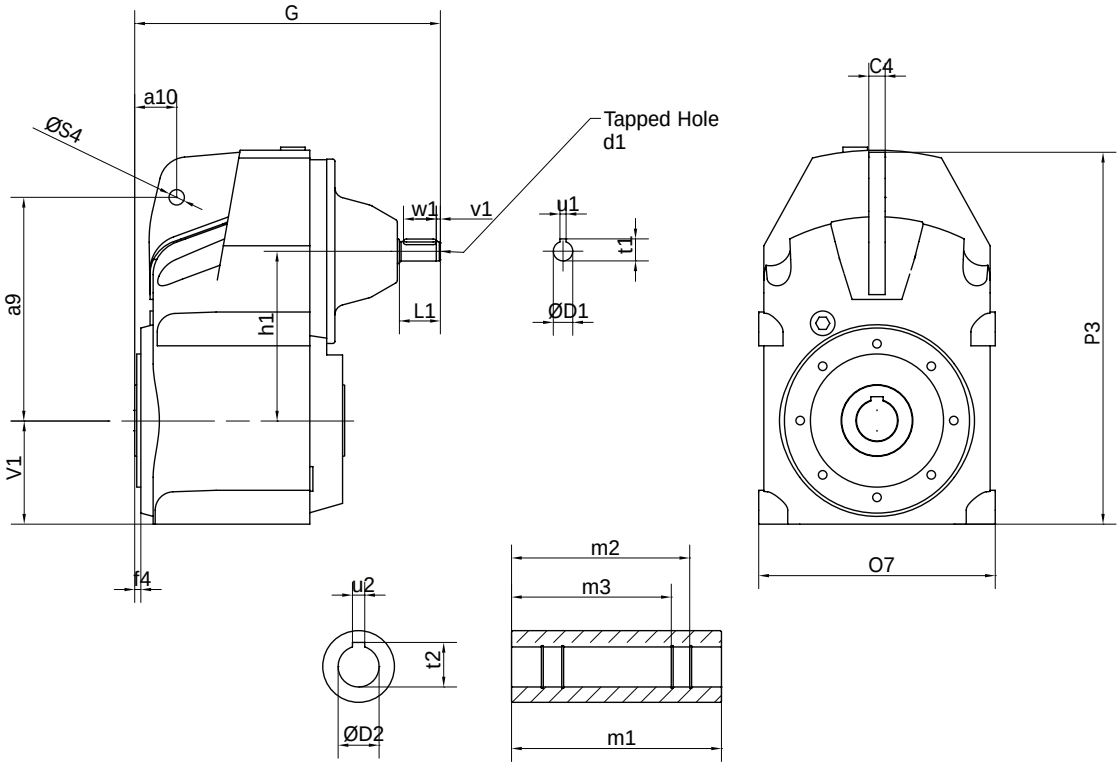

Unit Size	Reduction	a9	a10	C4	f4	h1	K1	O7	P3	S4	V1	Weight
780	Double	140	25	15	5	96	231	150	224	15	59	13
	Triple						246					14
781	Double	158	32	16	5	121	252	171	273	15	76	20
	Triple						265					21
782	Double	170	32	16	5	121	252	171	273	15	76	21
	Triple						265					22
783	Double	198	41	16	5	144	288	206	318	15	80	31
	Triple						296					32
784	Double	218	41	16	6	165	299	231	365	15	101	45
	Triple						307					46
785	Double	278	50	20	7	200	337	282	442	24	127	70
	Triple						349					77
786	Double	346	62	26	3	243	418	346	536	24	156	115
	Triple						403					121
787	Double	395	70	30	5	274	491	400	612	27	175	171
	Triple						493					180
788	Double	485	88	36	5.5	332	576	470	748	27	216	261
	Triple						578					270

Unit Size		Input Shaft						
		ØD1	L1	t1	u1	v1	w1	d1
780	Double	16 k6	40	18.0	5	4	32	M5x0.8 x 12 deep
	Triple	16 k6	40	18.0	5	4	32	M5x0.8 x 12 deep
781	Double	16 k6	40	18.0	5	4	32	M5x0.8 x 12 deep
	Triple	16 k6	40	18.0	5	4	32	M5x0.8 x 12 deep
782	Double	16 k6	40	18.0	5	4	32	M5x0.8 x 12 deep
	Triple	16 k6	40	18.0	5	4	32	M5x0.8 x 12 deep
783	Double	19 k6	40	21.5	6	4	32	M6x1.0 x 16 deep
	Triple	16 k6	40	18.0	5	4	32	M5x0.8 x 12 deep
784	Double	19 k6	40	21.5	6	4	32	M6x1.0 x 16 deep
	Triple	16 k6	40	18.0	5	4	32	M5x0.8 x 12 deep
785	Double	24 k6	50	27.0	8	5	40	M8x1.25 x 18 deep
	Triple	19 k6	40	21.5	6	4	32	M6x1.0 x 16 deep
786	Double	28 k6	60	31.0	8	5	50	M10x1.5 x 22 deep
	Triple	24 k6	50	27.0	8	5	40	M8x1.25 x 18 deep
787	Double	38 k6	80	41.0	10	5	70	M12x1.75 x 28 deep
	Triple	28 k6	60	31.0	8	5	50	M10x1.5 x 22 deep
788	Double	42 k6	110	45.0	12	10	70	M16x2.0 x 36 deep
	Triple	38 k6	80	41.0	10	5	70	M12x1.75 x 28 deep

Unit Size	Hollow Output Bore					
	ØD2	t2	u2	m1	m2	m3
780	25	29.0	8	117.5	105	89
781	30	33.5	8	156.5	122	105
782	35	38.5	10	156.5	132	122
783	40	43.5	12	179	174	142
784	40	43.5	12	205	174	156
785	50	54.0	14	233.5	198	183
786	60	64.6	18	270	230	210
787	70	75.0	20	330	270	-
788	80	85.5	22	370	313	-

Series F Gearboxes : Exact ratios

DOUBLE REDUCTION

Ratio Code	780	781	782	783	784	785	786	787	788	789	790
01	-	-	-	-	-	-	-	-	-	4.530	4.630
02	-	-	-	4.841	-	-	-	5.085	5.107	5.160	5.000
03	-	-	-	-	-	-	-	-	-	5.530	5.730
04	5.903	-	-	6.806	-	-	-	6.567	6.433	6.300	6.190
05	7.974	6.262	6.262	7.628	6.224	6.772	6.959	7.000	7.133	7.200	7.310
06	-	-	-	-	-	-	-	7.846	7.758	8.200	7.900
07	9.069	8.784	8.784	8.563	8.750	9.380	9.865	8.807	8.810	8.750	9.190
08	10.27	9.680	9.680	10.87	9.807	10.54	10.96	10.13	9.772	9.970	9.920
09	-	-	-	-	-	-	-	11.35	11.48	11.33	11.55
10	13.14	10.99	10.99	12.33	11.009	11.59	12.19	12.68	12.39	12.90	12.48
11	14.16	13.96	13.96	14.70	13.98	15.13	15.76	14.66	14.46	13.66	13.88
12	17.88	15.86	15.86	16.93	15.85	17.21	17.70	16.37	15.61	15.56	14.99
13	-	-	-	-	-	-	-	17.58	18.07	17. 96	17.77
14	20.27	19.46	19.46	19.69	18.90	20.89	21.70	20.04	20.46	20.46	19.19
15	23.16	21.59	21.59	22.03	21.76	22.98	24.45	22.70	22.76	22.42	22.84
16	25.77	24.52	24.52	23.48	25.31	26.41	28.46	25.88	25.77	25.54	24.67
17	28.41	27.86	27.86	27.83	28.32	29.95	31.57	28.41	28.04	28.40	28.92
18	31.26	30.68	30.68	29.71	30.18	33.03	34.55	31.56	31.16	32.34	31.23
19	36.63	35.30	35.30	36.87	35.77	37.83	39.09	36.69	35.32	34.96	35.61
20	43.94	38.37	38.37	43.47	38.19	42.77	44.13	40.76	39.25	39.83	38.46
21	-	-	-	-	-	-	-	44.58	44.43	45.04	43.75
22	51.22	46.07	46.07	47.60	47.40	49.59	53.49	49.22	51.19	51.30	47.26
23	56.91	55.28	55.28	58.34	55.89	59.14	62.38	57.58	55.97	51.85	53.75
24	68.54	62.29	62.29	65.02	61.20	64.77	68.52	63.56	64.49	59.06	58.06
25	78.56	72.41	72.41	72.92	75.00	77.72	83.97	67.71	69.24	-	-
26	-	-	-	-	-	-	-	76.14	74.39	-	-
27	89.28	82.18	82.18	-	83.59	89.42	91.70	87.44	87.21	-	-
28	-	93.43	93.43	-	93.75	99.36	105.60	98.32	93.70	-	-

TRIPLE REDUCTION

Ratio Code	780	781	782	783	784	785	786	787	788	789	790
30	-	-	-	-	-	-	-	-	-	45.60	44.96
31	-	-	-	-	-	-	-	-	-	51.94	48.56
32	-	-	-	-	-	-	-	-	-	55.67	58.27
33	-	-	-	-	-	-	-	-	-	63.42	62.94
34	-	-	-	-	-	-	-	-	-	72.26	72.17
35	-	-	-	78.80	-	-	-	-	-	82.30	77.95
36	92.02	-	-	86.80	-	-	-	-	-	90.56	93.43
37	101.50	99.52	99.52	99.86	101.40	108.60	114.20	102.50	102.80	103.15	100.91
38	111.60	109.70	109.70	108.60	111.60	115.70	124.90	113.90	114.20	110.94	115.39
39	130.80	120.70	120.70	130.30	128.40	137.10	141.30	132.30	129.50	126.37	124.63
40	-	-	-	-	-	-	-	147.00	143.90	140.77	139.88
41	156.90	141.50	141.50	156.40	139.60	146.40	159.50	160.80	162.90	160.35	151.08
42	182.90	169.70	169.70	176.20	167.60	181.70	193.40	177.50	187.70	178.07	181.27
43	203.30	197.80	197.80	204.90	201.10	214.20	225.50	207.70	205.20	202.84	195.79
44	244.80	219.80	219.80	232.50	226.60	234.60	247.70	229.30	236.40	225.49	229.54
45	-	-	-	-	-	-	-	244.20	253.90	256.85	247.92
46	280.60	264.70	264.70	264.30	263.40	287.50	303.60	274.60	272.70	277.27	285.33
47	318.80	303.40	303.40	-	298.90	320.40	331.50	315.40	319.80	315.83	308.18
48	-	344.80	344.80	-	339.80	359.40	381.80	354.70	343.60	-	-

Series F Gearboxes : B14 Flange dimensions

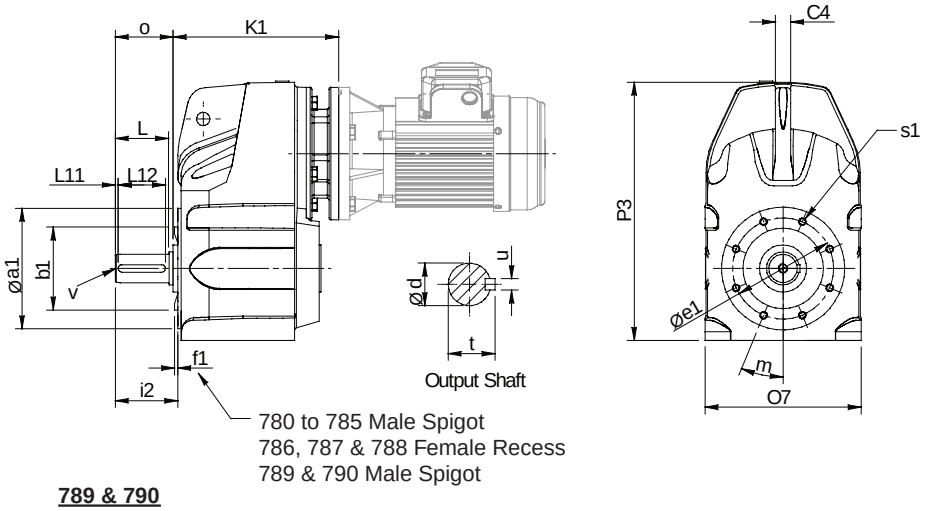

789 & 790

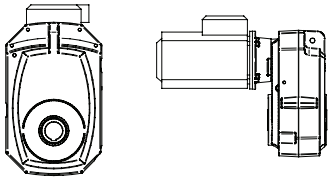

Please Note: The appearance of the 789 & 790 units is different to the other units. See pictures above.

Unit Size	a1	b1	C4	e1	f1 Male	a9	m	o	O7	P3	s1	Output Shaft							
												D2	i2	L2	v2	w2	t2	u2	d2
780	117	85 j6	15	107	3	140	67.5	-	150	224	4xM8x12	-	-	-	-	-	-	-	-
781	122	85 j6	16	107	3	158	22.5	50	171	273	4xM8x12	25	55	47	3	40	28	8	M10x22
782	122	85 j6	16	107	3	170	22.5	60	171	273	4xM8x12	30	65	56	3	50	33	8	M12x28
783	145	105 j6	16	125	3	198	30	70	206	318	6xM10x17	35	75	66	3	60	38	10	M16x36
784	181	130 j6	16	150	4	218	0	81	231	365	8xM10x20	40	87	76	3	70	43	12	M16x36
785	181	130 j6	20	150	4	278	0	101	282	442	8xM10x20	50	108	95	3	80	53.5	14	M16x36
786	227	150 H7	26	195	5*	346	22.5	120	346	536	8xM10x20	60	123	114	3	100	64	18	M20x42
787	280	180 H7	30	230	6*	395	0	141	400	612	6xM16x27	70	146	135	3	110	74.5	20	M20x42
788	310	210 H7	36	280	7*	485	0	172	470	748	10xM20x35	90	177.5	172	5	140	95	25	M20x42
789	320	230 j7	40	265	5	485	0	208	498	784	8xM20x35	90	498	141	14	141	95	25	M24x50
790	350	250 j7	50	300	5	550	22.5	253	550	877	8xM20x35	110	550	160	25	160	116	28	M24x50

*Female spigot

G DIMENSION/WEIGHT

Motor Frame Size	780				781 & 782				783				784				785			
	Double		Triple		Double		Triple		Double		Triple		Double		Triple		Double		Triple	
	G	kg	G	kg	G	kg	G	kg	G	kg	G	kg	G	kg	G	kg	G	kg	G	kg
63	154	12	169	13	175	19	188	20	189	27	219	28	200	42	230	43	-	-	250	67
71	158	11	173	12	179	19	192	20	195	27	223	28	206	42	234	43	-	-	256	67
80	171	12	186	13	192	19	205	20	213	27	236	28	224	42	247	43	259	63	274	68
90	181	12	196	13	202	20	215	21	223	28	246	29	234	42	257	43	269	64	284	69
100	189	15	204	16	210	23	223	24	250	31	254	32	261	45	265	46	281	65	311	70
112	189	15	204	16	210	23	223	24	250	31	254	32	261	45	265	46	281	65	311	70
132	-	-	-	-	-	-	-	-	250	32	-	-	261	46	-	-	303	65	311	70
160	-	-	-	-	-	-	-	-	-	-	-	-	-	-	-	-	311	65	-	-

Motor Frame Size	786				787				788				789				790			
	Double		Triple		Double		Triple		Double		Triple		Double		Triple		Double		Triple	
	G	kg	G	kg	G	kg	G	kg	G	kg	G	kg	G	kg	G	kg	G	kg	G	kg
63	-	-	-	-	-	-	-	-	-	-	-	-	-	-	-	-	-	-	-	-
71	-	-	-	-	-	-	-	-	-	-	-	-	-	-	-	-	-	-	-	-
80	340	114	325	116	354	174	380	184	-	-	441	273	-	-	-	-	-	-	-	-
90	340	114	335	116	354	174	380	184	-	-	441	273	-	-	-	-	-	-	-	-
100	346	116	347	118	360	174	386	184	390	254	447	273	-	-	446	320	-	-	-	-
112	346	116	347	1189	360	174	386	184	390	254	447	273	-	-	446	320	-	-	-	-
132	346	119	369	121	360	174	-	-	390	254	447	273	-	-	446	320	-	-	524	506
160	376	119	-	-	395	181	-	-	425	263	482	280	-	345	476	332	-	500	496	495
180	-	-	-	-	395	181	-	-	425	263	482	280	491	345	476	332	516	500	496	495
200	-	-	-	-	395	195	-	-	425	263	482	281	491	345	-	-	516	500	524	506
225	-	-	-	-	422	195	-	-	452	277	509	295	521	359	-	-	546	514	526	509
250	-	-	-	-	-	-	-	-	-	-	-	-	521	375	-	-	546	530	-	-
280	-	-	-	-	-	-	-	-	-	-	-	-	-	-	-	-	546	530	-	-

Series F Gearboxes : Overhung Load Capacities

ALLOWABLE OVERHUNG LOADS

Units are fitted with input and output bearings of ample proportions to cater for the radial and thrust loads imposed by the gear loads, leaving sufficient capacity for taking overhung loads. The calculated overhung load should be compared with the value in the selection tables.

These values may be exceeded at lower input speeds or if limited bearing lives are acceptable. In cases where higher overhung load capacities are necessary consult your distributor, quoting details of power, speed, direction of gearbox rotation, angle of application of load, distance of load application from gearbox and acceptable bearing life.

Permissible overhung loads vary according to the direction of rotation. The values tabulated are for the most unfavourable direction with the unit transmitting full rated power and the load applied midway along the shaft extension. Hence they can sometimes be increased for a more favourable direction of rotation, or if the power transmitted is less than the rated capacity of the gear unit, or if the load is applied nearer to the gear unit case. Refer to your Distributor for further details.

In any event, the sprocket, gear etc. should be positioned as close as possible to the gear unit case in order to reduce bearing loads and shaft stresses, and to prolong life. All units will accept a 100% momentary overload on stated capacities.

To determine the overhung load when a sprocket, gear or 'V' pulley is fitted to either shaft, one of the following formulae may be used in the absence of accurate information.

(1) Calculation on a basis of Torque

$$\text{Overhung load (N)} = \frac{M_2 \times 1000 \times K}{r}$$

(2) Calculation on a basis of Power

$$\text{Overhung load (N)} = \frac{P_2 \times 9550 \times 1000 \times K}{n_2 \times r}$$

Where:
M_2 = Absorbed torque at shaft in Nm.
P_2 = Absorbed power (kW).
r = Pitch radius of sprocket, gear or 'V' pulley in mm.
n_2 = Rev/min of shaft.
K = Application factor -
1.00 for a sprocket
1.25 for a gear or timing pulley
1.50 for a 'V' pulley

Overhung loads may be reduced by one of the following methods:

Increase the diameter of the sprocket, gear or pulley within reasonable limits.

Mount the sprocket, gear or pulley on a separate shaft, supported on it's own bearings and couple to gearbox output shaft by means of a Fenner shaft coupling.

Axial Thrust Capacities (N)

No check or calculation is required for axial loads (Fa) towards or away from the unit up to 50% of the permissible overhung load. If the axial thrust exceeds these values or if there ia a combination of axial thrust loads and overhung loads please refer to your local Authorised Distributor.

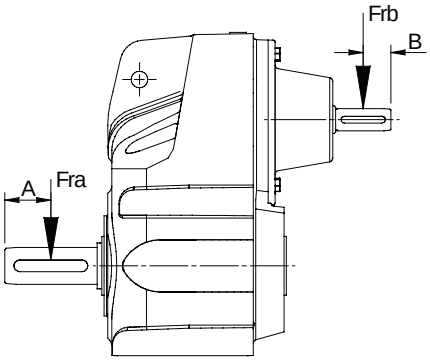

DISTANCE MIDWAY ALONG SHAFT EXTENSION

Unit Size	No. of Reductions	Dimension A (mm)	Dimension B (mm)
780	2-3	-	20
781	2-3	23.5	20
782	2-4	28	20
783	2-3	33	20
	4	32	20
784	2-4	38	20
785	2	47.5	25
	3-4	47.5	20
786	2	55	30
	3	55	25
	4	55	20
787	2	68	40
	3	65	30
	4	65	20
788	2	85	35
	3	85	40
	4	85	25
789	2-3	70	-
790	2-3	80	-

ALLOWABLE INPUT SHAFT OVERHUNG LOADS Frb (KN) @1450 Rev/Min.

Unit Size	No. of Reductions	Dimension A (mm)	Dimension B (mm)
780	1.5	1.5	1.5
781	1.5	1.5	1.5
782	1.5	1.5	1.5
783	1.25	1.5	1.5
784	1.05	1.5	1.5
785	2.1	1.25	1.5
786	3.1	2.1	1.5
787	3.5	3.1	1.5
788	4.5	3.5	1.8
789	N/A	N/A	N/A
790	N/A	N/A	N/A

For larger units please consult your local authorised distributor.

Series F Gearboxes : Installation and Maintenance

SHAFT MOUNTING

Ensure that the shaft on to which the gear unit is to be mounted and the gear unit bore are clean and free from burrs. Liberally smear the shaft and bore with lubricants to aid assembly and prevent fretting corrosion. Slide the unit on to the driven shaft and secure unit onto the shaft using chosen method. Fit side fitting key. DO NOT USE TAPER OR TOP FITTING KEY.

FLANGE MOUNTING

The Fenner Series F Mk II is designed primarily as a shaft monted gearbox. However, it can be supplied with a single or double output shaft and a mounting flange if required.

LUBRICATION

Sizes 780 to 784 are pre-filled for mounting position B3 with a quantity of EP mineral oil (Shell Omala 320). However, if the unit is supplied without lubricant then the oil quantity is obtained from the table at the bottom of page 278.

Other mounting positions must be specified on order. Sizes 785 to 790 are supplied without oil. Before running they should be filled with an appropriate amount of the correct lubricant shown in the table, dependent on the mounting position, see chart. WARNING: Do not over fill as excess lubricant may cause overheating and leakage.

For Lubrication quantity, recommended grades and viscosity tables see table opposite.

OIL CHANGES

Sizes 780 to 783 are lubricated for life except when the units are required to work in an explosive atmosphere (94/9/EC Atex 100a Group II category 2 zones 1 & 21 & category 3 zones 2 & 22) See separate leaflet for recommendations. All other sizes will require an oil change depending on the unit operating temperature. Initial fill of oil should be changed in a new gear unit after 1000 hours operation or one year or half the life in the table below whichever is the soonest.

BREATHERS/MOUNTING POSITIONS

All sizes of Series F are supplied for operation without a breather. On sizes 785 and above the unit should be filled to the recommended level for operating position being used and the blanking plug replaced in the filling position indicated below.

MOTOR CONNECTIONS TO MAINS

Connection of the electric motor to the mains supply should be made by a qualified person.

The current rating of the motor will be identified on the motor plate and correct sizing of the cables to electrical regulations is essential.

STARTING UP

Prior to starting up the following procedure should be followed

1: Check Oil level (784 and above) top up if necessary
2: Ensure all safety devices are in place (i.e. guards fitted)
3: Remove any safety devices fitted to prevent machine rotation

Starting up should be performed or supervised by suitably qualified personnel.

MOUNTING POSITIONS

Mounting B3

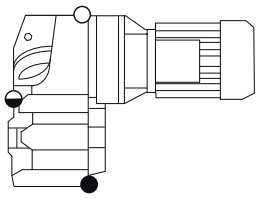

Mounting B8

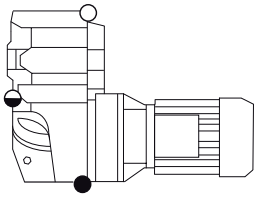

Mounting B7

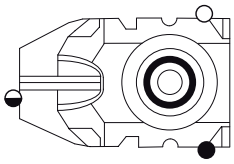

Mounting B6

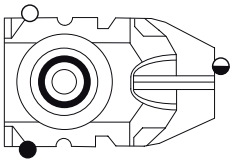

○ Ventilator/Filling Position
◒ Level Position
● Drain Position

Mounting V5

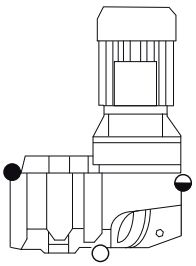

Mounting V6

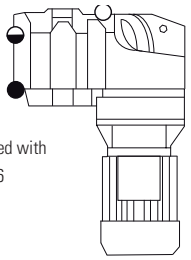

Motor must be fitted with seal for position V6

Series F Gearboxes : Installation and Maintenance

LUBRICATION VISCOSITY

ISO Viscosity	Ambient Temperature ºC			
	-5ºC to 20ºC	-30ºC to 20ºC	0ºC to 35ºC	20ºC to 50ºC
EP Mineral Oil	220	-	320	460
Synthetic Oil 1	-	220	220	320
Synthetic Oil 2	-	220	320	460

Synthetic Oil 1 = Polyalphaolefin based.
Synthetic Oil 2 = Polyglycol based

RECOMMENDED OIL GRADES

Supplier	Mineral Oils Containing EP Additives	Synthetic Lubricants Polyglycol Based	Synthetic Lubricants Polyalphaolefin based
BP	Energol GR-XP or XF	Enersyn SG-XP	Enersyn EPX
Castrol	Alpha Max or SP	Alphasyn PG	Alphasyn EP or T
Esso	Spartan EP	Glycolube	Spartan Synthetic EP
Fuchs	Renogear V or WE	Renolin PG	Renogear SG
Mobil	Mobilgear 600	Glygoyle	Mobilgear SHC
OKS	-	-	OKS 3725
Shell	Omala or Omala F	Tivela or Tivela S	Omala HD
Texaco	Meropa or Meropa WM	Synlube CLP	Pinnacle EP
Total	Carter EP	Carter SY	Carter EP/HT
Rocol	Sapphire Hi-Torque	-	-

OIL RENEWAL PERIODS

Unit Op Temp ºC	Renewal Period (Hours)	
	Mineral Oil	Synthetic Oil
75 or less	17000 or 3 yrs	26000 or 3 yrs
80	12000 or 3 yrs	26000 or 3 yrs
85	8500 or 3 yrs	21000 or 3 yrs
90	6000 or 2 yrs	15000 or 3 yrs
95	4200 or 17 mths	10500 or 3 yrs
100	3000 or 12 mths	7500 or 2.5 yrs
105	2100 or 8 mths	6200 or 2 yrs
110	1500 or 6 mths	2100 or 18 mths

LUBRICANT QUANTITY (LITRES)

ISO Viscosity	780		781		782		783		784		785		786		787		788		789		790	
	Double	Triple	Double	Triple	Double	Triple	Double	Triple	Double	Triple	Double	Triple	Double	Triple	Double	Triple	Double	Triple	Double	Triple	Double	Triple
B3	0.5	0.6	0.8	0.8	0.8	0.8	1.5	1.6	1.5	1.6	2.0	2.1	2.6	2.7	4.2	4.4	10.5	11.5	11	14	17	18
B8	0.8	0.9	1.2	1.3	1.2	1.3	1.8	1.9	1.8	1.9	2.0	2.1	2.9	3.0	6.3	6.5	12.0	12.0	22	24	31	33
B7	0.6	0.7	0.7	0.7	0.7	0.7	1.6	1.7	1.6	1.7	1.9	2.0	2.7	2.8	5.4	5.6	12.0	12.0	22	24	31	33
B6	0.8	0.9	1.2	1.2	1.2	1.2	1.8	1.9	1.8	1.9	1.7	1.8	3.0	3.1	7.3	7.5	12.0	12.0	19	21	28	30
V5	0.7	0.7	1.1	1.1	1.1	1.1	2.0	2.1	2.0	2.1	2.2	2.3	3.2	3.3	6.8	6.8	16.8	16.8	32	32	47	47
V6	1.0	1.1	1.4	1.6	1.4	1.6	2.6	2.7	2.6	2.7	2.8	2.9	4.7	4.8	9.3	9.7	16.4	16.5	26	28	38	40

Oil quantities are aproximate, fill gearbox until oil escapes from level plug hole. Do not over fill as excess lubricant may cause overheating and leakage.

Series F Gearboxes : Torque Bush Dimensions

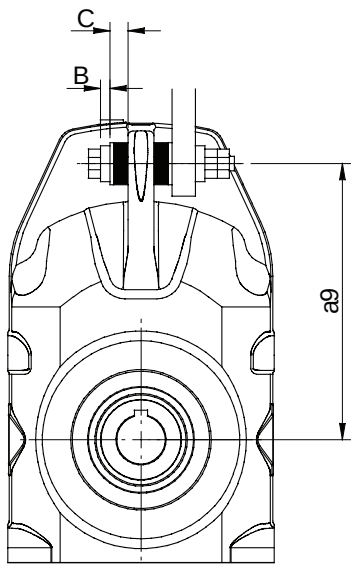

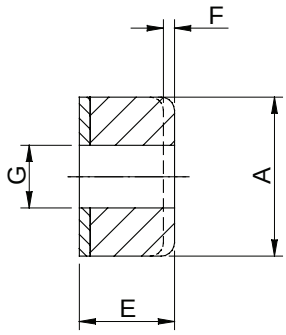

Unit Size	A	B (Min Thickness)	C	a9	E	F	G
780	40	2	18.50	140	20	1.50	13
781	40	2	18	158	20	2	13
782	40	2	18	170	20	2	13
783	40	2	18	198	20	2	13
784	40	2	18	218	20	2	13
785	62	10	30	278	33	3	23
786	62	10	29	346	33	4	23
787	82	12	40	395	44	4	26
788	82	12	38	485	44	5	26
789	82	12	38	485	44	6	26
790	102	12	48	550	54	6	33

ACCESSORY PRODUCT CODES

Unit Size	780	781	782	783	784	785	786	787	788
Torque Bush	881A9600	881A9600	881A9600	881A9600	881A9600	883A9600	883A9600	884A9600	884A9600
Single Output Shaft	-	890A9700	891A9700	892A9700	893A9700	894A9700	883A9700	884A9700	885A9700
Double Output Shaft	-	890A9800	891A9800	892A9800	893A9800	894A9800	883A9800	884A9800	897A9800
Output Flange	871A9900	871A9900	871A9900	892A9300	893A9300	894A9300	875A9900	876A9900	877A9900

For accessory codes of 789 and 790 units, please consult your local Authorised distributor.

Series F Gearboxes : Ordering Instructions

All gearboxes and geared motors are identified by an eight digit code for a unit with a standard electric motor, if a special motor type is required a ninth digit is added to the end of the normal code. These codes should be included on all enquiries, correspondence and orders.
The code is made up as follows:-

First THREE digits: Gearmotor type and size.

Select from the tables on pages 250-261 and 266-272.

Fourth digit: Type of assembly required

A: Foot mounted motorised
B: Flange mounted motorised
D: Foot mounted with input shaft
E: Flange mounted with input shaft
G: Foot mounted - motor ready
H: Flange mounted - motor ready

Fifth/Sixth digit: Ratio code

1. Assemblies A and B use the complete eight digit code obtained directly from the selection tables.
2. Exact gear ratios can be found on page 274.
3. For selection and specification of D & E reducer units, select from tables on page 266-272 and create code as shown.
4. For selection of motor ready units (types G & H) use motor selection tables and replace motor codes with frame codes.

Seventh/Eighth digit: Type of drive code

1. Motorised units - use complete code from selection tables with if applicable, additional ninth digit for motor type.
2. Input Reducer assembly - use 00.
3. Motor ready units are supplied to fit standard IEC motors. Insert frame code from the table below.

Code	Frame	Flange
63C	63	B14
63D	63	B5
71C	71	B14
71D	71	B5
80C	80	B14
80D	80	B5
90C	90	B14
90D	90	B5
10C	100	B14
10D	100	B5
11C	112	B14
11D	112	B5
13C	132	B14
13D	132	B5
16D	160	B5
18D	180	B5
20D	200	B5
22D	225	B5
25D	250	B5

Ninth digit: Type of motor variant

Use eight digit code obtained from selection tables for required motor power and speed and then add the relevant letter code from table below of the motor variant required.

Code	Additional Feature
A	Anti-condensation heaters fitted
B	Backstop Fitted
M	Brake motor
N	Brake motor with Hand Release
Q	Refer to Original Quote - Special
S	Single Phase motor
T	Fitted with Thermistors
X	Fitted with Variator
Z	Fitted with Force Vent unit

Section 9:

Gearboxes: Series K

The Fenner® Series K incorporates all the core design features in a highly efficient yet flexible bevel helical drive.

- Drives up to 90kW
- Highly efficient right angled drive
- Ratios from 8:1 to 7250:1 available
- Dimensionally interchangeable with the market leaders
- Accepts standard IEC motors without modification
- ATEX certification available

Geared Drives: Design Data Required	
Motorised (integral motor) or non-motorised?	> If motorised: electrical supply available any special motor features required (brake, thermistors, flameproof etc.) > If non-motorised: type of prime mover rotational speed of prime mover power rating of prime mover is an input shaft coupling required? If so, prime mover shaft dia.
Shaft mounting or flange mounted?	> If shaft mounted, machine shaft diameter/length > if flange mounted, is an output shaft and coupling required?
Type of driven machine	
Rotational speed of driven machine	> constant or variable over what range?
Power absorbed by driven machine (or required output torque)	
Hours/day duty & start/stop frequency	

Series K	Page
Motorised Selection	283
Motorised Dimensions	292
Non Motorised Selection	295
Non Motorised Dimensions	302
Exact Ratios	304
Overhung Load Capacities	305
Accessories	306
B14 Flange Dimensions	308
Installation & Maintenance	309
Ordering Instructions	311

Visit www.fptgroup.com

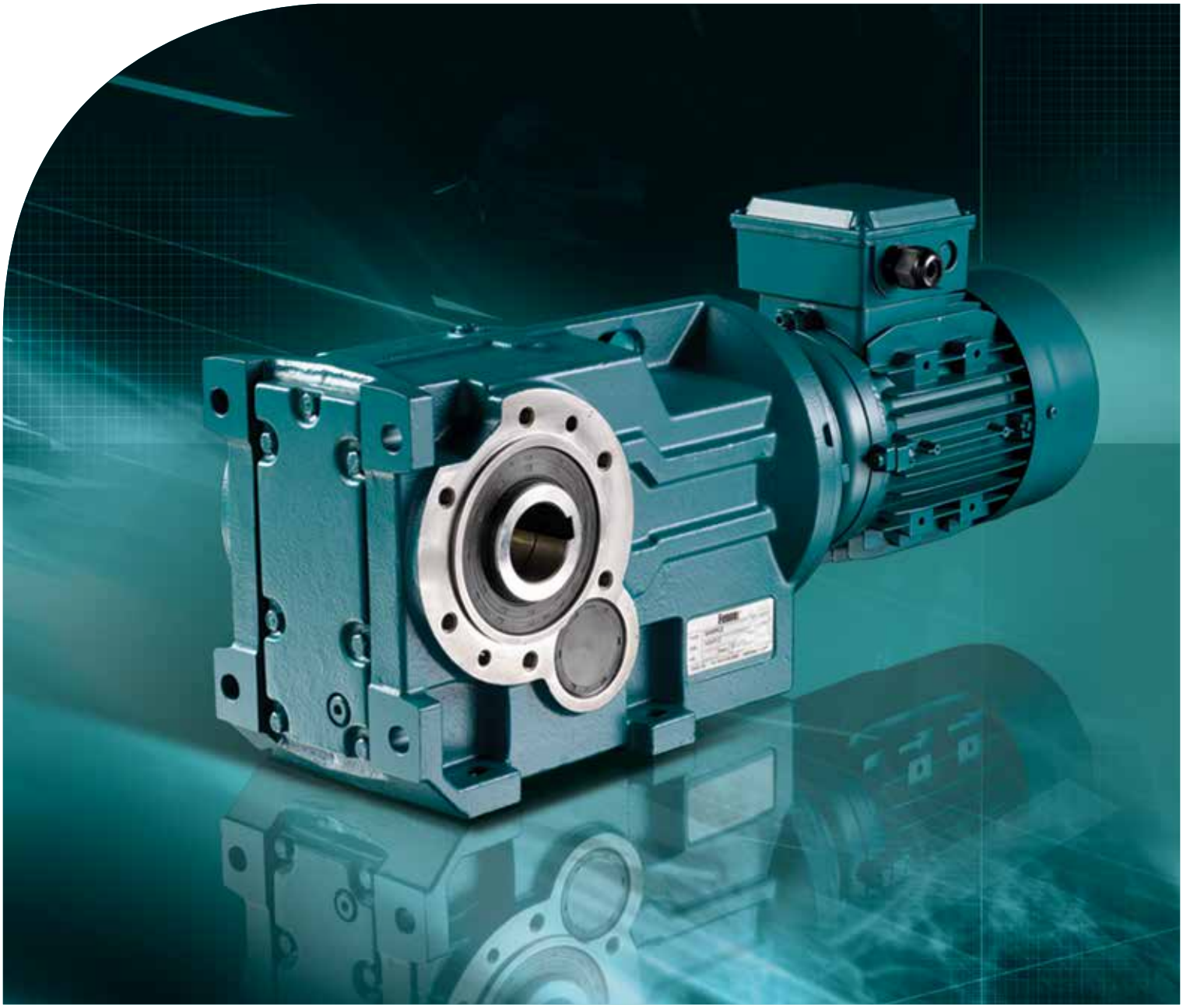

SERIES K

Highly Efficient, Versatile.

Compact Solutions

- > Drives up to 90kW
- > Highly efficient right angled drive
- > Ratios from 8:1 to 7250:1 available from stock
- > Dimensionally interchangeable with the market leaders
- > Accepts standard IEC motors without modification
- > ATEX certification available

Fenner®

THE MARK OF ENGINEERING EXCELLENCE

www.fptgroup.com

Series K Gearboxes : Motorised selection

MOTORISED UNITS SELECTION PROCEDURE

(a) Service Factor
From Table 1 select the Mechanical Service Factor (Fm) applicable to the drive. If the unit is to be subjected to frequent stop/starts in excess of 10 times per day then multiply factor Fm by Factor Fs from table 2.

(b) Motor Power
Refer to the selection tables on pages 284 to 291 and choose a motor power equal to or in excess of that required, if the motor power is not known then from the formula below determine the power requirements of the driven machine and select a motor power in excess of the calculated machine absorbed power.

$$P_2 = \frac{M_2 \times n_2}{9550}$$

P_2 = machine absorbed power (kW)
M_2 = machine absorbed torque (Nm)
n_2 = machine speed (rev/min)

(c) Unit Selection
Refer to the selection tables on page 284 to 291 and choose the closest above that calculated in step (b). Then read down the column headed "Nominal Output" until a speed equal to or near to the required speed is found. On this line read across to the service factor column and check that the service factor exceeds the value from step (a). If the service factor is either lower or much higher than that required check the speeds at each side of the required speed to see if a more suitable unit and factor can be found.

(d) Overhung Loads
If the unit is to be fitted with an output shaft and an indirect drive attached to the shaft, calculate the overhung load value using the formula on page 305 and compare this value with the maximum allowable value given in column 5 of the selection tables.

If the value exceeds the maximum allowed, then either re-design the indirect drive or select a larger unit capable of supporting the overhung load.

(e) Shaft Mounted
If the unit is to be shaft mounted determine the relevant machine shaft size from the dimension tables on page 292. Torque arm dimensions can be found on page 306.

SELECTION EXAMPLE

A series K shaft mounted gearbox is required to drive a variable density mixer, which absorbs 450 Nm at 37 rpm and operates for up to 10 hours per day. The mixer stops and starts on average 4 times a day. Specify the shaft diameter required to fit the unit selected, a torque arm bracket is also required please specify the relevant product code.

(a) Service Factor
From table 1 a variable density mixer is classed as a moderately loaded machine and when running for up to 10 hours per day requires a service factor of 1.25. The machine stops and starts only 4 times a day therefore an additional stop/start factor is not required.

(b) Motor Power
To determine the required motor power use the absorbed torque and the machine shaft speed in the formula given.

$$P_2 = \frac{M_2 \times n_2}{9950}$$

Therefore the absorbed Power

$$P_2 = \frac{450 \times 37}{9550} = 1.743 \text{ kW}$$

(c) Unit Selection
The nearest standard motor power above 1.743 kW is 2.2 kW therefore we go to the 2.2 kW geared motor selections on page 286. Reading down the column headed nominal output it is found that there are 2 units listed at 37 rpm, at the first one of these read across to maximum service factor column, it can be seen that the unit size 893A1436 has a service factor of 1.51. This exceeds the 1.25 Service factor required and therefore is suitable for the application.

(d) Overhung Loads
The gearbox is to be shaft mounted therefore there are no overhung loads present.

(e) Shaft Mounted
The unit is to be shaft mounted, referring to page 292 we see that the hub bore size is 40 mm. From page 306 the torque arm bracket to suit the size 893 unit selected has a product code of 893A9600.

TABLE 1 - MECHANICAL SERVICE FACTOR (Fm)

Types of Driven Machine	Operational Hours		
	Under 3	3 to 10	Over 10
Uniform Loads Agitators and Mixers – liquid or semi-liquid Blowers – centrifugal Bottling Machines Conveyors and Elevators – uniformly loaded Cookers Laundry Washing Machines – non-reversing Line Shafts Pumps – centrifugal and gear Wire Drawing Machines	0.80	1.00	1.25
Moderate Shock Loads Agitators and Mixers – variable density Conveyors – not uniformly loaded Cranes travel motion and hoisting Drawbench Feeders – pulsating load Hoists Kilns Laundry Tumblers Lifts Pumps – reciprocating with 3 or more cylinders Pump and Paper Making Machinery Rubber Mixers and Calendars Screens – rotary Textile Machinery	1.00	1.25	1.50
Heavy Shock Loads Brick Presses Briquetting Machines Conveyors – reciprocating and shaker Crushers Feeders – reciprocating Hammer Mills Pumps – reciprocating, 1 or 2 cylinders Rubber Masticators Screens – vibrating	1.50	1.75	2.00

TABLE 2 - STARTING FACTOR (Fs)

	Start/stops per hour					
	Up to 1	5	10	40	60	>200
Factor Fs	1.00	1.03	1.06	1.10	1.15	1.20

For ATEX certified gear units please consult your local Authorised Distributor.

Series K Gearboxes : Motorised selection

Bold print indicates a 6 pole motor is used
Triple reduction, see page
Quadruple reduction see page

0.18 KW MOTOR

Nominal Output Rev/Min	Output Torque Nm	Service Factor	Unit Selection	Overhung Load N
165	10	13.65	890A0102	4269
122	13	11.39	890A0302	4688
107	15	10.50	890A0402	4882
95	17	9.71	890A0502	5076
74	22	8.19	890A0702	5481
69	24	7.77	890A0802	5606
54	30	6.56	890A1002	5913
48	34	5.98	890A1102	5916
42	39	5.46	890A1202	5917
38	43	5.03	890A1302	5917
34	48	4.63	890A1402	5952
31	53	4.21	890A1502	5957
27	62	3.60	890A1602	5963
22	74	3.00	890A1802	6000
19	87	2.58	890A1902	6000
17	96	2.33	890A2002	6000
14	116	1.60	890A2202	6000
13	127	3.30	891A2302	6000
12	132	1.20	890A2302	6000
11	151	1.03	890A2402	6000
11	147	1.52	890A3002	6000
11	144	3.06	891A2402	6000
10	156	2.83	891A3002	6000
9.4	167	1.34	890A3102	6000
9.3	171	2.57	891A3102	6000
8.3	190	1.18	890A3202	6000
8.0	196	2.25	891A3202	6000
6.9	231	1.90	891A3302	6000
6.5	243	0.92	890A3302	6000
6.0	262	0.86	890A3402	6000
5.3	299	1.48	891A3402	6000
4.8	327	1.35	891A3502	6000
4.2	375	1.18	891A3602	6000
3.9	412	1.07	891A3702	6000
3.4	473	0.93	891A3802	6000
3.1	521	0.85	891A3902	6000
3.1	522	1.58	893A3902	8000
3.0	530	1.24	892A3902	7496
2.9	551	3.03	894A3902	15000
2.8	576	1.43	893A4002	8000
2.7	584	1.13	892A4002	7496
2.7	607	2.75	894A4002	15000
2.4	671	0.98	892A4102	7496
2.4	662	1.25	893A4102	8000
2.3	698	2.39	894A4102	15000
2.2	730	0.90	892A4202	7496
2.2	719	1.15	893A4202	8000
2.1	758	2.20	894A4202	15000
1.9	835	0.99	893A4302	8000
1.9	870	1.92	894A4302	15000
1.7	931	0.89	893A4402	8000
1.6	984	1.70	894A4402	15000
1.5	1088	1.53	894A4502	15000
1.3	1249	1.34	894A4602	15000
1.2	1413	1.18	894A4702	15000
1.1	1488	1.12	894A4802	15000

0.25 KW MOTOR

Nominal Output Rev/Min	Output Torque Nm	Service Factor	Unit Selection	Overhung Load N
168	13	10.04	890A0106	4223
124	18	8.38	890A0306	4640
109	21	7.72	890A0406	4827
97	23	7.14	890A0506	5013
76	30	6.02	890A0706	5401
70	33	5.72	890A0806	5519
56	41	4.83	890A1006	5812
49	47	4.40	890A1106	5818
43	53	4.02	890A1206	5820
39	59	3.70	890A1306	5822
35	65	3.41	890A1406	5896
32	72	3.10	890A1506	5907
27	84	2.65	890A1606	5921
23	101	2.21	890A1806	6000
20	116	3.70	891A1906	6000
19	118	1.90	890A1906	6000
17	131	1.70	890A2006	6000
17	130	3.30	891A2006	6000
15	152	2.69	891A2206	6000
14	158	1.17	890A2206	6000
13	180	0.88	890A2306	6000
13	172	2.43	891A2306	6000
12	195	2.25	891A2406	6000
11	200	1.12	890A3006	6000
10	228	0.98	890A3106	6000
10	212	2.08	891A3006	6000
9.5	233	1.89	891A3106	6000
8.5	258	0.87	890A3206	6000
8.2	266	1.65	891A3206	6000
7.0	315	1.40	891A3306	6000
5.4	406	1.09	891A3406	6000
4.9	444	0.99	891A3506	6000
4.3	509	0.87	891A3606	6000
3.1	720	0.91	892A3906	7496
3.1	710	1.16	893A3906	8000
3.0	749	2.23	894A3906	15000
2.9	783	1.06	893A4006	8000
2.8	794	0.83	892A4006	7496
2.7	825	2.02	894A4006	15000
2.5	900	0.92	893A4106	8000
2.4	949	1.76	894A4106	15000
2.3	978	0.84	893A4206	8000
2.2	1031	1.62	894A4206	15000
1.9	1183	1.41	894A4306	15000
1.7	1338	1.25	894A4406	15000
1.5	1479	1.13	894A4506	15000
1.3	1698	0.98	894A4606	15000
1.2	1921	0.87	894A4706	15000
1.1	2023	0.83	894A4806	15000

0.37 KW MOTOR

Nominal Output Rev/Min	Output Torque Nm	Service Factor	Unit Selection	Overhung Load N
168	20	6.78	890A0108	4171
124	27	5.66	890A0308	4556
109	31	5.22	890A0408	4732
97	35	4.83	890A0508	4906
76	45	4.07	890A0708	5263
70	48	3.86	890A0808	5372
56	61	3.26	890A1008	5640
49	69	2.97	890A1108	5650
43	79	2.71	890A1208	5655
39	88	2.50	890A1308	5658
35	97	2.30	890A1408	5801
32	107	2.09	890A1508	5821
31	110	3.94	891A1508	6000
28	119	3.68	891A1608	6000
27	125	1.79	890A1608	5849
24	143	3.08	891A1808	6000
23	150	1.49	890A1808	6000
20	171	2.57	891A1908	6000
19	175	1.28	890A1908	6000
17	194	1.16	890A2008	6000
17	193	2.28	891A2008	6000
15	225	1.82	891A2208	6000
13	255	1.64	891A2308	6000
13	263	3.13	893A1912	8000
12	289	1.52	891A2408	6000
12	294	2.24	892A2012	8000
12	290	2.85	893A2012	8000
10	313	1.41	891A3008	6000
10	353	2.34	893A2212	8000
9.5	345	1.28	891A3108	6000
9.4	360	1.83	892A2212	8000
8.6	393	2.10	893A2312	8000
8.4	401	1.64	892A2312	8000
8.2	394	1.12	891A3208	6000
7.7	439	1.35	893A2412	8000
7.5	448	1.35	892A2412	8000
7.0	466	0.95	891A3308	6000
3.0	1108	1.51	894A3908	15000
2.7	1222	1.37	894A4008	15000
2.4	1404	1.19	894A4108	15000
2.2	1526	1.09	894A4208	15000
2.0	1672	1.62	895A3912	15674
1.9	1751	0.95	894A4308	15000
1.8	1829	1.48	895A4012	15674
1.7	1980	0.84	894A4408	15000
1.7	1944	1.39	895A4112	15674
1.6	2039	1.85	896A4112	34000
1.4	2317	1.17	895A4212	15674
1.4	2370	1.59	896A4212	34000
1.3	2630	1.44	896A4312	34000
1.2	2743	0.99	895A4312	15674
1.2	2853	1.48	896A4412	34000
1.1	2927	0.93	895A4412	15674
1.0	3203	0.85	895A4512	15674
0.98	3400	1.24	896A4512	34000
0.90	3710	1.02	896A4612	34000
0.83	4025	1.05	896A4712	34000
0.77	4295	0.98	896A4812	34000

0.55 KW MOTOR

Nominal Output Rev/Min	Output Torque Nm	Service Factor	Unit Selection	Overhung Load N
171	29	4.63	890A0116	4078
126	40	3.86	890A0316	4432
111	45	3.56	890A0416	4590
98	51	3.29	890A0516	4745
77	66	2.78	890A0716	5057
71	71	2.64	890A0816	5150
56	90	2.23	890A1016	5381
51	98	3.85	891A1116	6000
50	102	2.03	890A1116	5398
45	112	3.51	891A1216	6000
43	116	1.85	890A1216	5407
40	127	3.28	891A1316	6000
39	129	1.71	890A1316	5412
36	140	2.97	891A1416	6000
35	143	1.57	890A1416	5658
32	157	1.43	890A1516	5692
31	161	2.69	891A1516	6000
29	175	2.51	891A1616	6000
27	184	1.22	890A1616	5740
24	209	2.10	891A1816	6000
23	220	1.02	890A1816	6000
23	216	3.83	893A1816	8000
20	256	0.88	890A1916	6000
20	251	1.75	891A1916	6000
20	253	3.26	893A1916	8000
19	258	2.55	892A1916	8000
18	283	1.56	891A2016	6000
18	278	2.97	893A2016	8000
16	282	2.33	892A2016	8000
15	330	1.24	891A2216	6000
15	345	1.91	892A2216	8000
15	341	2.42	893A2216	8000
13	374	1.12	891A2316	6000
13	386	1.71	892A2316	8000
13	377	2.19	893A2316	8000
13	401	3.99	894A2316	15000
12	424	1.04	891A2416	6000
12	432	1.41	892A2416	8000
12	423	1.41	893A2416	8000
12	406	1.62	892A3016	7496
12	401	2.06	893A3016	8000
12	420	3.98	894A3016	15000
11	460	0.96	891A3016	6000
11	442	3.12	894A2416	15000
11	467	3.57	894A3116	15000

Series K Gearboxes : Motorised selection

Nominal Output Rev/Min	Output Torque Nm	Service Factor	Unit Selection	Overhung Load N
10	505	0.87	891A3116	6000
10	492	1 .34	892A3116	7496
10	485	1.70	893A3116	8000
10	515	3.24	894A3216	15000
9.2	535	1.54	893A3216	8000
9.0	542	1.21	892A3216	7496
7.0	704	1.17	893A3316	8000
6.8	713	0.92	892A3316	7496
6.7	737	2.27	894A3316	15000
6.1	816	2.05	894A3416	15000
5.5	895	0.92	893A3416	8000
5.4	927	1.80	894A3516	15000
4.8	1017	0.81	893A3516	8000
4.7	1063	1.57	894A3616	15000
3.8	1305	1.28	894A3716	15000
3.4	1447	1.15	894A3816	15000
3.1	1605	1.69	895A3916	15674
3.0	1625	1.03	894A3916	15000
2.8	1791	0.93	894A4016	15000
2.8	1756	1.54	895A4016	15674
2.6	1867	1.45	895A4116	15674
2.5	1959	1.93	896A4116	34000
2.4	2058	0.81	894A4116	15000
2.2	2226	1.22	895A4216	15674
2.2	2278	1.66	896A4216	34000
2.0	2526	1.49	896A4316	34000
1.9	2637	1.03	895A4316	15674
1.8	2815	0.96	895A4416	15674
1.8	2742	1.54	896A4416	34000
1.6	3079	0.88	895A4516	15674
1.5	3269	1.29	896A4516	34000
1.4	3567	1.06	896A4616	34000
1.3	3871	1.09	896A4716	34000
1.2	4132	1.02	896A4816	34000
0.96	5121	0.82	896A4916	34000

0.75 KW MOTOR

Nominal Output Rev/Min	Output Torque Nm	Service Factor	Unit Selection	Overhung Load N
170	40	3.38	890A0118	3975
126	54	2.82	890A0318	4293
111	62	2.60	890A0418	4433
98	71	2.41	890A0518	4566
79	87	3.83	891A0718	6000
76	90	2.03	890A0718	4828
71	98	1.93	890A0818	4903
69	99	3.49	891A0818	6000
57	122	3.03	891A1018	6000
56	123	1.63	890A1018	5093
51	135	2.81	891A1118	5945
49	140	1.48	890A1118	5119
45	153	2.56	891A1218	5944
43	158	1.35	890A1218	5132
43	160	3.77	892A1218	7830
39	177	1.25	890A1318	5138
39	174	2.39	891A1318	5939
38	180	3.54	892A1318	8000
36	192	2.17	891A1418	6000
36	192	3.29	892A1418	8000
35	195	1.15	890A1418	5500
32	215	1.04	890A1518	5550
31	221	1.97	891A1518	6000
31	223	3.71	893A1518	8000
30	227	2.89	892A1518	8000
29	240	1.83	891A1618	6000
29	238	3.47	893A1618	8000
28	243	2.71	892A1618	8000
27	252	0.89	890A1618	5620
24	287	1.54	891A1818	6000
23	301	2.19	892A1818	8000
23	295	2.80	893A1818	8000
20	344	1.28	891A1918	6000
20	347	2.38	893A1918	8000
19	354	1.86	892A1918	7667
18	387	1.14	891A2018	6000

Nominal Output Rev/Min	Output Torque Nm	Service Factor	Unit Selection	Overhung Load N
18	380	2.17	893A2018	8000
16	386	1.70	892A2018	7637
15	452	0.91	891A2218	6000
15	473	1.39	892A2218	7760
15	467	1.77	893A2218	8000
14	476	3.36	894A2218	15000
13	512	0.82	891A2318	6000
13	528	1.25	892A2318	7541
13	516	1.60	893A2318	8000
12	591	1.03	892A2418	8000
12	579	1.03	893A2418	8000
12	555	1.19	892A3018	7496
12	549	1.51	893A3018	8000
12	548	2.91	894A2318	15000
12	574	2.91	894A3018	15000
11	606	2.28	894A2418	15000
11	640	2.61	894A3118	15000
10	673	0.98	892A3118	7496
10	665	1.24	893A3118	8000
10	705	2.37	894A3218	15000
9.2	732	1.13	893A3218	8000
9.0	742	0.89	892A3218	7496
6.9	964	0.86	893A3318	8000
6.7	1009	1.66	894A3318	15000
6.1	1117	1.49	894A3418	15000
5.4	1269	1.32	894A3518	15000
4.7	1455	1.15	894A3618	15000
3.8	1786	0.94	894A3718	15000
3.4	1980	0.84	894A3818	15000
3.1	2197	1.23	895A3918	15674
2.8	2403	1.13	895A4018	15674
2.6	2555	1.06	895A4118	15674
2.5	2681	1.41	896A4118	34000
2.2	3047	0.89	895A4218	15674
2.2	3118	1.21	896A4218	34000
1.9	3457	1.09	896A4318	34000
1.8	3752	1.12	896A4418	34000
1.8	3784	1.90	897A4023	43100
1.7	3907	3.10	898A4023	61368
1.6	4161	1.73	897A4123	43100
1.6	4296	2.81	898A4123	61368
1.5	4473	0.94	896A4518	34000
1.4	4779	1.50	897A4223	43100
1.4	4934	2.45	898A4223	61368
1.3	5303	1.36	897A4323	43100
1.2	5739	1.25	897A4423	43100
1.2	5559	2.18	898A4323	61368
1.1	5937	2.09	898A4423	61293
1.0	6627	1.08	897A4523	43100
0.97	6946	1.74	898A4523	61368
0.94	7172	1.00	897A4623	43100
0.91	7417	1.68	898A4623	61293
0.81	8357	1.49	898A4723	61293
0.79	8568	0.84	897A4723	43100
0.75	8979	1.35	898A4823	61368
0.61	11101	1.12	898A4923	61293
0.54	12510	0.99	898A5023	61293
0.51	13217	0.94	898A5123	61293

1.1 KW MOTOR

Nominal Output Rev/Min	Output Torque Nm	Service Factor	Unit Selection	Overhung Load N
169	59	2.30	890A0124	3795
125	80	1.92	890A0324	4051
125	81	3.62	891A0324	5740
113	89	3.41	891A0424	5890
110	92	1.77	890A0424	4157
100	101	3.14	891A0524	6000
97	104	1.64	890A0524	4253
79	128	2.67	891A0724	5867
76	133	1.38	890A0724	4427
71	144	1.31	890A0824	4472
69	146	2.44	891A0824	5881
56	181	1.11	890A1024	4590
56	179	2.11	891A1024	5850
51	199	1.96	891A1124	5846

Nominal Output Rev/Min	Output Torque Nm	Service Factor	Unit Selection	Overhung Load N
50	203	2.86	892A1124	7070
49	206	1.01	890A1124	4630
45	226	1.79	891A1224	5833
44	232	3.55	893A1224	7864
43	233	0.92	890A1224	4650
43	236	2.56	892A1224	7262
39	260	0.85	890A1324	4660
39	256	1.67	891A1324	6000
39	260	3.17	893A1324	7844
38	265	2.40	892A1324	7370
37	277	2.98	893A1424	7830
36	283	1.51	891A1424	6000
36	283	2.24	892A1424	7345
31	326	1.35	891A1524	6000
31	328	2.52	893A1524	7987
30	335	1.96	892A1524	7295
29	353	1.25	891A1624	6000
29	350	2.36	893A1624	7973
28	357	1.84	892A1624	7266
24	422	1.04	891A1824	6000
23	443	1.49	892A1824	7346
23	435	1.90	893A1824	8000
22	449	3.56	894A1824	15000
20	507	0.85	891A1924	6000
20	511	1.62	893A1924	8000
19	521	1.26	892A1924	7085
19	535	2.99	894A1924	15000
18	569	1.16	892A2024	7004
18	560	1.48	893A2024	8000
17	585	2.73	894A2024	15000
15	687	1.20	893A2224	8000
14	696	0.95	892A2224	7340
14	701	2.28	894A2224	14720
14	700	3.83	895A2224	21500
13	778	0.85	892A2324	6740
13	760	1.09	893A2324	8000
13	763	3.51	895A2324	21500
12	818	0.81	892A3024	7496
12	808	1.02	893A3024	8000
12	832	1.97	894A3024	15000
12	808	1.98	894A2324	15000
11	892	1.55	894A2424	15000
11	923	1.77	894A3124	15000
11	876	3.06	895A2424	21500
10	978	0.84	893A3124	8000
10	1019	1.61	894A3224	15000
6.7	1465	1.12	894A3324	15000
6.0	1611	1.02	894A3424	15000
5.3	1846	0.89	894A3524	15000
3.1	3234	0.84	895A3924	15674
2.7	3611	1.99	897A4024	43100
2.7	3733	3.24	898A4024	61368
2.5	3946	0.96	896A4124	34000
2.5	3972	1.81	897A4124	43100
2.4	4105	2.95	898A4124	61368
2.2	4589	0.82	896A4224	34000
2.2	4563	1.57	897A4224	43100
2.1	4715	2.56	898A4224	61368
2.0	5061	1.42	897A4324	43100
1.9	5311	2.28	898A4324	61368
1.8	5477	1.31	897A4424	43100
1.7	5672	2.19	898A4424	61368
1.6	6328	1.14	897A4524	43100
1.5	6638	1.82	898A4524	61368
1.4	6848	1.05	897A4624	43100
1.4	7090	1.75	898A4624	61368
1.3	7985	1.56	898A4724	61368
1.2	8187	0.88	897A4724	43100
1.2	8586	1.41	898A4824	61368
1.1	8860	0.81	897A4824	43100
0.93	10620	1.17	898A4924	61368
0.82	11964	1.04	898A5024	61368
0.78	12650	0.98	898A5124	61368
0.69	14252	0.87	898A5224	61368

Series K Gearboxes : Motorised selection

Bold print indicates a 6 pole motor is used
Triple reduction, see page
Quintuple reduction see page

1.5 KW MOTOR

Nominal Output Rev/Min	Output Torque Nm	Service Factor	Unit Selection	Overhung Load N
176	78	3.28	891A0128	5080
171	80	1.70	890A0128	3590
126	109	1.42	890A0328	3774
126	109	2.68	891A0328	5514
114	121	2.52	891A0428	5639
111	124	1.31	890A0428	3841
100	137	2.32	891A0528	5745
98	141	1.21	890A0528	3895
79	174	1.97	891A0728	5715
77	180	1.02	890A0728	3970
72	191	2.63	892A0437	6140
71	195	0.97	890A0828	3980
70	198	1.80	891A0828	5746
70	198	1.80	891A0828	5746
64	214	2.43	892A0537	6270
57	243	1.56	891A1028	5740
51	269	1.45	891A1128	5735
51	270	3.05	893A1128	7546
50	276	2.12	892A1128	6512
45	306	1.32	891A1228	5712
44	314	2.62	893A1228	7709
43	320	1.89	892A1228	6613
40	346	1.23	891A1328	6000
39	352	2.34	893A1328	7667
38	359	1.78	892A1328	6650
37	375	2.20	893A1428	7637
36	383	1.12	891A1428	6000
36	383	1.65	892A1428	6596
31	441	1.00	891A1528	6000
31	444	1.86	893A1528	7973
30	453	1.45	892A1528	6490
30	465	3.44	894A1528	15000
29	479	0.92	891A1628	6000
29	474	1.74	893A1628	7943
28	484	1.36	892A1628	6427
26	525	3.04	894A1628	15000
23	600	1.10	892A1828	6600
23	589	1.40	893A1828	8000
23	608	2.63	894A1828	14503
20	692	1.19	893A1928	8000
19	705	0.93	892A1928	6420
19	725	2.21	894A1928	14434
19	704	3.81	895A1928	21500
18	770	0.86	892A2028	6280
18	758	1.09	893A2028	8000
18	773	3.47	895A2028	21500
17	793	2.02	894A2028	14393
15	931	0.89	893A2228	8000
14	949	1.68	894A2228	14400
14	948	2.83	895A2228	20713
13	1029	0.80	893A2328	8000
13	1094	1.46	894A2328	15000
13	1033	2.59	895A2328	20672
13	1033	3.66	896A2328	34000
12	1145	1.46	894A3028	15000
12	1186	2.26	895A2428	20437
12	1157	3.26	896A2428	34000
11	1207	1.14	894A2428	15000
11	1275	1.31	894A3128	15000
11	1240	3.39	896A2528	34000
10	1405	1.19	894A3228	15000
10	1389	3.03	896A2628	34000
9.4	1456	1.10	894A2237	12564
9.4	1453	1.84	895A2237	20010
8.6	1586	1.69	895A2337	18640
8.6	1568	2.38	896A2337	34000
8.2	1682	0.95	894A2337	12812
7.7	1777	2.13	896A2437	34000
7.5	1821	1.47	895A2437	17978
7.2	1905	2.21	896A2537	34000
7.0	1930	1.40	895A3037	15674
6.7	2011	0.83	894A3328	15000
6.4	2111	1.28	895A3137	15674
6.4	2134	1.97	896A2637	34000
6.4	2144	3.35	897A2637	43400
5.7	2383	1.14	895A3237	15674
5.7	2355	1.60	896A3237	34000
4.5	2968	0.91	895A3337	15674
4.1	3311	1.14	896A3337	34000
3.6	3711	1.02	896A3437	34000
3.3	4116	0.92	896A3537	34000
2.9	4619	0.82	896A3637	34000
2.8	4889	1.47	897A4028	43100
2.7	5054	2.39	898A4028	61368
2.5	5378	1.34	897A4128	43100
2.4	5559	2.18	898A4128	61368
2.2	6179	1.16	897A4228	43100
2.1	6385	1.89	898A4228	61368
2.0	6853	1.05	897A4328	43100
1.9	7191	1.68	898A4328	61368
1.8	7416	0.97	897A4428	43100
1.7	7681	1.62	898A4428	61368
1.6	8568	0.84	897A4528	43100
1.6	8546	1.42	898A4137	61368
1.5	8989	1.35	898A4528	61368
1.4	9600	1.29	898A4628	61368
1.3	10812	1.15	898A4728	61368
1.2	11625	1.04	898A4828	61368
1.1	11810	1.05	898A4437	61293
0.98	13817	0.88	898A4537	61368
0.94	14380	0.86	898A4928	61368
0.91	14755	0.84	898A4637	61293

2.2 KW MOTOR

Nominal Output Rev/Min	Output Torque Nm	Service Factor	Unit Selection	Overhung Load N
176	114	2.23	891A0136	4800
176	115	3.42	892A0136	4800
171	118	1.16	890A0136	3230
126	160	0.97	890A0336	3290
126	161	1.83	891A0336	5120
125	162	2.77	892A0336	5126
114	177	1.72	891A0436	5200
114	178	3.74	893A0436	7760
111	183	0.89	890A0436	3290
111	181	2.56	892A0436	5223
101	200	3.47	893A0536	7970
100	201	1.58	891A0536	5300
99	204	2.38	892A0536	5310
98	207	0.82	890A0536	3270
80	254	2.94	893A0736	8000
79	255	1.34	891A0736	5450
78	259	2.00	892A0736	5460
70	291	1.23	891A0836	5510
70	288	2.69	893A0836	8000
69	293	1.83	892A0836	5512
59	344	2.37	893A1036	8000
58	350	1.61	892A1036	5541
57	357	1.06	891A1036	5550
54	376	3.95	894A1036	13300
51	395	0.99	891A1136	5540
51	395	2.09	893A1136	7123
50	403	1.45	892A1136	5535
49	414	3.69	894A1136	13500
45	449	0.90	891A1236	5500
44	459	1.80	893A1236	7437
43	468	1.30	892A1236	5477
43	475	3.32	894A1236	13900
39	525	1.22	892A1336	5390
39	515	1.60	893A1336	7357
37	549	1.51	893A1436	7299
37	538	2.97	894A1336	14300
36	560	1.13	892A1436	5286
34	593	2.69	894A1436	14600
31	663	0.99	892A1536	5081
31	649	1.27	893A1536	7948
30	679	2.35	894A1536	13982
29	708	0.93	892A1636	4959
29	693	1.19	893A1636	7890
28	729	3.67	895A1636	18855
26	768	2.08	894A1636	13900
24	861	0.96	893A1836	8000
23	888	1.80	894A1836	13634
23	883	3.03	895A1836	19587
20	1011	0.82	893A1936	8000
20	1029	2.60	895A1936	19997
19	1059	1.51	894A1936	13444
18	1129	2.37	895A2036	19929
18	1100	3.44	896A2036	34000
17	1159	1.38	894A2036	13331
17	1196	3.52	896A2136	34000
15	1385	1.93	895A2236	19337
15	1319	3.19	896A2236	34000
14	1388	1.15	894A2236	13840
13	1598	1.00	894A2336	15000
13	1511	1.77	895A2336	19224
13	1511	2.50	896A2336	34000
12	1680	0.99	894A3036	15000
12	1733	1.55	895A2436	18579
12	1692	2.23	896A2436	34000
11	1871	0.89	894A3136	15000
11	1830	1.48	895A3036	15674
11	1812	2.32	896A2536	34000
11	1900	3.78	897A2536	43405
10	2062	0.81	894A3236	15000
10	2000	1.36	895A3136	15674
10	2031	2.07	896A2636	34000
10	2039	3.52	897A2636	43405
8.9	2234	1.69	896A3236	34000
8.7	2256	1.20	895A3236	15674
8.5	2375	3.03	897A2345	43400
7.9	2549	2.82	897A2445	43400
7.0	2812	0.96	895A3336	15674
7.0	2854	2.52	897A2545	43400
6.6	3062	2.35	897A2645	43400
6.5	3082	3.99	898A2645	61700
6.3	3141	1.20	896A3336	34000
5.6	3520	1.07	896A3436	34000
5.1	3902	0.97	896A3536	34000
4.5	4380	0.86	896A3636	34000
2.8	7146	1.01	897A4036	43100
2.7	7387	1.64	898A4036	61368
2.5	7860	0.91	897A4136	43100
2.4	8124	1.49	898A4136	61368
2.1	9332	1.30	898A4236	61368
1.9	10510	1.15	898A4336	61368
1.7	11226	1.11	898A4436	61293
1.5	13137	0.92	898A4536	61368
1.4	14031	0.89	898A4636	61293

3.0 KW MOTOR

Nominal Output Rev/Min	Output Torque Nm	Service Factor	Unit Selection	Overhung Load N
179	153	3.64	893A0138	8000
176	157	2.51	892A0138	4480
127	217	2.95	893A0338	8000
125	220	2.03	892A0338	4676
114	243	2.75	893A0438	7333
111	247	1.88	892A0438	4718
111	247	2.87	894A0153	10700
101	273	2.55	893A0538	7490
99	278	1.74	892A0538	4743
80	347	2.16	893A0738	7483
78	353	1.47	892A0738	4740
70	394	1.97	893A0838	7452
69	400	1.34	892A0838	4693
65	425	2.87	894A0553	12100
59	469	1.74	893A1038	7384
58	477	1.18	892A1038	4571
54	513	2.90	894A1038	12530
51	539	1.53	893A1138	6640
50	550	1.06	892A1138	4420
50	555	2.63	894A0753	12700
49	565	2.70	894A1138	12663
44	627	1.32	893A1238	7127

Series K Gearboxes : Motorised selection

Nominal Output Rev/Min	Output Torque Nm	Service Factor	Unit Selection	Overhung Load N
44	632	2.40	894A0853	12900
43	638	0.95	892A1238	4180
43	648	2.44	894A1238	12938
39	716	0.89	892A1338	3950
39	703	1.18	893A1338	7003
39	711	3.77	895A1338	15200
37	749	1.10	893A1438	6913
37	734	2.18	894A1338	13207
36	764	0.83	892A1438	3790
35	779	3.44	895A1438	15200
34	809	1.98	894A1438	13387
31	885	0.93	893A1538	7920
31	881	3.04	895A1538	15200
30	926	1.73	894A1538	12819
29	945	0.87	893A1638	7830
28	968	1.65	894A1253	12753
28	995	2.69	895A1638	17609
26	1048	1.53	894A1638	12543
26	1063	2.52	895A1353	19200
24	1157	3.64	896A1838	34000
23	1211	1.32	894A1838	12641
23	1209	1.32	894A1453	12363
23	1204	2.22	895A1838	18084
21	1316	2.04	895A1553	20000
20	1403	1.91	895A1938	18280
20	1359	2.78	896A1938	34000
19	1445	1.11	894A1938	12313
19	1485	1.80	895A1653	18110
18	1540	1.74	895A2038	18134
18	1500	2.52	896A2038	34000
17	1580	1.01	894A2038	12117
17	1630	2.58	896A2138	34000
15	1889	1.42	895A2238	17765
15	1799	2.34	896A2238	34000
14	1893	0.85	894A2238	13200
14	1925	3.73	897A2238	43400
13	2060	1.30	895A2338	17568
13	2060	1.83	896A2338	34000
13	2151	3.34	897A2338	43400
12	2364	1.13	895A2438	16455
12	2307	1.64	896A2438	34000
12	2315	3.11	897A2438	43400
11	2495	1.09	895A3038	15674
11	2471	1.70	896A2538	34000
11	2591	2.77	897A2538	43400
10	2727	0.99	895A3138	15674
10	2769	1.52	896A2638	34000
10	2781	2.58	897A2638	43400
8.9	3046	1.24	896A3238	34000
8.7	3076	0.88	895A3238	15674
8.5	3221	2.23	897A2353	43400
7.9	3458	2.08	897A2453	43400
7.1	3871	1.86	897A2553	43324
7.0	3929	3.13	898A2553	61700
6.6	4153	1.73	897A2653	43250
6.5	4181	2.94	898A2653	61700
6.3	4283	0.88	896A3338	34000
5.7	4731	1.52	897A3253	43100
5.5	4886	2.48	898A3253	61368
4.1	6553	1.10	897A3353	43100
4.0	6768	1.79	898A3453	61368
3.7	7360	0.98	897A3453	43100
3.6	7623	1.59	898A3353	61368
3.3	8093	0.89	897A3553	43100
3.2	8562	1.41	898A3553	61368
3.0	8977	0.80	897A3653	43100
2.9	9414	1.28	898A3653	61368
2.7	10073	1.20	898A4038	61368
2.5	10913	1.11	898A3753	61368
2.4	11079	1.09	898A4138	61368
2.2	12404	0.97	898A3853	61368
2.1	12725	0.95	898A4238	61368
1.9	14333	0.84	898A4338	61368
1.8	15308	0.81	898A4438	61368

4.0 KW MOTOR

Nominal Output Rev/Min	Output Torque Nm	Service Factor	Unit Selection	Overhung Load N
180	203	2.75	893A0146	8000
177	207	1.90	892A0146	4080
167	218	3.24	894A0146	9380
128	287	2.23	893A0346	8000
126	292	1.53	892A0346	4113
121	303	3.24	894A0346	10100
114	322	2.07	893A0446	6800
112	328	1.42	892A0446	4086
107	342	3.24	894A0446	10300
101	362	1.92	893A0546	6890
100	368	1.32	892A0546	4034
98	376	3.24	894A0546	10500
81	456	2.16	894A0355	10868
80	459	1.63	893A0746	6838
79	468	1.11	892A0746	3840
75	491	2.75	894A0746	11000
72	513	2.16	894A0455	11080
70	521	1.49	893A0846	6767
69	530	1.01	892A0846	3670
66	560	2.50	894A0846	11200
59	621	1.31	893A1046	6614
58	632	0.89	892A1046	3360
57	648	3.76	895A1046	14500
54	680	2.19	894A1046	11569
51	714	1.16	893A1146	6036
50	730	3.46	895A1146	14900
49	748	2.04	894A1146	11617
44	830	0.99	893A1246	6740
43	858	1.84	894A1246	11737
43	850	3.12	895A1246	15200
40	931	0.89	893A1346	6560
39	941	2.85	895A1346	14811
37	991	0.83	893A1446	6430
37	972	1.65	894A1346	11841
35	1031	2.60	895A1446	14811
34	1072	1.49	894A1446	11872
32	1148	3.29	896A1546	34000
31	1167	2.30	895A1546	14811
30	1227	1.30	894A1546	11365
29	1273	2.97	896A1646	34000
28	1317	2.00	895A1646	16051
27	1383	3.04	896A1746	34000
26	1387	1.15	894A1646	11073
24	1532	2.75	896A1846	34000
23	1604	1.00	894A1846	11400
23	1595	1.68	895A1846	16205
20	1857	1.44	895A1946	16134
20	1799	2.10	896A1946	34000
20	1839	3.91	897A1946	43400
19	1913	0.84	894A1946	10900
18	2039	1.30	895A2046	15890
18	1986	1.90	896A2046	34000
17	2159	1.95	896A2146	34000
17	2121	3.39	897A2046	43400
16	2218	3.24	897A2146	43400
15	2501	1.07	895A2246	15800
15	2383	1.77	896A2246	34000
14	2549	2.82	897A2246	43388
13	2728	0.98	895A2346	15500
13	2728	1.39	896A2346	34000
13	2849	2.52	897A2346	43388
12	3130	0.86	895A2446	13800
12	3055	1.24	896A2446	34000
12	3065	2.35	897A2446	43388
12	3095	3.91	898A2446	61700
11	3304	0.82	895A3046	15674
11	3272	1.29	896A2546	34000
11	3431	2.10	897A2546	43301
11	3476	3.54	898A2546	61700
10	3667	1.15	896A2646	34000
10	3683	1.95	897A2646	43301
10	3710	3.32	898A2646	61700
9.0	4033	0.94	896A3246	34000
8.6	4182	1.72	897A3246	43100
8.3	4325	2.80	898A3246	61368
6.2	5793	1.24	897A3346	43100
6.0	5992	2.00	898A3446	61368
5.5	6507	1.10	897A3446	43100
5.3	6746	1.79	898A3346	61368
5.0	7156	1.00	897A3546	43100
4.8	7578	1.60	898A3546	61368
4.5	7933	0.91	897A3646	43100
4.3	8333	1.45	898A3646	61368
3.7	9664	1.25	898A3746	61368
3.3	10986	1.10	898A3846	61368
2.9	12372	0.98	898A3946	61368
2.7	13338	0.91	898A4046	61368
2.5	14669	0.82	898A4146	61368

5.5 KW MOTOR

Nominal Output Rev/Min	Output Torque Nm	Service Factor	Unit Selection	Overhung Load N
180	280	1.99	893A0154	8000
177	286	1.37	892A0154	3480
167	299	2.37	894A0154	8915
128	396	1.62	893A0354	8000
125	403	1.11	892A0354	3270
121	416	2.37	894A0354	9444
114	445	1.50	893A0454	6000
112	452	1.03	892A0454	3140
107	469	2.37	894A0454	9575
101	499	1.39	893A0554	5990
100	508	0.95	892A0554	2970
98	515	2.37	894A0554	9705
81	627	1.57	894A0357	9920
80	633	1.18	893A0754	5870
78	646	3.56	895A0754	12711
77	646	0.80	892A0754	2490
75	673	2.00	894A0754	9965
72	705	1.57	894A0457	10000
70	719	1.08	893A0854	5740
70	723	3.25	895A0854	12911
66	775	1.57	894A0557	10000
66	767	1.82	894A0854	10027
59	858	0.95	893A1054	5460
57	889	2.74	895A1054	14131
54	932	1.60	894A1054	10127
51	986	0.84	893A1154	5130
50	1000	2.53	895A1154	14477
49	1025	1.49	894A1154	10049
43	1176	1.34	894A1254	9935
43	1164	2.28	895A1254	14722
39	1290	2.08	895A1354	14227
37	1332	1.20	894A1354	9792
35	1413	1.90	895A1454	14227
34	1469	1.09	894A1454	9600
32	1574	2.40	896A1554	34000
31	1599	1.68	895A1554	14227
30	1681	0.95	894A1554	9185
29	1744	2.17	896A1654	34000
28	1805	1.48	895A1654	13715
27	1895	2.22	896A1754	34000
26	1901	0.84	894A1654	8717
26	1914	3.76	897A1754	43400
24	2100	2.00	896A1854	34000
24	2129	3.38	897A1854	43400
23	2185	1.23	895A1854	13387
20	2545	1.05	895A1954	12914
20	2465	1.53	896A1954	34000
20	2520	2.85	897A1954	43400
18	2795	0.96	895A2054	12524
18	2722	1.39	896A2054	34000
18	2865	2.51	897A1757	43400
17	2958	1.42	896A2154	34000
17	2906	2.47	897A2054	43400
16	3039	2.37	897A2154	43400
16	3124	3.94	898A2154	61700
15	3265	1.29	896A2254	34000
14	3492	2.06	897A2254	43372
14	3475	3.54	898A2254	61700
13	3738	1.01	896A2354	34000
13	3903	1.84	897A2354	43372
13	3965	3.05	898A2354	61700
12	4186	0.90	896A2454	34000

Series K Gearboxes : Motorised selection

Bold print indicates a 6 pole motor is used
Triple reduction, see page
Quadruple reduction see page

Nominal Output Rev/Min	Output Torque Nm	Service Factor	Unit Selection	Overhung Load N
12	4200	1.71	897A2454	43372
12	4241	2.85	898A2454	61700
11	4483	0.94	896A2554	34000
11	4701	1.53	897A2554	43215
11	4763	2.58	898A2554	61700
10	5046	1.42	897A2654	43215
10	5083	2.42	898A2654	61700
8.6	5770	1.25	897A3254	43100
8.3	5927	2.04	898A3254	61368
8.0	6307	1.14	897A2457	43400
7.0	7061	1.02	897A2557	43088
7.0	7166	1.72	898A2557	61658
6.2	7993	0.90	897A3354	43100
6.0	8210	1.47	898A3454	61368
5.5	8979	0.80	897A3454	43100
5.3	9244	1.31	898A3354	61368
4.8	10384	1.16	898A3554	61368
4.3	11418	1.06	898A3654	61368
3.7	13242	0.91	898A3754	61368
3.3	15054	0.80	898A3854	61368

7.5 KW MOTOR

Nominal Output Rev/Min	Output Torque Nm	Service Factor	Unit Selection	Overhung Load N
178	386	3.49	895A0156	10798
168	407	1.74	894A0156	8295
125	549	3.49	895A0356	11458
121	565	1.74	894A0356	8570
118	581	2.32	895A0165	11650
113	611	3.32	895A0456	11738
108	637	1.74	894A0456	8610
101	676	3.15	895A0556	11938
98	700	1.74	894A0556	8645
83	827	2.32	895A0365	12500
78	878	2.62	895A0756	12477
75	915	1.47	894A0756	8595
75	918	2.32	895A0465	12700
70	982	2.39	895A0856	12677
68	1043	1.34	894A0856	8465
67	1026	2.28	895A0565	12950
64	1071	3.76	896A0665	34000
57	1208	2.02	895A1056	13640
54	1267	1.18	894A1056	8204
54	1285	2.89	896A0765	34000
52	1325	1.89	895A0765	13300
50	1394	1.10	894A1156	7957
50	1360	1.86	895A1156	13913
48	1435	2.63	896A0865	34000
46	1488	1.75	895A0865	13450
44	1547	2.72	896A0965	34000
43	1598	0.99	894A1256	7532
43	1582	1.67	895A1256	14086
40	1725	2.44	896A1065	34000
39	1753	1.53	895A1356	13450
38	1810	0.88	894A1356	7060
35	1920	1.40	895A1456	13450
35	1996	1.89	896A1165	34000
34	1996	0.80	894A1456	6570
32	2138	1.77	896A1556	34000
32	2164	3.32	897A1556	35600
31	2173	1.23	895A1556	13450
30	2268	1.67	896A1265	34000
29	2370	1.59	896A1656	34000
29	2392	1.76	896A1365	34000
29	2404	2.99	897A1656	35600
28	2453	1.09	895A1656	10600
27	2575	1.63	896A1756	34000
26	2601	2.76	897A1756	43400
25	2721	1.55	896A1465	34000
24	2854	1.47	896A1856	34000
24	2893	2.48	897A1856	43400
23	2970	0.90	895A1856	9630
21	3221	1.17	896A1565	34000
20	3350	1.13	896A1956	34000
20	3424	2.10	897A1956	43400
19	3579	1.06	896A1665	34000
19	3543	3.41	898A1956	61700
18	3699	1.02	896A2056	34000
18	3869	1.09	896A1765	34000
17	4020	1.05	896A2156	34000
17	3949	1.82	897A2056	43400
17	3942	3.07	898A2056	61700
16	4295	0.98	896A1865	34000
16	4130	1.74	897A2156	43400
16	4246	2.90	898A2156	61700
15	4437	0.95	896A2256	34000
14	4746	1.51	897A2256	43350
14	4722	2.60	898A2256	61700
13	5305	1.36	897A2356	43350
13	5388	2.25	898A2356	61700
12	5707	1.26	897A2456	43350
12	5763	2.10	898A2456	61700
11	6388	1.13	897A2556	43100
11	6473	1.90	898A2556	61700
10	6858	1.05	897A2656	43100
10	6908	1.78	898A2656	61700
8.7	7787	0.92	897A3256	43100
8.4	8054	1.50	898A3256	61368
8.0	8642	1.40	898A2465	61670
7.0	9772	1.26	898A2565	61625
6.5	10400	1.18	898A2665	61700
6.1	11157	1.08	898A3456	61368
5.4	12563	0.96	898A3356	61368
4.8	14112	0.86	898A3556	61368

11.0 KW MOTOR

Nominal Output Rev/Min	Output Torque Nm	Service Factor	Unit Selection	Overhung Load N
178	564	2.39	895A0166	10612
168	599	1.18	894A0166	7210
131	768	3.89	896A0366	34000
125	803	2.39	895A0366	11197
121	832	1.18	894A0366	7040
120	842	3.45	896A0167	34000
119	849	1.59	895A0167	11000
117	860	3.64	896A0466	34000
113	893	2.27	895A0466	11440
109	938	1.18	894A0466	6920
109	925	3.89	896A0566	34000
101	988	2.15	895A0566	11640
100	1013	3.45	896A0267	34000
98	1031	1.18	894A0566	6790
97	1036	3.64	896A0666	34000
87	1158	2.80	896A0367	34000
84	1207	1.59	895A0367	11600
81	1250	2.78	896A0766	34000
78	1284	1.79	895A0766	12068
78	1299	2.58	896A0467	34000
75	1347	1.00	894A0766	6170
75	1339	1.59	895A0467	11700
72	1393	2.55	896A0866	34000
72	1394	2.80	896A0567	34000
70	1436	1.64	895A0866	12268
68	1535	0.91	894A0866	5730
68	1497	1.56	895A0567	11800
67	1501	2.76	896A0966	34000
65	1563	2.58	896A0667	34000
60	1677	2.51	896A1066	34000
57	1765	1.38	895A1066	12781
54	1875	1.98	896A0767	34000
52	1934	1.30	895A0767	11800
52	1928	1.95	896A1166	34000
50	1987	1.27	895A1166	12927
48	2094	1.80	896A0867	34000
47	2171	1.20	895A0867	11800
46	2211	1.71	896A1266	34000
45	2258	1.86	896A0967	34000
44	2312	3.11	897A1266	35604
43	2313	1.15	895A1266	12972
43	2327	1.81	896A1366	34000
43	2341	3.07	897A0967	35600
41	2456	2.93	897A1366	35604
40	2517	1.67	896A1067	34000
40	2529	2.84	897A1067	35600
39	2563	1.05	895A1366	12088
38	2666	1.01	895A1067	11500
38	2646	1.59	896A1466	34000
36	2775	2.59	897A1466	35604
35	2807	0.95	895A1466	12088
35	2912	1.30	896A1167	34000
34	2995	0.89	895A1167	11200
33	3073	2.34	897A1167	35600
32	3126	1.21	896A1566	34000
32	3163	2.27	897A1566	35584
31	3176	0.84	895A1566	12088
31	3262	3.71	898A1566	61800
30	3309	1.14	896A1267	34000
29	3465	1.09	896A1666	34000
29	3490	1.21	896A1367	34000
29	3515	2.05	897A1666	35575
29	3481	2.07	897A1267	35553
28	3693	1.95	897A1367	35553
28	3657	3.36	898A1367	61700
27	3765	1.12	896A1766	34000
27	3802	1.89	897A1766	43400
27	3676	3.29	898A1666	61800
26	3910	3.15	898A1766	61832
25	3971	1.06	896A1467	34000
25	4141	2.97	898A1467	61700
24	4172	1.01	896A1866	34000
24	4229	1.70	897A1866	43400
24	4185	1.72	897A1467	35553
23	4407	2.79	898A1866	61832
21	4700	0.80	896A1567	34000
21	4768	1.51	897A1567	43400
21	4904	2.47	898A1567	61700
20	5005	1.44	897A1966	43400
19	5280	1.36	897A1667	43400
19	5178	2.34	898A1966	61186
18	5772	1.25	897A2066	43400
18	5701	1.26	897A1767	43400
18	5517	2.19	898A1667	61672
17	6037	1.19	897A2166	43400
17	5877	2.09	898A1767	61664
17	5761	2.10	898A2066	61186
16	6345	1.13	897A1867	43361
16	6206	1.98	898A2166	61700
15	6937	1.04	897A2266	43311
15	6630	1.86	898A1867	61664
14	6903	1.78	898A2266	61700
13	7753	0.93	897A2366	43311
13	7565	0.95	897A1967	43351
13	7875	1.54	898A2366	61700
13	7788	1.55	898A1967	61700
12	8665	0.83	897A2067	43266
12	8342	0.86	897A2466	43311
12	8654	1.40	898A2067	61700
12	8424	1.44	898A2466	61700
11	9461	1.30	898A2566	61700
11	9347	1.32	898A2167	61700
10	10353	1.19	898A2267	61700
10	10097	1.22	898A2666	61700
8.5	11822	1.02	898A2367	61651
8.0	12610	0.96	898A2467	61648
7.0	14258	0.86	898A2567	61566
6.5	15174	0.81	898A2667	61700

Series K Gearboxes : Motorised selection

15.0 KW MOTOR

Nominal Output Rev/Min	Output Torque Nm	Service Factor	Unit Selection	Overhung Load N
181	757	3.39	896A0168	34000
179	767	1.76	895A0168	10400
150	914	3.39	896A0268	34000
132	1044	2.86	896A0368	34000
126	1091	1.76	895A0368	10900
121	1142	2.55	896A0174	34000
117	1169	2.68	896A0468	34000
114	1213	1.67	895A0468	11100
109	1257	2.86	896A0568	34000
102	1343	1.59	895A0568	11300
100	1374	2.55	896A0274	34000
97	1408	2.68	896A0668	34000
88	1571	2.06	896A0374	34000
81	1700	2.05	896A0768	34000
79	1745	1.32	895A0768	11600
78	1763	1.90	896A0474	34000
73	1893	1.88	896A0868	34000
73	1892	2.06	896A0574	34000
73	1901	3.77	897A0868	35600
70	1951	1.20	895A0868	11800
70	1974	3.49	897A0574	35600
67	2040	2.03	896A0968	34000
65	2121	1.90	896A0674	34000
65	2115	3.40	897A0968	35600
64	2147	3.35	897A0674	35600
60	2280	1.85	896A1068	34000
60	2281	3.15	897A1068	35600
57	2399	1.02	895A1068	11800
54	2544	1.46	896A0774	34000
52	2621	1.44	896A1168	34000
52	2648	2.71	897A0774	35600
51	2701	0.94	895A1168	11800
50	2777	2.59	897A1168	35600
48	2840	1.33	896A0874	34000
48	2853	2.52	897A0874	35600
46	3005	1.26	896A1268	34000
45	3063	1.37	896A0974	34000
44	3143	0.84	895A1268	11700
44	3142	2.29	897A1268	35588
44	3118	3.88	898A1268	61700
43	3162	1.33	896A1368	34000
43	3176	2.26	897A0974	35536
42	3301	3.73	898A1368	61469
41	3337	2.15	897A1368	35588
40	3415	1.23	896A1074	34000
40	3432	2.09	897A1074	35536
38	3596	1.17	896A1468	34000
37	3771	1.91	897A1468	35583
37	3744	3.28	898A1468	61469
35	3951	0.96	896A1174	34000
33	4169	1.72	897A1174	35536
33	4129	2.93	898A1174	61700
32	4248	0.89	896A1568	34000
32	4299	1.67	897A1568	35566
31	4489	0.84	896A1274	34000
31	4433	2.73	898A1568	61400
30	4677	2.59	898A1274	61700
29	4708	0.80	896A1668	34000
29	4734	0.89	896A1374	34000
29	4776	1.51	897A1668	35548
29	4722	1.52	897A1274	35500
28	5011	1.43	897A1374	35500
28	4996	2.42	898A1668	61400
28	4961	2.48	898A1374	61672
27	5116	0.82	896A1768	34000
27	5167	1.39	897A1768	43400
26	5314	2.31	898A1768	61304
25	5618	2.19	898A1474	61672
24	5747	1.25	897A1868	43400
24	5677	1.27	897A1474	35500
23	5989	2.05	898A1868	61304
21	6468	1.11	897A1574	43400
21	6652	1.82	898A1574	61664
20	6802	1.06	897A1968	43400
19	7163	1.00	897A1674	43400
19	7037	1.72	898A1968	60600
18	7845	0.92	897A2068	43400
18	7734	0.93	897A1774	43400
18	7830	1.55	898A2068	60600
18	7484	1.62	898A1674	61640
17	8204	0.88	897A2168	43400
17	7973	1.54	898A1774	61623
16	8607	0.84	897A1874	43338
16	8434	1.46	898A2168	61700
15	9380	1.31	898A2268	61700
15	8994	1.37	898A1874	61623
13	10702	1.13	898A2368	61700
13	10566	1.15	898A1974	61700
12	11740	1.03	898A2074	61700
12	11447	1.06	898A2468	61700
11	12857	0.96	898A2568	61700
11	12680	0.97	898A2174	61700
10	14045	0.88	898A2274	61700
10	13721	0.90	898A2668	61700

18.5 KW MOTOR

Nominal Output Rev/Min	Output Torque Nm	Service Factor	Unit Selection	Overhung Load N
184	925	2.78	896A0176	34000
152	1115	2.78	896A0276	34000
133	1274	2.35	896A0376	34000
121	1402	2.08	896A0175	34000
119	1427	2.19	896A0476	34000
118	1441	2.84	897A0175	35600
115	1484	3.41	898A0175	61700
110	1534	2.35	896A0576	34000
101	1686	2.08	896A0275	34000
98	1719	2.19	896A0676	34000
98	1730	2.84	897A0275	35600
95	1783	3.41	898A0275	61700
88	1928	1.68	896A0375	34000
84	2014	2.84	897A0375	35600
83	2059	3.41	898A0375	61700
82	2075	1.68	896A0776	34000
79	2163	1.55	896A0475	34000
79	2151	3.27	897A0776	35600
78	2194	2.84	897A0475	35600
75	2264	3.41	898A0475	61700
73	2311	1.54	896A0876	34000
73	2321	1.68	896A0575	34000
73	2320	3.09	897A0876	35588
70	2422	2.84	897A0575	35530
69	2475	3.41	898A0575	61700
68	2491	1.67	896A0976	34000
66	2582	2.78	897A0976	35588
65	2603	1.55	896A0675	34000
65	2635	2.73	897A0675	35530
62	2722	3.41	898A0675	61700
61	2783	1.51	896A1076	34000
61	2785	2.58	897A1076	35588
54	3122	1.19	896A0775	34000
54	3167	3.41	898A0775	61700
53	3199	1.18	896A1176	34000
53	3249	2.21	897A0775	35530
50	3390	2.12	897A1176	35588
49	3485	1.08	896A0875	34000
49	3501	2.05	897A0875	35530
48	3519	3.41	898A0875	61700
46	3669	1.03	896A1276	34000
45	3759	1.12	896A0975	34000
45	3806	3.18	898A1276	61507
44	3860	1.09	896A1376	34000
44	3897	1.84	897A0975	35481
44	3836	1.87	897A1276	35574
44	3823	3.22	898A0975	61700
42	4074	1.76	897A1376	35574
42	4029	3.05	898A1376	61201
40	4190	1.00	896A1075	34000
40	4211	1.71	897A1075	35481
40	4235	2.90	898A1075	61700
39	4390	0.96	896A1476	34000
37	4603	1.56	897A1476	35563
37	4571	2.69	898A1476	61201
34	5066	2.39	898A1175	61673
33	5115	1.41	897A1175	35481
32	5248	1.37	897A1576	35551
31	5411	2.24	898A1576	61050
30	5739	2.11	898A1275	61673
29	5831	1.23	897A1676	35524
29	5795	1.24	897A1275	35453
28	6148	1.17	897A1375	35453
28	6099	1.98	898A1676	61050
28	6088	2.02	898A1375	61648
27	6307	1.14	897A1776	43400
26	6487	1.90	898A1776	60842
25	6893	1.78	898A1475	61648
24	7016	1.02	897A1876	43400
24	6966	1.03	897A1475	35453
23	7311	1.68	898A1876	60842
21	7937	0.91	897A1575	43400
21	8163	1.48	898A1575	61633
20	8304	0.87	897A1976	43400
20	8591	1.41	898A1976	60086
19	8789	0.82	897A1675	43400
18	9558	1.27	898A2076	60086
18	9183	1.32	898A1675	61612
17	9783	1.26	898A1775	61588
16	10296	1.19	898A2176	61700
15	11451	1.07	898A2276	61700
15	11036	1.11	898A1875	61588
13	13065	0.93	898A2376	61700
13	12965	0.93	898A1975	61700
12	14405	0.84	898A2075	61700
12	13974	0.87	898A2476	61700

22.0 KW MOTOR

Nominal Output Rev/Min	Output Torque Nm	Service Factor	Unit Selection	Overhung Load N
184	1100	2.34	896A0178	34000
179	1134	3.60	897A0178	35600
152	1326	2.34	896A0278	34000
148	1365	3.60	897A0278	35600
133	1516	1.97	896A0378	34000
127	1590	3.60	897A0378	35600
121	1667	1.75	896A0184	34000
119	1698	1.84	896A0478	34000
118	1714	2.39	897A0184	35508
117	1727	3.60	897A0478	35600
115	1765	2.87	898A0184	61700
110	1825	1.97	896A0578	34000
106	1909	3.60	897A0578	35600
101	2005	1.75	896A0284	34000
98	2045	1.84	896A0678	34000
98	2057	2.39	897A0284	35508
97	2077	3.46	897A0678	35586
95	2120	2.87	898A0284	61700
88	2293	1.41	896A0384	34000
84	2396	2.39	897A0384	35508
83	2448	2.87	898A0384	61700
82	2467	1.41	896A0778	34000
79	2573	1.30	896A0484	34000
79	2559	2.75	897A0778	35586
78	2609	2.39	897A0484	35508
75	2692	2.87	898A0484	61700
73	2749	1.29	896A0878	34000
73	2760	1.41	896A0584	34000
73	2759	2.59	897A0878	35576
70	2881	2.39	897A0584	35460
69	2944	2.87	898A0584	61700
68	2962	1.40	896A0978	34000
66	3071	2.34	897A0978	35576
65	3095	1.30	896A0684	34000
62	3237	2.87	898A0684	61690
61	3310	1.27	896A1078	34000
61	3312	2.17	897A1078	35576
61	3340	3.68	898A1078	61700
54	3713	1.00	896A0784	34000

Series K Gearboxes : Motorised selection

Bold print indicates a 6 pole motor is used
Triple reduction, see page
Quadruple reduction see page

Nominal Output Rev/Min	Output Torque Nm	Service Factor	Unit Selection	Overhung Load N
54	3767	2.87	898A0784	61680
53	3805	0.99	896A1178	34000
53	3864	2.29	897A0784	35460
51	3996	3.03	898A1178	61700
50	4031	1.78	897A1178	35576
49	4145	0.91	896A0884	34000
49	4164	1.73	897A0884	35460
48	4185	2.87	898A0884	61671
46	4363	0.87	896A1278	34000
45	4470	0.94	896A0984	34000
45	4527	2.67	898A1278	61315
44	4590	0.92	896A1378	34000
44	4635	1.55	897A0984	35426
44	4562	1.58	897A1278	35560
44	4546	2.71	898A0984	61671
42	4845	1.48	897A1378	35560
42	4792	2.57	898A1378	60932
40	4983	0.84	896A1084	34000
40	5007	1.55	897A1084	35426
40	5036	2.44	898A1084	61671
37	5473	1.31	897A1478	35535
37	5436	2.26	898A1478	60932
34	6025	2.01	898A1184	61647
33	6083	1.18	897A1184	35426
32	6241	1.15	897A1578	35535
31	6435	1.88	898A1578	60700
30	6825	1.77	898A1284	61647
29	6934	1.04	897A1678	35500
29	6891	1.04	897A1284	35406
28	7312	0.98	897A1384	35406
28	7253	1.67	898A1678	60700
28	7240	1.70	898A1384	61625
27	7501	0.96	897A1778	43400
26	7714	1.59	898A1778	60380
25	8198	1.50	898A1484	61625
24	8343	0.86	897A1878	43400
23	8694	1.41	898A1878	60380
21	9707	1.25	898A1584	61602
20	10217	1.18	898A1978	59573
18	11367	1.06	898A2078	59573
18	10921	1.11	898A1684	61584
17	11634	1.06	898A1784	61552
16	12243	1.00	898A2178	61700
15	13618	0.90	898A2278	61700

30.0 KW MOTOR

Nominal Output Rev/Min	Output Torque Nm	Service Factor	Unit Selection	Overhung Load N
184	1500	1.71	896A0188	34000
179	1547	2.64	897A0188	35556
173	1596	3.17	898A0188	61700
152	1809	1.71	896A0288	34000
148	1861	2.64	897A0288	35556
144	1918	3.17	898A0288	61700
133	2067	1.45	896A0388	34000
127	2168	2.64	897A0388	35556
125	2214	3.17	898A0388	61700
122	2262	1.29	896A0191	34000
119	2315	1.35	896A0488	34000
119	2326	1.76	897A0191	35300
117	2355	2.62	897A0488	35556
115	2394	2.11	898A0191	61700
114	2435	3.17	898A0488	61700
110	2489	1.45	896A0588	34000
106	2603	2.64	897A0588	35556
104	2662	3.17	898A0588	61700
101	2721	1.29	896A0291	34000
99	2791	1.76	897A0291	35300
98	2789	1.35	896A0688	34000
97	2833	2.54	897A0688	35556
96	2877	2.11	898A0291	61700
94	2927	3.17	898A0688	61700
89	3111	1.04	896A0391	34000
85	3250	1.76	897A0391	35300
83	3322	2.11	898A0391	61700
82	3365	1.03	896A0788	34000
81	3407	3.17	898A0788	61700
79	3491	0.96	896A0491	34000
79	3489	2.02	897A0788	35556
78	3540	1.76	897A0491	35300
76	3653	2.11	898A0491	61700
74	3745	1.04	896A0591	34000
73	3749	0.95	896A0888	34000
73	3763	1.90	897A0888	35550
73	3787	3.12	898A0888	61700
71	3908	1.76	897A0591	35300
69	3994	2.11	898A0591	61700
68	4039	1.03	896A0988	34000
67	4112	2.99	898A0988	61700
66	4199	0.96	896A0691	34000
66	4188	1.72	897A0988	35550
65	4251	1.69	897A0691	35300
63	4391	2.11	898A0691	61668
61	4513	0.93	896A1088	34000
61	4517	1.59	897A1088	35550
61	4555	2.70	898A1088	61311
54	5110	2.11	898A0791	61636
53	5243	1.37	897A0791	35300
51	5449	2.22	898A1188	61311
50	5497	1.31	897A1188	35550
49	5649	1.27	897A0891	35300
49	5678	2.11	898A0891	61605
45	6173	1.96	898A1288	60875
45	6168	1.99	898A0991	61605
44	6288	1.14	897A0991	35300
44	6221	1.16	897A1288	35528
42	6607	1.09	897A1388	35528
42	6534	1.88	898A1388	60318
41	6794	1.06	897A1091	35300
40	6833	1.80	898A1091	61605
37	7465	0.96	897A1488	35500
37	7413	1.66	898A1488	60318
34	8253	0.87	897A1191	35300
34	8174	1.48	898A1191	61587
32	8510	0.84	897A1588	35500
32	8776	1.38	898A1588	59900
30	9260	1.31	898A1291	61587
28	9891	1.22	898A1688	59900
28	9822	1.25	898A1391	61570
26	10519	1.17	898A1788	59324
25	11122	1.11	898A1491	61570
23	11856	1.04	898A1888	59324
21	13170	0.92	898A1591	61532
20	13932	0.87	898A1988	58400
19	14816	0.82	898A1691	61520

37.0 KW MOTOR

Nominal Output Rev/Min	Output Torque Nm	Service Factor	Unit Selection	Overhung Load N
184	1843	1.39	896A0194	34000
179	1902	2.15	897A0194	35534
173	1962	2.58	898A0194	61245
152	2223	1.39	896A0294	34000
148	2288	2.15	897A0294	35534
144	2357	2.58	898A0294	61326
133	2541	1.18	896A0394	34000
127	2665	2.15	897A0394	35534
125	2722	2.58	898A0394	61175
119	2846	1.10	896A0494	34000
117	2895	2.13	897A0494	35534
115	2953	1.71	898A0192	61700
114	2993	2.58	898A0494	61186
110	3059	1.18	896A0594	34000
106	3200	2.15	897A0594	35534
104	3272	2.58	898A0594	61350
98	3428	1.10	896A0694	34000
97	3482	2.06	897A0694	35530
96	3548	1.71	898A0292	61700
94	3598	2.58	898A0694	61373
83	4097	1.71	898A0392	61700
82	4136	0.84	896A0794	34000
81	4187	2.58	898A0794	61198
79	4289	1.64	897A0794	35530
76	4505	1.71	898A0492	61700
73	4625	1.55	897A0894	35526
73	4655	2.53	898A0894	61151
69	4926	1.71	898A0592	61700
68	4965	0.84	896A0994	34000
67	5055	2.43	898A0994	61315
66	5148	1.40	897A0994	35526
63	5416	1.71	898A0692	61649
61	5552	1.29	897A1094	35526
61	5599	2.20	898A1094	60972
54	6303	1.71	898A0792	61598
51	6698	1.81	898A1194	60972
50	6757	1.06	897A1194	35526
49	7003	1.71	898A0892	61547
45	7588	1.59	898A1294	60490
45	7607	1.62	898A0992	61547
44	7646	0.94	897A1294	35500
42	8121	0.84	897A1394	35500
42	8032	1.53	898A1394	59781
40	8427	1.46	898A1092	61547
37	9111	1.35	898A1494	59871
34	10081	1.20	898A1192	61535
32	10787	1.12	898A1594	59200
30	11420	1.06	898A1292	61535
28	12157	1.00	898A1694	59200
28	12114	1.02	898A1392	61522
26	12930	0.95	898A1794	58400
25	13717	0.90	898A1492	61522
23	14572	0.84	898A1894	58400

Series K Gearboxes : Motorised selection

45.0 KW MOTOR

Nominal Output Rev/Min	Output Torque Nm	Service Factor	Unit Selection	Overhung Load N
184	2242	1.15	896A0195	34000
179	2313	1.77	897A0195	35500
173	2386	2.12	898A0195	60725
152	2704	1.15	896A0295	34000
148	2783	1.77	897A0295	35500
144	2867	2.12	898A0295	60900
133	3090	0.97	896A0395	34000
128	3241	1.77	897A0395	35500
125	3310	2.12	898A0395	60575
119	3461	0.90	896A0495	34000
117	3521	1.75	897A0495	35500
115	3591	1.41	898A0193	61700
114	3640	2.12	898A0495	60600
110	3720	0.97	896A0595	34000
106	3891	1.77	897A0595	35500
104	3980	2.12	898A0595	60950
99	4169	0.90	896A0695	34000
98	4235	1.70	897A0695	35500
96	4315	1.41	898A0293	61700
94	4376	2.12	898A0695	61000
83	4983	1.41	898A0393	61700
81	5093	2.12	898A0795	60625
79	5216	1.35	897A0795	35500
76	5480	1.41	898A0493	61700
74	5625	1.27	897A0895	35500
73	5661	2.08	898A0895	60625
69	5991	1.41	898A0593	61700
67	6148	2.00	898A0995	60875
66	6261	1.15	897A0995	35500
63	6587	1.41	898A0693	61627
61	6752	1.06	897A1095	35500
61	6809	1.81	898A1095	60583
54	7666	1.41	898A0793	61554
51	8147	1.49	898A1195	60583
50	8218	0.87	897A1195	35500
49	8518	1.41	898A0893	61482
45	9228	1.31	898A1295	60050
45	9252	1.33	898A0993	61482
42	9768	1.26	898A1395	59167
40	10249	1.20	898A1093	61482
37	11081	1.11	898A1495	59167
34	12261	0.99	898A1193	61475
32	13119	0.92	898A1595	58400
30	13890	0.87	898A1293	61475
28	14786	0.82	898A1695	58400
28	14733	0.83	898A1393	61468

55.0 KW MOTOR

Nominal Output Rev/Min	Output Torque Nm	Service Factor	Unit Selection	Overhung Load N
173	2916	1.73	898A0196	60075
144	3504	1.73	898A0296	60366
125	4046	1.73	898A0396	59825
115	4390	1.15	898A0197	61700
114	4449	1.73	898A0496	59866
104	4864	1.73	898A0596	60450
96	5274	1.15	898A0297	61700
94	5349	1.73	898A0696	60533
83	6090	1.15	898A0397	61700
81	6225	1.73	898A0796	59908
76	6697	1.15	898A0497	61700
73	6919	1.71	898A0896	59741
69	7322	1.15	898A0597	61700
67	7514	1.64	898A0996	60325
63	8051	1.15	898A0697	61600
61	8323	1.48	898A1096	60098
54	9370	1.15	898A0797	61500
51	9957	1.22	898A1196	60098
49	10411	1.15	898A0897	61400
45	11279	1.07	898A1296	59500
45	11308	1.09	898A0997	61400
42	11939	1.03	898A1396	58400
40	12527	0.98	898A1097	61400
37	13544	0.91	898A1496	58400
34	14986	0.81	898A1197	61400

75.0 KW MOTOR

Nominal Output Rev/Min	Output Torque Nm	Service Factor	Unit Selection	Overhung Load N
174	3950	1.28	898A0198	58775
145	4746	1.28	898A0298	59300
126	5480	1.28	898A0398	58325
115	6027	1.28	898A0498	58400
104	6589	1.28	898A0598	59450
95	7245	1.28	898A0698	59600
82	8431	1.28	898A0798	58475
74	9372	1.26	898A0898	58175
68	10178	1.21	898A0998	59225
61	11273	1.09	898A1098	59127
51	13487	0.90	898A1198	59127

90.0 KW MOTOR

Nominal Output Rev/Min	Output Torque Nm	Service Factor	Unit Selection	Overhung Load N
174	4740	1.07	898A0199	57800
145	5696	1.07	898A0299	58500
126	6576	1.07	898A0399	57200
115	7232	1.07	898A0499	57300
104	7907	1.07	898A0599	58700
95	8694	1.07	898A0699	58900
82	10118	1.07	898A0799	57400
74	11246	1.05	898A0899	5700
68	12213	1.01	898A0999	58400
61	13528	0.91	898A1099	58400

Series K Gearboxes : Dimensions motorised

TRIPLE REDUCTION

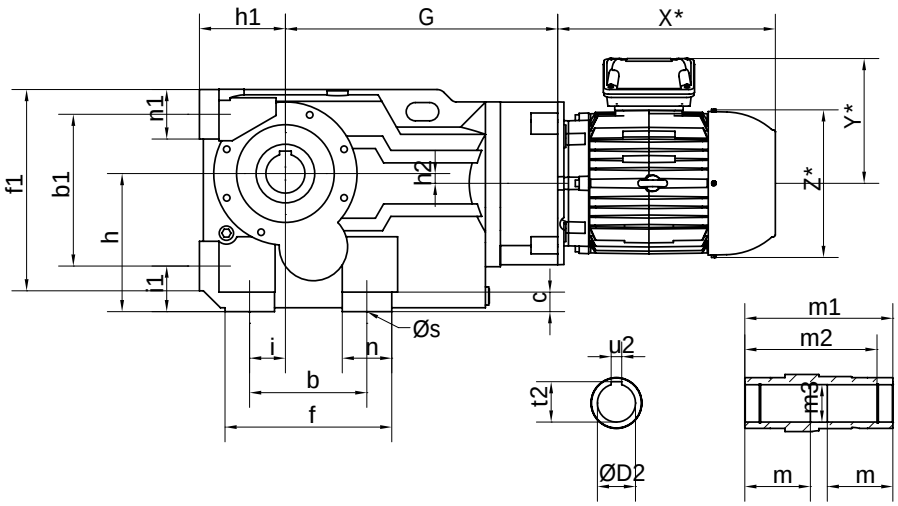

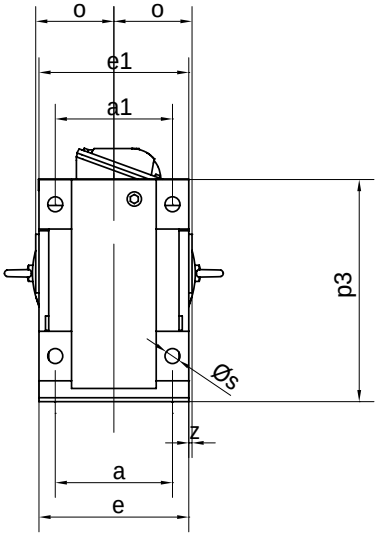

TRIPLE REDUCTION

Unit Size	Base Feet								End Feet							h2	o	p3	Øs	z	Hollow Bore Output Details						
	a	b	e	f	h	n	c	i	a1	b1	e1	f1	h1	n1	i1						ØD2	t2	u2	m	m1	m2	m3
890	100	110	120	143	100	38	11	28	100	115	120	152	63	38	32	16	60	167	11	0	30	33.5	8	52.5	120	105	30.3
891	120	130	145	168	112	38	16	35	120	130	145	171	71	40	37	13	75	187	11	2.5	35	38.5	10	66.0	150	132	35.3
892	130	130	157	170	132	40	15	30	130	150	157	192	80	40	45	5	83	217	14	4.5	40	43.5	12	73.0	166	142	40.3
893	140	120	170	176	140	55	20	30	140	160	170	208	90	48	45	13	90	233	14	5.0	40	43.5	12	80.0	180	156	40.3
894	165	150	200	210	180	60	27	40	165	200	200	263	112	55	55	25	105	288	18	5.0	50	54.0	14	92.5	210	183	50.5
895	180	180	230	256	212	76	30	55	180	233	230	309	132	76	70	15	120	341	23	5.0	60	64.5	18	105.0	240	210	60.5
896	240	240	290	340	265	100	35	75	240	295	290	395	160	100	75	10	150	420	27	5.0	70	75.0	20	132.5	300	270	70.5
897	270	280	340	390	315	110	40	95	270	360	340	455	200	115	95	41	175	513	34	5.0	80	85.5	22	155.0	350	313	80.5
898	330	350	400	470	375	120	45	115	330	420	400	540	225	120	110	65	205	590	39	5.0	100	106.5	28	180.0	410	373	100.5

G DIMENSION AND WEIGHT

Unit Size		Motor Frame Size												
		63	71	80	90	100	112	132	160	180	200	225	250	280
890	G	193	197	210	220	209	209	-	-	-	-	-	-	-
	kg	16	16	16	17	18	18	-	-	-	-	-	-	-
891	G	213	217	230	240	229	229	-	-	-	-	-	-	-
	kg	21	21	22	22	23	23	-	-	-	-	-	-	-
892	G	231	237	255	265	292	292	292	-	-	-	-	-	-
	kg	30	30	31	32	35	35	37	-	-	-	-	-	-
893	G	241	247	265	275	302	302	302	-	-	-	-	-	-
	kg	38	38	39	40	43	43	44	-	-	-	-	-	-
894	G	-	-	302	312	324	324	346	354	-	-	-	-	-
	kg	-	-	58	59	61	61	63	66	-	-	-	-	-
895	G	-	-	412	412	418	418	418	448	-	-	-	-	-
	kg	-	-	114	114	116	116	119	124	-	-	-	-	-
896	G	-	-	413	413	419	419	419	454	454	454	481	-	-
	kg	-	-	167	167	169	169	172	177	190	194	198	-	-
897	G	-	-	-	-	470	470	470	505	505	505	532	-	-
	kg	-	-	-	-	293	293	296	301	314	318	322	-	-
898	G	-	-	-	-	572	572	572	565	565	565	592	764	764
	kg	-	-	-	-	427	427	430	436	448	453	457	471	471

* For Motor Dimensions X,Y and Z please refer to motor tables on page 314

FIXING BOLTS**

Unit Size		Fasteners & Tightening Torque
890	Bolt Size	4 x M10 x 25mm long
	Tighten to	Tighten to - 50Nm
891	Bolt Size	4 x M10 x 30mm long
	Tighten to	Tighten to - 50Nm
892	Bolt Size	4 x M12 x 35mm long
	Tighten to	Tighten to - 85Nm
893	Bolt Size	4 x M12 x 40mm long
	Tighten to	Tighten to - 85Nm
894	Bolt Size	4 x M16 x 50mm long
	Tighten to	Tighten to - 200Nm
895	Bolt Size	4 x M20 x 60mm long
	Tighten to	Tighten to - 350Nm
896	Bolt Size	4 x M24 x 70mm long
	Tighten to	Tighten to - 610Nm
897	Bolt Size	4 x M30 x 80mm long
	Tighten to	Tighten to - 1220Nm
898	Bolt Size	4 x M36 x 100mm long
	Tighten to	Tighten to -2150Nm

** ISO Grade 8.8

Series K Gearboxes : Dimensions motorised

QUINTUPLE REDUCTION

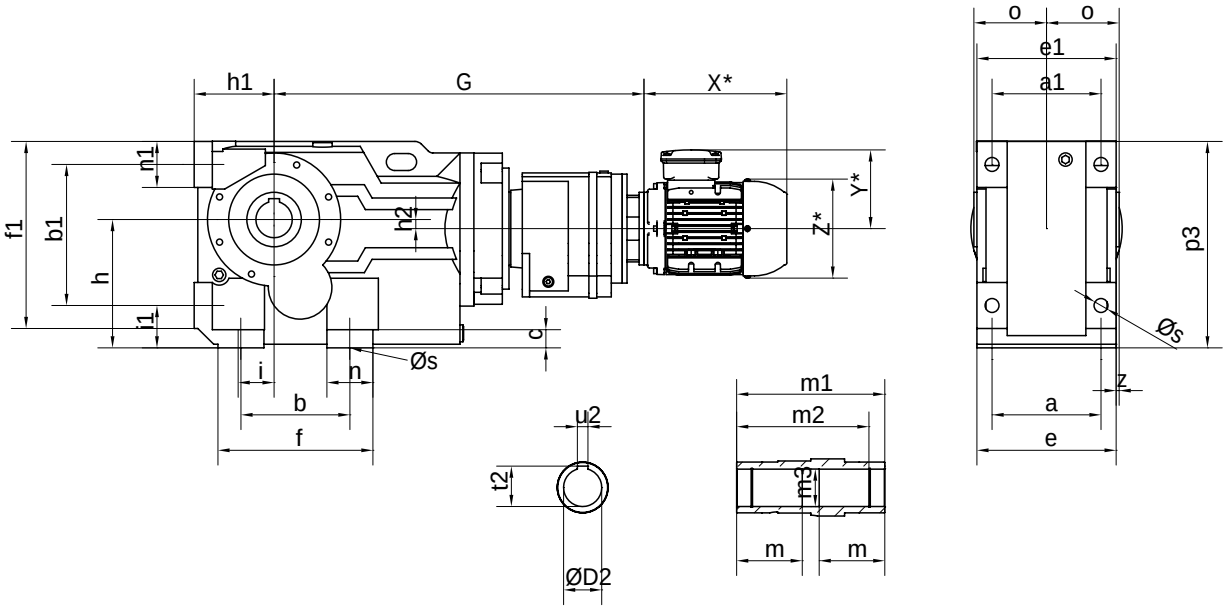

QUINTUPLE REDUCTION

Unit Size	Base Feet								End Feet							h2	o	p3	Øs	z	Hollow Bore Output Details						
	a	b	e	f	h	n	c	i	a1	b1	e1	f1	h1	n1	i1						ØD2	t2	u2	m	m1	m2	m3
890	100	110	120	143	100	38	11	28	100	115	120	152	63	38	32	16	60	167	11	0	30	33.5	8	52.5	120	105	30.3
891	120	130	145	168	112	38	16	35	120	130	145	171	71	40	37	13	75	187	11	2.5	35	38.5	10	66.0	150	132	35.3
892	130	130	157	170	132	40	15	30	130	150	157	192	80	40	45	5	83	217	14	4.5	40	43.5	12	73.0	166	142	40.3
893	140	120	170	176	140	55	20	30	140	160	170	208	90	48	45	13	90	233	14	5.0	40	43.5	12	80.0	180	156	40.3
894	165	150	200	210	180	60	27	40	165	200	200	263	112	55	55	25	105	288	18	5.0	50	54.0	14	92.5	210	183	50.5
895	180	180	230	256	212	76	30	55	180	233	230	309	132	76	70	15	120	341	23	5.0	60	64.5	18	105.0	240	210	60.5
896	240	240	290	340	265	100	35	75	240	295	290	395	160	100	75	10	150	420	27	5.0	70	75.0	20	132.5	300	270	70.5
897	270	280	340	390	315	110	40	95	270	360	340	455	200	115	95	41	175	513	34	5.0	80	85.5	22	155.0	350	313	80.5
898	330	350	400	470	375	120	45	115	330	420	400	540	225	120	110	65	205	590	39	5.0	100	106.5	28	180.0	410	373	100.5

G DIMENSION AND WEIGHT

Unit Size		Motor Frame Size												
		63	71	80	90	100	112	132	160	180	200	225	250	280
890	G	442	446	459	469	458	458							
	kg	25	24	25	26	28	28							
891	G	470	474	487	497	486	486							
	kg	30	30	30	31	33	33							
892	G	535	539	552	562	551	551							
	kg	44	44	44	45	47	47							
893	G	555	559	572	582	571	571							
	kg	52	52	52	53	55	55							
894	G	614	618	631	641	630	630							
	kg	70	70	70	71	73	73							
895	G	719	725	743	753	780	780	780						
	kg	139	139	139	140	142	142	145						
896	G	783	789	807	817	844	844	844						
	kg	197	197	197	198	200	200	203						
897	G			952	962	974	974	996	1004					
	kg			321	322	325	325	327	330					
898	G			1079	1089	1101	1101	1123	1131					
	kg			481	482	485	485	487	490					

* For Motor Dimensions X,Y and Z please refer to motor tables on page 314

FIXING BOLTS**

Unit Size		
890	Bolt Size	4 x M10 x 25mm long
	Tighten to	Tighten to - 50Nm
891	Bolt Size	4 x M10 x 30mm long
	Tighten to	Tighten to - 50Nm
892	Bolt Size	4 x M12 x 35mm long
	Tighten to	Tighten to - 85Nm
893	Bolt Size	4 x M12 x 40mm long
	Tighten to	Tighten to - 85Nm
894	Bolt Size	4 x M16 x 50mm long
	Tighten to	Tighten to - 200Nm
895	Bolt Size	4 x M20 x 60mm long
	Tighten to	Tighten to - 350Nm
896	Bolt Size	4 x M24 x 70mm long
	Tighten to	Tighten to - 610Nm
897	Bolt Size	4 x M30 x 80mm long
	Tighten to	Tighten to - 1220Nm
898	Bolt Size	4 x M36 x 100mm long
	Tighten to	Tighten to -2150Nm

** ISO Grade 8.8

Series K Gearboxes : Non-motorised selection

SELECTION OF NON-MOTORISED REDUCER UNITS

(a) Service Factor
From Table 1 select the Mechanical Service Factor (Fm) applicable to the drive. If the unit is to be subjected to frequent stop/starts in excess of 10 times per day then multiply factor Fm by Factor Fs from table 2.

(b) Power Required
Determine either the absorbed torque (Nm) or the input power (kW) required by the machine. The absorbed Torque can be calculated using the following formula:

$$M_2 = \frac{P_2 \times 9550}{n_2}$$

M_2 = required output torque (Nm)
P_2 = absorbed power (kW)
n_2 = machine speed (Rev/Min)

(c) Design Power
Multiply either the absorbed torque (Nm) or the power (kW) by the service factor determined in (a)

(d) Ratio Required
Divide the input shaft speed by the required output shaft speed to determine the gear ratio.

(e) Unit Selection
In the selection pages: 295 to 301 refer to the gear ratio closest to the value determined in step (d).

Check in column 3 for the nearest input shaft speed, then read across the table at this speed until a unit is found with either an output torque or input power that equals or exceeds the design power value determined in step (c) above. Column 4 gives the approximate output shaft speed for the selected speed and ratio combination.

TABLE 1 - MECHANICAL SERVICE FACTOR (Fm)

Types of Driven Machine	Operational Hours		
	Under 3	3 to 10	Over 10
Uniform Loads Agitators and Mixers – liquid or semi-liquid Blowers – centrifugal Bottling Machines Conveyors and Elevators – uniformly loaded Cookers Laundry Washing Machines – non-reversing Line Shafts Pumps – centrifugal and gear Wire Drawing Machines	0.80	1.00	1.25
Moderate Shock Loads Agitators and Mixers – variable density Conveyors – not uniformly loaded Cranes travel motion and hoisting Drawbench Feeders – pulsating load Hoists Kilns Laundry Tumblers Lifts Pumps – reciprocating with 3 or more cylinders Pump and Paper Making Machinery Rubber Mixers and Calendars Screens – rotary Textile Machinery	1.00	1.25	1.50
Heavy Shock Loads Brick Presses Briquetting Machines Conveyors – reciprocating and shaker Crushers Feeders – reciprocating Hammer Mills Pumps – reciprocating, 1 or 2 cylinders Rubber Masticators Screens – vibrating	1.50	1.75	2.00

TABLE 2 - STARTING FACTOR (Fs)

	Start/stops per hour					
	Up to 1	5	10	40	60	>200
Factor Fs	1.00	1.03	1.06	1.10	1.15	1.20

For ATEX certified gear units please consult your local Authorised Distributor.

Series K Gearboxes : Non-motorised selection

TRIPLE REDUCTION RATINGS SIZES 890 - 895

Ratio Code	Nominal Ratio	Input Speed rpm	Output Speed rpm	890			891			892			893			894			895		
				Input Power kW	Output Torque Nm	OHL Fra (kN)	Input Power kW	Output Torque Nm	OHL Fra (kN)	Input Power kW	Output Torque Nm	OHL Fra (kN)	Input Power kW	Output Torque Nm	OHL Fra (kN)	Input Power kW	Output Torque Nm	OHL Fra (kN)	Input Power kW	Output Torque Nm	OHL Fra (kN)
01	8	2900	348	4.49	118	2.88	8.48	215	3.23	12.70	323	2.33	18.30	459	3.55	26.10	705	4.10	41.30	1050	6.00
		1450	174	2.60	137	3.46	5.02	256	3.67	7.66	394	2.65	11.10	559	3.92	13.10	709	6.00	20.70	1060	6.00
		960	115	1.87	150	4.04	3.61	279	4.33	5.50	429	3.20	7.95	608	4.71	8.65	711	7.40	13.70	1060	6.00
		725	87	1.50	159	4.49	2.88	296	4.84	4.37	451	3.66	6.31	640	5.27	6.53	712	8.50	10.30	1060	6.00
03	11	2900	258	3.78	135	3.02	7.16	255	3.33	10.60	381	2.35	15.40	545	3.56	25.80	968	4.12	41.30	1500	6.00
		1450	129	2.17	155	3.71	4.10	294	3.93	6.19	448	2.84	9.01	641	4.20	13.10	985	6.02	20.70	1500	6.00
		960	85	1.57	170	4.34	2.95	320	4.65	4.42	484	3.45	6.43	693	5.05	8.65	987	7.42	13.70	1510	6.00
		725	64	1.25	179	4.83	2.35	338	5.13	3.52	511	3.94	5.12	731	5.73	6.53	988	8.53	10.30	1510	6.00
04	12	2900	227	3.47	141	3.15	6.73	265	3.44	9.93	401	2.37	14.50	574	3.57	24.20	1020	4.13	41.30	1660	6.00
		1450	113	2.00	163	3.97	3.86	305	4.20	5.74	466	3.04	8.38	669	4.47	13.10	1110	6.04	20.70	1670	6.00
		960	75	1.44	177	4.65	2.77	331	4.97	4.09	503	3.69	5.98	721	5.40	8.65	1110	7.44	13.70	1680	6.00
		725	57	1.14	187	5.17	2.20	349	5.42	3.26	531	4.23	4.76	761	6.20	6.53	1110	8.55	10.30	1680	6.00
05	14	2900	200	3.21	147	3.29	6.19	277	3.54	9.29	421	2.38	13.60	605	3.57	23.10	1070	4.15	41.10	1840	6.00
		1450	100	1.85	171	4.22	3.55	319	4.46	5.32	485	3.23	7.77	696	4.75	13.10	1220	6.06	20.70	1860	6.00
		960	66	1.33	185	4.95	2.54	346	5.28	3.78	522	3.94	5.54	750	5.74	8.65	1220	7.46	13.70	1860	6.40
		725	50	1.06	195	5.50	2.02	364	5.71	3.01	551	4.51	4.41	791	6.66	6.53	1220	8.58	10.30	1870	6.80
07	18	2900	156	2.71	159	3.42	5.27	299	3.64	7.88	454	2.40	11.60	655	3.58	19.60	1190	4.16	34.70	2010	6.00
		1450	78	1.56	184	4.47	3.02	344	4.72	4.48	519	3.42	6.58	748	5.02	11.10	1350	6.08	19.70	2300	6.00
		960	52	1.12	200	5.25	2.16	372	5.60	3.20	561	4.18	4.70	809	6.08	7.93	1460	7.48	13.70	2410	6.80
		725	39	0.89	210	5.84	1.67	382	6.00	2.55	592	4.79	3.63	827	7.12	6.32	1540	8.60	10.30	2410	8.50
08	20	2900	145	2.57	163	3.61	4.83	312	3.84	7.21	471	2.57	10.60	681	3.82	17.90	1240	4.43	31.60	2060	6.00
		1450	73	1.48	189	4.72	2.76	358	4.99	4.09	537	3.65	6.02	777	5.44	10.10	1400	6.46	17.90	2350	6.40
		960	48	1.06	204	5.55	1.98	387	5.80	2.92	581	4.46	4.24	826	6.56	7.25	1520	7.99	13.10	2590	7.40
		725	36	0.85	217	6.00	1.54	400	6.00	2.33	613	5.18	3.20	827	7.56	5.77	1600	9.30	10.30	2700	9.20
10	25	2900	115	2.19	175	3.80	4.19	332	4.04	6.35	495	2.73	9.36	718	4.05	15.70	1320	4.70	26.70	2140	6.00
		1450	57	1.25	201	4.97	2.39	380	5.26	3.60	563	3.89	5.31	817	5.85	8.85	1490	6.83	15.20	2440	6.80
		960	38	0.90	218	5.84	1.71	411	6.00	2.57	609	4.74	3.55	827	7.04	6.33	1610	8.50	11.10	2700	8.10
		725	29	0.70	225	6.00	1.37	438	6.00	2.05	644	5.56	2.68	827	8.00	4.96	1670	10.00	8.39	2700	9.90
11	28	2900	101	2.01	182	3.98	3.89	342	4.24	5.73	514	2.90	8.46	747	4.29	14.70	1350	4.96	24.30	2190	6.00
		1450	51	1.14	208	5.22	2.22	391	5.52	3.24	584	4.12	4.67	826	6.27	8.26	1530	7.21	14.00	2530	6.80
		960	34	0.82	225	6.00	1.59	423	6.00	2.32	632	5.02	3.09	827	7.52	5.91	1650	9.00	9.87	2700	8.70
		725	25	0.62	225	6.00	1.22	430	6.00	1.82	659	5.95	2.33	827	8.00	4.51	1670	10.70	7.45	2700	10.70
12	32	2900	89	1.82	189	4.17	3.55	354	4.44	5.09	532	3.06	7.54	774	4.52	13.20	1390	5.23	21.50	2250	6.00
		1450	44	1.04	215	5.47	2.02	404	5.79	2.90	607	4.35	4.02	826	6.68	7.44	1580	7.58	12.60	2640	7.60
		960	29	0.71	225	6.00	1.44	435	6.00	2.08	658	5.30	2.66	827	8.00	5.20	1670	9.51	8.48	2700	9.30
		725	22	0.54	225	6.00	1.09	435	6.00	1.57	659	6.33	2.01	827	8.00	3.92	1670	11.40	6.40	2700	11.40
13	36	2900	80	1.69	194	3.42	3.31	375	3.42	4.79	559	3.13	7.02	805	4.68	12.10	1450	5.49	19.80	2300	6.30
		1450	40	0.96	221	5.74	1.89	428	6.00	2.72	638	4.42	3.59	827	7.15	6.90	1660	7.96	11.60	2700	8.00
		960	26	0.64	225	6.00	1.29	441	6.00	1.86	659	5.68	2.38	827	8.00	4.59	1670	10.40	7.66	2700	10.60
		725	20	0.49	225	6.00	0.97	441	6.00	1.40	659	6.76	1.80	827	8.00	3.47	1670	12.10	5.78	2700	12.50
14	40	2900	72	1.56	198	3.80	3.00	375	3.99	4.46	555	3.37	6.63	811	5.12	11.10	1470	5.88	18.30	2340	6.40
		1450	36	0.88	225	6.00	1.71	428	6.00	2.53	634	4.83	3.37	827	7.36	6.29	1670	8.69	10.60	2700	8.60
		960	24	0.58	225	6.00	1.17	441	6.00	1.74	659	6.06	2.23	827	8.00	4.16	1670	11.40	6.99	2700	12.00
		725	18	0.44	225	6.00	0.88	441	6.00	1.32	659	7.02	1.68	827	8.00	3.14	1670	12.80	5.28	2700	13.60
15	45	2900	66	1.45	203	4.19	2.70	388	4.56	3.91	578	3.61	5.70	826	5.55	10.00	1520	6.27	16.60	2390	6.60
		1450	33	0.80	225	6.00	1.53	441	6.00	2.22	658	5.24	2.85	827	7.58	5.49	1670	9.43	9.35	2700	9.20
		960	22	0.53	225	6.00	1.01	441	6.00	1.47	659	6.43	1.88	827	8.00	3.64	1670	12.30	6.18	2700	13.30
		725	16	0.40	225	6.00	0.77	441	6.00	1.11	659	7.50	1.42	827	8.00	2.74	1670	13.50	4.67	2700	14.80
16	50	2900	56	1.29	211	4.57	2.53	395	5.12	3.72	586	3.85	5.34	826	5.99	9.10	1560	6.66	15.10	2450	6.70
		1450	28	0.69	225	6.00	1.41	441	6.00	2.08	658	5.64	2.67	827	7.79	4.86	1670	10.20	8.29	2700	9.90
		960	19	0.45	225	6.00	0.93	441	6.00	1.38	659	6.81	1.76	827	8.00	3.22	1670	13.20	5.48	2700	14.60
		725	14	0.34	225	6.00	0.70	441	6.00	1.04	659	7.50	1.33	827	8.00	2.43	1670	14.20	4.14	2700	15.70
18	63	2900	47	1.12	219	4.95	2.20	412	5.69	3.15	615	4.09	4.31	826	6.42	8.13	1620	7.05	13.20	2590	6.80
		1450	23	0.57	225	6.00	1.18	441	6.00	1.68	659	6.05	2.15	827	8.00	4.20	1670	10.90	6.84	2700	10.60
		960	15	0.38	225	6.00	0.78	441	6.00	1.11	659	7.16	1.42	827	8.00	2.78	1670	13.90	4.53	2700	15.70
		725	12	0.29	225	6.00	0.59	441	6.00	0.84	659	7.50	1.07	827	8.00	2.10	1670	15.00	3.42	2700	15.70
19	71	2900	40	0.98	225	5.64	1.91	429	6.00	2.77	638	4.37	3.66	827	6.95	7.06	1670	7.91	11.80	2700	7.70
		1450	20	0.49	225	6.00	0.96	431	6.00	1.43	659	6.55	1.83	827	8.00	3.52	1670	11.90	5.87	2700	11.70
		960	13	0.32	225	6.00	0.64	431	6.00	0.94	659	7.50	1.21	827	8.00	2.33	1670	14.60	3.89	2700	15.70
		725	10	0.25	225	6.00	0.48	431	6.00	0.71	659	7.50	0.91	827	8.00	1.76	1670	15.00	2.93	2700	15.70
20	80	2900	36	0.89	225	6.00	1.72	433	6.00	2.58	650	4.66	3.34	827	7.48	6.45	1670	8.78	10.70	2700	8.70
		1450	18	0.44	225	6.00	0.86	433	6.00	1.31	659	7.04	1.67	827	8.00	3.22	1670	12.80	5.35	2700	12.80
		960	12	0.29	225	6.00	0.57	434	6.00	0.86	659	7.50	1.10	827	8.00	2.13	1670	15.00	3.54	2700	15.70
		725	9	0.22	225	6.00	0.43	434	6.00	0.65	659	7.50	0.83	827	8.00	1.61	1670	15.00	2.67	2700	15.70
22	100	2900	30	0.61	185	6.00	1.36	400	6.00	2.14	658	4.94	2.73	827	8.00	5.38	1670	9.64	8.74	2700	9.20
		1450	15	0.30	186	6.00	0.70	410	6.00	1.07	659	7.50	1.36	827	8.00	2.69	1670	13.50	4.37	2700	15.70
		960	10	0.20	186	6.00	0.48	425	6.00	0.71	659	7.50	0.90	827	8.00	1.78	1670	15.00	2.89	2700	15.70
		725	7	0.15	186	6.00	0.37	435	6.00	0.53	659	7.50	0.68	827	8.00	1.34	1670	15.00	2.18	2700	15.70
23	112	2900	26	0.46	159	6.00	1.23	409	6.00	1.92	659	5.22	2.45	827	8.00	4.56	1620	10.50	8.01	2700	10.50
		1450	13	0.23	159	6.00	0.63	419	6.00	0.96	659	7.50	1.23	827	8.00	2.28	1630	14.10	4.00	2700	15.70
		960	9	0.15	159	6.00	0.43	434	6.00	0.63	659	7.50	0.81	827	8.00	1.51	1630	15.00	2.65	2700	15.70
		725	7	0.11	159	6.00	0.33	441	6.00	0.48	659	7.50	0.61	827	8.00	1.14	1630	15.00	2.00	2700	15.70
24	125	2900	23	0.40	157	6.00	1.17	441	6.00	1.58	607	6.41	1.58	595	8.00	3.49	1380	11.00	6.98	2700	10.80
		1450	12	0.20	157	6.00	0.58	441	6.00	0.79	608	7.50	0.79	596	8.00	1.75	1380	15.00	3.49	2700	15.70
		960	8	0.13	157	6.00	0.39	441	6.00	0.52	608	7.50	0.52	596	8.00	1.16	1380	15.00	2.31	2700	15.70
		725	6	0.10	157	6.00	0.29	441	6.00	0.40	608	7.50	0.40	596	8.00	0.87	1380	15.00	1.74	2700	15.70

Series K Gearboxes : Non-motorised selection

TRIPLE REDUCTION RATINGS SIZES 896 - 898

Ratio Code	Nominal Ratio	Input Speed Rev/Min	Output Speed Rev/Min	896			897			898		
				Input Power kW	Output Torque Nm	OHL Fra (kN)	Output Torque Nm	Input Power kW	OHL Fra (kN)	Output Torque Nm	Input Power kW	OHL Fra (kN)
01	8	2900	361	82.80	2090	22.90	156.00	4070	22.90	195.00	5240	56.50
		1450	180	50.70	2570	25.20	78.20	4090	25.20	97.40	5260	56.50
		960	119	37.80	2910	27.70	51.80	4100	34.00	64.50	5260	56.50
		725	90	30.00	3050	30.00	39.10	4100	34.00	48.70	5260	56.60
02	10	2900	300	82.80	2510	22.90	156.00	4890	22.90	195.00	6300	56.50
		1450	150	50.70	3100	25.20	78.20	4920	25.20	97.40	6320	56.50
		960	99	37.80	3500	27.70	51.80	4920	34.00	64.50	6320	56.50
		725	75	29.90	3670	30.00	39.10	4930	34.00	48.70	6330	56.60
03	11	2900	262	69.80	2430	23.50	132.00	4820	25.70	195.00	7290	56.50
		1450	131	42.80	2990	26.50	78.20	5730	29.60	97.40	7300	56.50
		960	87	30.60	3240	29.00	51.80	5730	35.80	64.50	7300	56.50
		725	66	24.00	3370	31.00	39.10	5740	36.30	48.70	7310	57.80
04	12	2900	234	65.50	2560	24.10	126.00	5010	28.50	195.00	8010	56.50
		1450	117	40.00	3130	27.70	77.50	6170	34.00	97.40	8020	56.50
		960	77	28.20	3350	30.30	51.80	6240	37.60	64.50	8020	56.50
		725	58	22.30	3510	32.00	39.10	6240	38.60	48.70	8030	59.00
05	14	2900	218	69.80	2920	24.60	132.00	5790	31.20	195.00	8760	56.50
		1450	109	42.80	3600	29.00	78.20	6880	35.80	97.40	8770	56.50
		960	72	28.80	3670	31.70	51.80	6890	40.10	64.50	8780	57.70
		725	54	21.70	3670	34.00	39.10	6890	43.10	48.70	8780	60.10
06	16	2900	194	65.50	3070	24.60	126.00	6020	31.20	195.00	9630	56.50
		1450	97	38.90	3670	29.50	75.10	7190	36.40	97.40	9640	56.50
		960	64	25.70	3670	32.50	49.70	7190	41.50	64.50	9640	57.80
		725	49	19.40	3670	34.00	37.50	7190	43.10	48.70	9650	61.30
07	18	2900	162	52.80	2980	25.20	101.00	5920	34.00	163.00	9410	56.50
		1450	81	30.60	3480	30.30	59.70	7040	37.60	97.40	11300	56.50
		960	54	21.30	3670	33.10	40.30	7190	42.50	64.50	11300	58.90
		725	40	16.10	3670	34.00	30.40	7190	43.10	48.70	11300	61.30
08	20	2900	145	49.30	3110	26.50	96.10	6100	34.90	153.00	9800	56.50
		1450	72	28.10	3560	31.20	56.30	7160	39.00	92.20	11800	57.70
		960	48	19.10	3670	34.00	37.40	7190	43.10	62.40	12100	61.30
		725	36	14.40	3670	34.00	28.20	7190	43.10	47.10	12100	61.30
09	22	2900	134	52.80	3590	27.00	101.00	7110	35.40	163.00	11300	56.60
		1450	67	26.90	3670	32.50	50.80	7190	41.50	88.50	12300	59.80
		960	44	17.80	3670	34.00	33.60	7190	43.10	58.60	12300	61.30
		725	34	13.40	3670	34.00	25.40	7190	43.10	44.20	12300	61.30
10	25	2900	120	48.30	3670	27.80	94.30	7190	35.80	153.00	11800	56.50
		1450	60	24.10	3670	32.20	47.10	7190	40.40	79.90	12300	58.90
		960	40	15.90	3670	34.00	31.10	7190	43.10	52.90	12300	61.30
		725	30	12.00	3670	34.00	23.50	7190	43.10	39.90	12300	61.30
11	28	2900	104	39.40	3460	29.00	76.10	7050	36.70	124.00	11400	56.50
		1450	52	20.80	3670	34.00	38.70	7190	43.10	65.70	12100	61.30
		960	35	13.80	3670	34.00	25.60	7190	43.10	43.50	12100	61.30
		725	26	10.40	3670	34.00	19.30	7190	43.10	32.80	12100	61.30
12	32	2900	92	35.60	3550	30.30	68.60	7190	37.60	112.00	11700	56.50
		1450	46	18.30	3670	34.00	34.20	7190	43.10	58.00	12100	61.30
		960	30	12.10	3670	34.00	22.60	7190	43.10	38.40	12100	61.30
		725	23	9.10	3670	34.00	17.10	7190	43.10	29.00	12100	61.30
13	36	2900	87	34.80	3670	31.80	64.70	7190	39.50	111.00	12300	59.30
		1450	43	17.30	3670	34.00	32.20	7190	43.10	55.70	12300	61.30
		960	29	11.50	3670	34.00	21.30	7190	43.10	36.80	12300	61.30
		725	22	8.70	3670	34.00	16.10	7190	43.10	27.80	12300	61.30
14	40	2900	73	30.50	3670	32.40	57.10	7190	40.40	98.40	12300	59.80
		1450	36	15.20	3670	34.00	28.50	7190	43.10	49.10	12300	61.30
		960	24	10.10	3670	34.00	18.80	7190	43.10	32.50	12300	61.30
		725	18	7.60	3670	34.00	14.20	7190	43.10	24.50	12300	61.30
15	45	2900	64	25.90	3670	32.90	50.10	7190	41.30	81.80	12100	60.30
		1450	32	12.90	3670	34.00	25.00	7190	43.10	40.80	12100	61.30
		960	21	8.50	3670	34.00	16.50	7190	43.10	27.00	12100	61.30
		725	16	6.50	3670	34.00	12.50	7190	43.10	20.40	12100	61.30
16	50	2900	58	23.30	3670	33.50	45.10	7190	42.20	72.50	12100	60.80
		1450	29	11.60	3670	34.00	22.50	7190	43.10	36.20	12100	61.30
		960	19	7.70	3670	34.00	14.90	7190	43.10	24.00	12100	61.30
		725	15	5.80	3670	34.00	11.20	7190	43.10	18.10	12100	61.30
17	56	2900	52	21.60	3670	34.00	41.70	7190	43.10	69.30	12300	61.30
		1450	26	10.70	3670	34.00	20.80	7190	43.10	34.60	12300	61.30
		960	17	7.10	3670	34.00	13.80	7190	43.10	22.90	12300	61.30
		725	13	5.40	3670	34.00	10.40	7190	43.10	17.30	12300	61.30

Series K Gearboxes : Non-motorised selection

TRIPLE REDUCTION RATINGS SIZES 896 - 898

Ratio Code	Nominal Ratio	Input Speed Rev/Min	Output Speed Rev/Min	896			897			898		
				Input Power kW	Output Torque Nm	OHL Fra (kN)	Output Torque Nm	Input Power kW	OHL Fra (kN)	Output Torque Nm	Input Power kW	OHL Fra (kN)
18	63	2900	46	19.40	3670	34.00	37.60	7190	43.10	61.40	12300	61.30
		1450	23	9.70	3670	34.00	18.70	7190	43.10	30.70	12300	61.30
		960	15	6.40	3670	34.00	12.40	7190	43.10	20.30	12300	61.30
		725	12	4.80	3670	34.00	9.40	7190	43.10	15.30	12300	61.30
19	71	2900	41	16.50	3670	34.00	31.60	7190	43.10	51.50	12100	61.30
		1450	20	8.30	3670	34.00	15.80	7190	43.10	25.70	12100	61.30
		960	14	5.50	3670	34.00	10.40	7190	43.10	17.00	12100	61.30
		725	10	4.10	3670	34.00	7.90	7190	43.10	12.90	12100	61.30
20	80	2900	36	15.00	3670	34.00	27.50	7190	43.10	46.30	12100	61.30
		1450	18	7.50	3670	34.00	13.70	7190	43.10	23.10	12100	61.30
		960	12	4.90	3670	34.00	9.10	7190	43.10	15.30	12100	61.30
		725	9	3.70	3670	34.00	6.90	7190	43.10	11.60	12100	61.30
21	90	2900	32	13.80	3670	34.00	26.30	7190	43.10	43.60	12300	61.30
		1450	16	6.90	3670	34.00	13.10	7190	43.10	21.80	12300	61.30
		960	11	4.50	3670	34.00	8.70	7190	43.10	14.40	12300	61.30
		725	8	3.40	3670	34.00	6.60	7190	43.10	10.90	12300	61.30
22	100	2900	29	12.50	3670	34.00	22.90	7190	43.10	39.20	12300	61.30
		1450	15	6.20	3670	34.00	11.40	7190	43.10	19.60	12300	61.30
		960	10	4.10	3670	34.00	7.60	7190	43.10	13.00	12300	61.30
		725	7	3.10	3670	34.00	5.70	7190	43.10	9.80	12300	61.30
23	112	2900	26	10.90	3670	34.00	20.40	7190	43.10	33.70	12100	61.30
		1450	13	5.40	3670	34.00	10.20	7190	43.10	16.90	12100	61.30
		960	9	3.60	3670	34.00	6.70	7190	43.10	11.20	12100	61.30
		725	6	2.70	3670	34.00	5.10	7190	43.10	8.40	12100	61.30
24	125	2900	23	9.70	3670	34.00	19.00	7190	43.10	31.70	12100	61.30
		1450	12	4.90	3670	34.00	9.50	7190	43.10	15.80	12100	61.30
		960	8	3.20	3670	34.00	6.30	7190	43.10	10.50	12100	61.30
		725	6	2.40	3670	34.00	4.70	7190	43.10	7.90	12100	61.30
25	140	2900	21	9.10	3670	34.00	17.00	7190	43.10	28.60	12300	61.30
		1450	10	4.50	3670	34.00	8.50	7190	43.10	14.30	12300	61.30
		960	7	3.00	3670	34.00	5.60	7190	43.10	9.40	12300	61.30
		725	5	2.30	3670	34.00	4.20	7190	43.10	7.10	12300	61.30
26	160	2900	18	8.10	3670	34.00	15.80	7190	43.10	26.80	12300	61.30
		1450	9	4.00	3670	34.00	7.90	7190	43.10	13.40	12300	61.30
		960	6	2.70	3670	34.00	5.20	7190	43.10	8.90	12300	61.30
		725	5	2.00	3670	34.00	3.90	7190	43.10	6.70	12300	61.30

Series K Gearboxes : Non-motorised selection

QUINTUPLE REDUCTION RATINGS SIZES 890 - 895

Ratio Code	Nominal Ratio	Input Speed rpm	Output Speed rpm	890			891			892			893			894			895		
				Input Power kW	Output Torque Nm	OHL Fra (kN)	Input Power kW	Output Torque Nm	OHL Fra (kN)	Input Power kW	Output Torque Nm	OHL Fra (kN)	Input Power kW	Output Torque Nm	OHL Fra (kN)	Input Power kW	Output Torque Nm	OHL Fra (kN)	Input Power kW	Output Torque Nm	OHL Fra (kN)
30	125	2900	22.69	0.560	225	6.00	1.050	440	6.00	1.780	660	7.50	2.270	825	8.00	4.250	1600	15.00	6.550	2710	15.70
		1450	11.35	0.280	225	6.00	0.520	440	6.00	0.890	660	7.50	1.130	825	8.00	2.130	1600	15.00	3.280	2710	15.70
		960	7.51	0.190	225	6.00	0.350	440	6.00	0.590	660	7.50	0.750	825	8.00	1.410	1600	15.00	2.170	2710	15.70
		725	5.63	0.140	225	6.00	0.260	440	6.00	0.440	660	7.50	0.560	825	8.00	1.060	1600	15.00	1.630	2710	15.70
31	140	2900	19.95	0.490	225	6.00	0.950	440	6.00	1.480	660	7.50	1.880	825	8.00	3.830	1600	15.00	5.990	2710	15.70
		1450	9.98	0.250	225	6.00	0.480	440	6.00	0.740	660	7.50	0.940	825	8.00	1.920	1600	15.00	2.990	2710	15.70
		960	6.6	0.160	225	6.00	0.310	440	6.00	0.490	660	7.50	0.620	825	8.00	1.270	1600	15.00	1.980	2710	15.70
		725	4.95	0.120	225	6.00	0.240	440	6.00	0.370	660	7.50	0.470	825	8.00	0.950	1600	15.00	1.490	2710	15.70
32	160	2900	17.61	0.440	225	6.00	0.830	440	6.00	1.340	660	7.50	1.710	825	8.00	3.480	1600	15.00	5.290	2710	15.70
		1450	8.81	0.220	225	6.00	0.410	440	6.00	0.670	660	7.50	0.850	825	8.00	1.740	1600	15.00	2.650	2710	15.70
		960	5.83	0.140	225	6.00	0.270	440	6.00	0.440	660	7.50	0.570	825	8.00	1.150	1600	15.00	1.750	2710	15.70
		725	4.37	0.110	225	6.00	0.210	440	6.00	0.330	660	7.50	0.420	825	8.00	0.860	1600	15.00	1.310	2710	15.70
33	200	2900	13.77	0.340	225	6.00	0.700	440	6.00	1.020	660	7.50	1.290	825	8.00	2.420	1600	15.00	3.800	2420	15.70
		1450	6.89	0.170	225	6.00	0.350	440	6.00	0.510	660	7.50	0.650	825	8.00	1.210	1600	15.00	1.900	2420	15.70
		960	4.56	0.110	225	6.00	0.230	440	6.00	0.340	660	7.50	0.430	825	8.00	0.800	1600	15.00	1.260	2420	15.70
		725	3.42	0.080	225	6.00	0.170	440	6.00	0.250	660	7.50	0.320	825	8.00	0.600	1600	15.00	0.940	2420	15.70
34	250	2900	12.78	0.320	225	6.00	0.550	440	6.00	0.800	660	7.50	1.020	825	8.00	2.190	1600	15.00	3.800	2710	15.70
		1450	6.39	0.160	225	6.00	0.270	440	6.00	0.400	660	7.50	0.510	825	8.00	1.100	1600	15.00	1.900	2710	15.70
		960	4.23	0.100	225	6.00	0.180	440	6.00	0.260	660	7.50	0.340	825	8.00	0.730	1600	15.00	1.260	2710	15.70
		725	3.17	0.079	225	6.00	0.140	440	6.00	0.200	660	7.50	0.250	825	8.00	0.540	1600	15.00	0.940	2710	15.70
35	280	2900	10.12	0.250	225	6.00	0.490	440	6.00	0.700	660	7.50	0.900	825	8.00	1.930	1600	15.00	3.230	2710	15.70
		1450	5.06	0.130	225	6.00	0.250	440	6.00	0.350	660	7.50	0.450	825	8.00	0.960	1600	15.00	1.620	2710	15.70
		960	3.35	0.083	225	6.00	0.160	440	6.00	0.230	660	7.50	0.300	825	8.00	0.640	1600	15.00	1.070	2710	15.70
		725	2.51	0.062	225	6.00	0.120	440	6.00	0.170	660	7.50	0.220	825	8.00	0.480	1600	15.00	0.800	2710	15.70
36	320	2900	8.93	0.220	225	6.00	0.440	440	6.00	0.670	660	7.50	0.850	825	8.00	1.680	1600	15.00	2.920	2710	15.70
		1450	4.46	0.110	225	6.00	0.220	440	6.00	0.330	660	7.50	0.420	825	8.00	0.840	1600	15.00	1.460	2710	15.70
		960	2.96	0.073	225	6.00	0.140	440	6.00	0.220	660	7.50	0.280	825	8.00	0.560	1600	15.00	0.970	2710	15.70
		725	2.22	0.055	225	6.00	0.110	440	6.00	0.170	660	7.50	0.210	825	8.00	0.420	1600	15.00	0.720	2710	15.70
37	360	2900	7.81	0.190	225	6.00	0.400	440	6.00	0.600	660	7.50	0.770	825	8.00	1.370	1600	15.00	2.570	2710	15.70
		1450	3.91	0.097	225	6.00	0.200	440	6.00	0.300	660	7.50	0.380	825	8.00	0.680	1600	15.00	1.290	2710	15.70
		960	2.59	0.064	225	6.00	0.130	440	6.00	0.200	660	7.50	0.250	825	8.00	0.450	1600	15.00	0.850	2710	15.70
		725	1.94	0.048	225	6.00	0.098	440	6.00	0.150	660	7.50	0.190	825	8.00	0.340	1600	15.00	0.640	2710	15.70
38	400	2900	7.02	0.170	225	6.00	0.350	440	6.00	0.530	660	7.50	0.670	825	8.00	1.270	1650	15.00	2.160	2710	15.70
		1450	3.51	0.087	225	6.00	0.170	440	6.00	0.260	660	7.50	0.340	825	8.00	0.640	1650	15.00	1.080	2710	15.70
		960	2.32	0.058	225	6.00	0.110	440	6.00	0.180	660	7.50	0.220	825	8.00	0.420	1650	15.00	0.710	2710	15.70
		725	1.74	0.043	225	6.00	0.086	440	6.00	0.130	660	7.50	0.170	825	8.00	0.320	1650	15.00	0.540	2710	15.70
39	450	2900	6.37	0.160	225	6.00	0.310	440	6.00	0.470	660	7.50	0.590	825	8.00	1.130	1650	15.00	1.870	2710	15.70
		1450	3.19	0.079	225	6.00	0.160	440	6.00	0.230	660	7.50	0.300	825	8.00	0.570	1650	15.00	0.940	2710	15.70
		960	2.11	0.052	225	6.00	0.104	440	6.00	0.150	660	7.50	0.200	825	8.00	0.370	1650	15.00	0.620	2710	15.70
		725	1.58	0.039	225	6.00	0.078	440	6.00	0.120	660	7.50	0.150	825	8.00	0.280	1650	15.00	0.470	2710	15.70
40	500	2900	5.62	0.140	225	6.00	0.280	440	6.00	0.420	660	7.50	0.540	825	8.00	1.030	1650	15.00	1.710	2710	15.70
		1450	2.81	0.070	225	6.00	0.140	440	6.00	0.210	660	7.50	0.270	825	8.00	0.510	1650	15.00	0.860	2710	15.70
		960	1.86	0.046	225	6.00	0.092	440	6.00	0.140	660	7.50	0.180	825	8.00	0.340	1650	15.00	0.570	2710	15.70
		725	1.4	0.035	225	6.00	0.069	440	6.00	0.110	660	7.50	0.130	825	8.00	0.260	1650	15.00	0.430	2710	15.70
41	560	2900	5.11	0.130	225	6.00	0.240	440	6.00	0.370	660	7.50	0.470	825	8.00	0.890	1650	15.00	1.610	2710	15.70
		1450	2.55	0.063	225	6.00	0.120	440	6.00	0.180	660	7.50	0.230	825	8.00	0.450	1650	15.00	0.810	2710	15.70
		960	1.69	0.042	225	6.00	0.080	440	6.00	0.120	660	7.50	0.160	825	8.00	0.300	1650	15.00	0.530	2710	15.70
		725	1.27	0.031	225	6.00	0.060	440	6.00	0.090	660	7.50	0.120	825	8.00	0.220	1650	15.00	0.400	2710	15.70
42	630	2900	4.47	0.110	225	6.00	0.220	440	6.00	0.340	660	7.50	0.430	825	8.00	0.820	1650	15.00	1.350	2710	15.70
		1450	2.23	0.055	225	6.00	0.110	440	6.00	0.170	660	7.50	0.220	825	8.00	0.410	1650	15.00	0.680	2710	15.70
		960	1.48	0.037	225	6.00	0.072	440	6.00	0.110	660	7.50	0.140	825	8.00	0.270	1650	15.00	0.450	2710	15.70
		725	1.11	0.028	225	6.00	0.054	440	6.00	0.084	660	7.50	0.110	825	8.00	0.200	1650	15.00	0.340	2710	15.70
43	700	2900	4.12	0.100	225	6.00	0.200	440	6.00	0.290	660	7.50	0.370	825	8.00	0.720	1650	15.00	1.140	2710	15.70
		1450	2.06	0.051	225	6.00	0.100	440	6.00	0.150	660	7.50	0.190	825	8.00	0.360	1650	15.00	0.570	2710	15.70
		960	1.36	0.034	225	6.00	0.065	440	6.00	0.096	660	7.50	0.120	825	8.00	0.240	1650	15.00	0.380	2710	15.70
		725	1.02	0.025	225	6.00	0.049	440	6.00	0.072	660	7.50	0.092	825	8.00	0.180	1650	15.00	0.280	2710	15.70
44	800	2900	3.63	0.090	225	6.00	0.170	440	6.00	0.260	660	7.50	0.330	825	8.00	0.630	1650	15.00	1.070	2710	15.70
		1450	1.82	0.045	225	6.00	0.087	440	6.00	0.130	660	7.50	0.170	825	8.00	0.320	1650	15.00	0.530	2710	15.70
		960	1.2	0.030	225	6.00	0.058	440	6.00	0.086	660	7.50	0.110	825	8.00	0.210	1650	15.00	0.350	2710	15.70
		725	0.9	0.022	225	6.00	0.043	440	6.00	0.065	660	7.50	0.082	825	8.00	0.160	1650	15.00	0.270	2710	15.70
45	900	2900	3.18	0.079	225	6.00	0.160	440	6.00	0.230	660	7.50	0.300	825	8.00	0.570	1650	15.00	0.980	2710	15.70
		1450	1.59	0.039	225	6.00	0.079	440	6.00	0.120	660	7.50	0.150	825	8.00	0.290	1650	15.00	0.490	2710	15.70
		960	1.05	0.026	225	6.00	0.052	440	6.00	0.078	660	7.50	0.099	825	8.00	0.190	1650	15.00	0.320	2710	15.70
		725	0.79	0.020	225	6.00	0.039	440	6.00	0.058	660	7.50	0.074	825	8.00	0.140	1650	15.00	0.240	2710	15.70
46	1000	2900	2.86	0.071	225	6.00	0.140	440	6.00	0.200	660	7.50	0.260	825	8.00	0.500	1650	15.00	0.860	2710	15.70
		1450	1.43	0.035	225	6.00	0.070	440	6.00	0.100	660	7.50	0.130	825	8.00	0.250	1650	15.00	0.430	2710	15.70
		960	0.95	0.023	225	6.00	0.047	440	6.00	0.067	660	7.50	0.085	825	8.00	0.160	1650	15.00	0.280	2710	15.70
		725	0.71	0.018	225	6.00	0.035	440	6.00	0.050	660	7.50	0.064	825	8.00	0.120	1650	15.00	0.210	2710	15.70
47	1100	2900	2.59	0.064	225	6.00	0.130	440	6.00	0.180	660	7.50	0.230	825	8.00	0.440	1650	15.00	0.790	2710	15.70
		1450	1.3	0.032	225	6.00	0.064	440	6.00	0.090	660	7.50	0.110	825	8.00	0.220	1650	15.00	0.390	2710	15.70
		960	0.86	0.021	225	6.00	0.042	440	6.00	0.060	660	7.50	0.076	825	8.00	0.150	1650	15.00	0.260	2710	15.70
		725	0.64	0.016	225	6.00	0.032	440	6.00	0.045	660	7.50	0.057	825	8.00	0.110	1650	15.00	0.200	2710	15.70
48	1200	2900	2.45	0.061	225	6.00	0.110	440	6.00	0.170	660	7.50	0.220	825	8.00	0.420	1650	15.00	0.690	2710	15.70
		1450	1.23	0.030	225	6.00	0.055	440	6.00	0.086	660	7.50	0.110	825	8.00	0.210	1650	15.00	0.350	2710	15.70
		960	0.81	0.020	225	6.00	0.037	440	6.00	0.057	660	7.50	0.072	825	8.00	0.140	1650	15.00	0.230	2710	15.70
		725	0.61	0.015	225	6.00	0.028	440	6.00	0.043	660	7.50	0.054	825	8.00	0.100	1650	15.00	0.170	2710	15.70

Series K Gearboxes : Non-motorised selection

QUINTUPLE REDUCTION RATINGS SIZES 890 - 895

Ratio Code	Nominal Ratio	Input Speed rpm	Output Speed rpm	890			891			892			893			894			895		
				Input Power kW	Output Torque Nm	OHL Fra (kN)	Input Power kW	Output Torque Nm	OHL Fra (kN)	Input Power kW	Output Torque Nm	OHL Fra (kN)	Input Power kW	Output Torque Nm	OHL Fra (kN)	Input Power kW	Output Torque Nm	OHL Fra (kN)	Input Power kW	Output Torque Nm	OHL Fra (kN)
49	1400	2900	2.04	0.051	225	6.00	0.099	440	6.00	0.140	660	7.50	0.180	825	8.00	0.350	1650	15.00	0.590	2710	15.70
		1450	1.02	0.025	225	6.00	0.049	440	6.00	0.071	660	7.50	0.091	825	8.00	0.170	1650	15.00	0.290	2710	15.70
		960	0.68	0.017	225	6.00	0.033	440	6.00	0.047	660	7.50	0.060	825	8.00	0.110	1650	15.00	0.200	2710	15.70
		725	0.51	0.013	225	6.00	0.024	440	6.00	0.035	660	7.50	0.045	825	8.00	0.086	1650	15.00	0.150	2710	15.70
50	1600	2900	1.83	0.045	225	6.00	0.088	440	6.00	0.130	660	7.50	0.170	825	8.00	0.310	1650	15.00	0.520	2710	15.70
		1450	0.92	0.023	225	6.00	0.044	440	6.00	0.067	660	7.50	0.085	825	8.00	0.150	1650	15.00	0.260	2710	15.70
		960	0.61	0.015	225	6.00	0.029	440	6.00	0.044	660	7.50	0.056	825	8.00	0.100	1650	15.00	0.170	2710	15.70
		725	0.46	0.011	225	6.00	0.022	440	6.00	0.033	660	7.50	0.042	825	8.00	0.076	1650	15.00	0.130	2710	15.70
51	1800	2900	1.61	0.040	225	6.00	0.079	440	6.00	0.120	660	7.50	0.150	825	8.00	0.270	1650	15.00	0.480	2710	15.70
		1450	0.81	0.020	225	6.00	0.039	440	6.00	0.059	660	7.50	0.076	825	8.00	0.140	1650	15.00	0.240	2710	15.70
		960	0.53	0.013	225	6.00	0.026	440	6.00	0.039	660	7.50	0.050	825	8.00	0.090	1650	15.00	0.160	2710	15.70
		725	0.4	0.010	225	6.00	0.020	440	6.00	0.029	660	7.50	0.038	825	8.00	0.068	1650	15.00	0.120	2710	15.70
52	2000	2900	1.45	0.036	225	6.00	0.071	440	6.00	0.110	660	7.50	0.140	825	8.00	0.260	1650	15.00	0.430	2710	15.70
		1450	0.73	0.018	225	6.00	0.036	440	6.00	0.054	660	7.50	0.069	825	8.00	0.130	1650	15.00	0.220	2710	15.70
		960	0.48	0.012	225	6.00	0.024	440	6.00	0.036	660	7.50	0.045	825	8.00	0.088	1650	15.00	0.140	2710	15.70
		725	0.36	0.009	225	6.00	0.018	440	6.00	0.027	660	7.50	0.034	825	8.00	0.066	1650	15.00	0.110	2710	15.70
53	2200	2900	1.29	0.032	225	6.00	0.062	440	6.00	0.096	660	7.50	0.120	825	8.00	0.230	1650	15.00	0.390	2710	15.70
		1450	0.64	0.016	225	6.00	0.031	440	6.00	0.048	660	7.50	0.061	825	8.00	0.120	1650	15.00	0.200	2710	15.70
		960	0.43	0.011	225	6.00	0.021	440	6.00	0.032	660	7.50	0.040	825	8.00	0.078	1650	15.00	0.130	2710	15.70
		725	0.32	0.008	225	6.00	0.015	440	6.00	0.024	660	7.50	0.030	825	8.00	0.058	1650	15.00	0.098	2710	15.70
54	2500	2900	1.12	0.028	225	6.00	0.057	440	6.00	0.082	660	7.50	0.100	825	8.00	0.200	1650	15.00	0.320	2710	15.70
		1450	0.56	0.014	225	6.00	0.029	440	6.00	0.041	660	7.50	0.052	825	8.00	0.100	1650	15.00	0.160	2710	15.70
		960	0.37	0.009	225	6.00	0.019	440	6.00	0.027	660	7.50	0.035	825	8.00	0.067	1650	15.00	0.110	2710	15.70
		725	0.28	0.007	225	6.00	0.014	440	6.00	0.020	660	7.50	0.026	825	8.00	0.050	1650	15.00	0.080	2710	15.70
55	2800	2900	1.07	0.027	225	6.00	0.050	440	6.00	0.074	660	7.50	0.094	825	8.00	0.180	1650	15.00	0.310	2710	15.70
		1450	0.54	0.013	225	6.00	0.025	440	6.00	0.037	660	7.50	0.047	825	8.00	0.090	1650	15.00	0.150	2710	15.70
		960	0.36	0.009	225	6.00	0.017	440	6.00	0.025	660	7.50	0.031	825	8.00	0.060	1650	15.00	0.100	2710	15.70
		725	0.27	0.007	225	6.00	0.012	440	6.00	0.018	660	7.50	0.023	825	8.00	0.045	1650	15.00	0.076	2710	15.70
56	3200	2900	0.94	0.023	225	6.00	0.042	440	6.00	0.064	660	7.50	0.081	825	8.00	0.150	1650	15.00	0.280	2710	15.70
		1450	0.47	0.012	225	6.00	0.021	440	6.00	0.032	660	7.50	0.041	825	8.00	0.077	1650	15.00	0.140	2710	15.70
		960	0.31	0.008	225	6.00	0.014	440	6.00	0.021	660	7.50	0.027	825	8.00	0.051	1650	15.00	0.091	2710	15.70
		725	0.23	0.006	225	6.00	0.010	440	6.00	0.016	660	7.50	0.020	825	8.00	0.038	1650	15.00	0.068	2710	15.70
57	3600	2900	0.83	0.020	225	6.00	0.040	440	6.00	0.056	660	7.50	0.072	825	8.00	0.140	1650	15.00	0.220	2710	15.70
		1450	0.41	0.010	225	6.00	0.020	440	6.00	0.028	660	7.50	0.036	825	8.00	0.068	1650	15.00	0.110	2710	15.70
		960	0.27	0.007	225	6.00	0.013	440	6.00	0.019	660	7.50	0.024	825	8.00	0.045	1650	15.00	0.074	2710	15.70
		725	0.21	0.005	225	6.00	0.010	440	6.00	0.014	660	7.50	0.018	825	8.00	0.034	1650	15.00	0.056	2710	15.70
58	4000	2900	0.72	0.018	225	6.00	0.035	440	6.00	0.052	660	7.50	0.066	825	8.00	0.130	1650	15.00	0.200	2710	15.70
		1450	0.36	0.009	225	6.00	0.018	440	6.00	0.026	660	7.50	0.033	825	8.00	0.064	1650	15.00	0.100	2710	15.70
		960	0.24	0.006	225	6.00	0.012	440	6.00	0.017	660	7.50	0.022	825	8.00	0.043	1650	15.00	0.068	2710	15.70
		725	0.18	0.004	225	6.00	0.009	440	6.00	0.013	660	7.50	0.016	825	8.00	0.032	1650	15.00	0.051	2710	15.70
59	4500	2900	0.64	0.016	225	6.00	0.031	440	6.00	0.046	660	7.50	0.058	825	8.00	0.110	1650	15.00	0.180	2710	15.70
		1450	0.32	0.008	225	6.00	0.015	440	6.00	0.023	660	7.50	0.029	825	8.00	0.057	1650	15.00	0.092	2710	15.70
		960	0.21	0.005	225	6.00	0.010	440	6.00	0.150	660	7.50	0.019	825	8.00	0.038	1650	15.00	0.061	2710	15.70
		725	0.16	0.004	225	6.00	0.008	440	6.00	0.011	660	7.50	0.014	825	8.00	0.028	1650	15.00	0.046	2710	15.70
60	5000	2900	0.6	0.012	187	6.00	0.030	440	6.00	0.041	660	7.50	0.052	825	8.00	0.100	1650	15.00	0.170	2710	15.70
		1450	0.3	0.006	187	6.00	0.015	440	6.00	0.021	660	7.50	0.026	825	8.00	0.050	1650	15.00	0.084	2710	15.70
		960	0.2	0.004	187	6.00	0.010	440	6.00	0.014	660	7.50	0.017	825	8.00	0.033	1650	15.00	0.056	2710	15.70
		725	0.15	0.003	187	6.00	0.008	440	6.00	0.010	660	7.50	0.013	825	8.00	0.025	1650	15.00	0.042	2710	15.70
61	5600	2900	0.53	0.011	187	6.00	0.027	440	6.00	0.040	660	7.50	0.051	825	8.00	0.100	1650	15.00	0.160	2710	15.70
		1450	0.26	0.005	187	6.00	0.013	440	6.00	0.020	660	7.50	0.026	825	8.00	0.049	1650	15.00	0.082	2710	15.70
		960	0.18	0.004	187	6.00	0.009	440	6.00	0.013	660	7.50	0.017	825	8.00	0.033	1650	15.00	0.054	2710	15.70
		725	0.13	0.003	187	6.00	0.007	440	6.00	0.010	660	7.50	0.013	825	8.00	0.024	1650	15.00	0.041	2710	15.70
62	6300	2900	0.46	0.008	160	6.00	0.023	440	6.00	0.036	660	7.50	0.046	825	8.00	0.087	1650	15.00	0.150	2710	15.70
		1450	0.23	0.004	160	6.00	0.012	440	6.00	0.018	660	7.50	0.023	825	8.00	0.043	1650	15.00	0.075	2710	15.70
		960	0.15	0.003	160	6.00	0.008	440	6.00	0.012	660	7.50	0.015	825	8.00	0.029	1650	15.00	0.050	2710	15.70
		725	0.12	0.002	160	6.00	0.006	440	6.00	0.009	660	7.50	0.011	825	8.00	0.022	1650	15.00	0.037	2710	15.70
63	7100	2900	0.41	0.007	158	6.00	0.021	440	6.00	0.030	605	7.50	0.030	605	8.00	0.064	1360	15.00	0.013	2710	15.70
		1450	0.2	0.004	158	6.00	0.010	440	6.00	0.015	605	7.50	0.015	605	8.00	0.032	1360	15.00	0.065	2710	15.70
		960	0.13	0.002	158	6.00	0.007	440	6.00	0.010	605	7.50	0.010	605	8.00	0.021	1360	15.00	0.043	2710	15.70
		725	0.1	0.002	158	6.00	0.005	440	6.00	0.007	605	7.50	0.007	605	8.00	0.016	1360	15.00	0.032	2710	15.70

Series K Gearboxes : Non-motorised selection

QUINTUPLE REDUCTION RATINGS SIZES 896 - 898

Ratio Code	Nominal Ratio	Input Speed Rev/Min	Output Speed Rev/Min	896			897			898		
				Input Power kW	Output Torque Nm	OHL Fra (kN)	Output Torque Nm	Input Power kW	OHL Fra (kN)	Output Torque Nm	Input Power kW	OHL Fra (kN)
32	160	2900	18.02	8.160	4110	34	13.890	7250	43.1	22.470	12100	61.3
		1450	9.01	4.080	4110	34	6.940	7250	43.1	11.230	12100	61.3
		960	5.97	2.700	4110	34	4.600	7250	43.1	7.440	12100	61.3
		725	4.47	2.030	4110	34	3.450	7250	43.1	5.580	12100	61.3
33	200	2900	12.82	6.070	4300	34	10.030	7250	43.1	14.390	12100	61.3
		1450	6.41	3.040	4300	34	5.010	7250	43.1	7.190	12100	61.3
		960	4.24	2.010	4300	34	3.320	7250	43.1	4.760	12100	61.3
		725	3.18	1.510	4300	34	2.490	7250	43.1	3.570	12100	61.3
34	250	2900	11.44	5.180	4110	34	8.930	7250	43.1	16.220	12100	61.3
		1450	5.72	2.590	4110	34	4.460	7250	43.1	8.110	12100	61.3
		960	3.79	1.710	4110	34	2.960	7250	43.1	5.370	12100	61.3
		725	2.84	1.290	4110	34	2.220	7250	43.1	4.030	12100	61.3
35	280	2900	10.29	4.880	4300	34	8.120	7250	43.1	12.810	12100	61.3
		1450	5.15	2.440	4300	34	4.060	7250	43.1	6.400	12100	61.3
		960	3.41	1.610	4300	34	2.690	7250	43.1	4.240	12100	61.3
		725	2.56	1.210	4300	34	2.020	7250	43.1	3.180	12100	61.3
36	320	2900	9.72	4.610	4300	34	7.310	7250	43.1	11.650	12100	61.3
		1450	4.86	2.300	4300	34	3.650	7250	43.1	5.830	12100	61.3
		960	3.22	1.530	4300	34	2.420	7250	43.1	3.860	12100	61.3
		725	2.41	1.140	4300	34	1.810	7250	43.1	2.890	12100	61.3
37	360	2900	8.75	3.970	4110	34	6.220	7250	43.1	10.050	12100	61.3
		1450	4.38	1.980	4110	34	3.110	7250	43.1	5.030	12100	61.3
		960	2.9	1.310	4110	34	2.060	7250	43.1	3.330	12100	61.3
		725	2.17	0.980	4110	34	1.540	7250	43.1	2.500	12100	61.3
38	400	2900	7.22	3.270	4110	34	5.590	7250	43.1	8.840	12100	61.3
		1450	3.61	1.640	4110	34	2.800	7250	43.1	4.420	12100	61.3
		960	2.39	1.080	4110	34	1.850	7250	43.1	2.930	12100	61.3
		725	1.79	0.810	4110	34	1.390	7250	43.1	2.200	12100	61.3
39	450	2900	6.37	3.020	4300	34	4.920	7250	43.1	7.840	12100	61.3
		1450	3.18	1.510	4300	34	2.460	7250	43.1	3.920	12100	61.3
		960	2.11	1.000	4300	34	1.630	7250	43.1	2.600	12100	61.3
		725	1.58	0.750	4300	34	1.220	7250	43.1	1.950	12100	61.3
40	500	2900	5.93	2.810	4300	34	4.500	7250	43.1	7.280	12100	61.3
		1450	2.97	1.410	4300	34	2.250	7250	43.1	3.640	12100	61.3
		960	1.96	0.930	4300	34	1.490	7250	43.1	2.410	12100	61.3
		725	1.47	0.700	4300	34	1.120	7250	43.1	1.810	12100	61.3
41	560	2900	5.15	2.330	4110	34	4.090	7250	43.1	6.620	12100	61.3
		1450	2.58	1.170	4110	34	2.050	7250	43.1	3.310	12100	61.3
		960	1.71	0.770	4110	34	1.350	7250	43.1	2.190	12100	61.3
		725	1.28	0.580	4110	34	1.020	7250	43.1	1.640	12100	61.3
42	630	2900	4.43	2.010	4110	34	3.560	7250	43.1	5.760	12100	61.3
		1450	2.22	1.000	4110	34	1.780	7250	43.1	2.880	12100	61.3
		960	1.47	0.660	4110	34	1.180	7250	43.1	1.910	12100	61.3
		725	1.1	0.500	4110	34	0.880	7250	43.1	1.430	12100	61.3
43	700	2900	3.99	1.810	4110	34	3.210	7250	43.1	5.110	12100	61.3
		1450	1.99	0.900	4110	34	1.600	7250	43.1	2.560	12100	61.3
		960	1.32	0.600	4110	34	1.060	7250	43.1	1.690	12100	61.3
		725	0.99	0.450	4110	34	0.800	7250	43.1	1.270	12100	61.3
44	800	2900	3.68	1.740	4300	34	2.960	7250	43.1	4.860	12300	61.3
		1450	1.84	0.870	4300	34	1.480	7250	43.1	2.430	12300	61.3
		960	1.22	0.580	4300	34	0.980	7250	43.1	1.610	12300	61.3
		725	0.913	0.430	4300	34	0.730	7250	43.1	1.210	12300	61.3
45	900	2900	3.08	1.460	4300	34	2.560	7250	43.1	4.090	12100	61.3
		1450	1.54	0.730	4300	34	1.280	7250	43.1	2.040	12100	61.3
		960	1.02	0.480	4300	34	0.850	7250	43.1	1.350	12100	61.3
		725	0.766	0.360	4300	34	0.640	7250	43.1	1.010	12100	61.3
46	1000	2900	2.82	1.280	4110	34	2.370	7250	43.1	3.890	12300	61.3
		1450	1.41	0.640	4110	34	1.180	7250	43.1	1.940	12300	61.3
		960	0.934	0.420	4110	34	0.780	7250	43.1	1.290	12300	61.3
		725	0.701	0.320	4110	34	0.590	7250	43.1	0.960	12300	61.3
47	1100	2900	2.6	1.230	4300	34	1.980	7250	43.1	3.450	12300	61.3
		1450	1.3	0.620	4300	34	0.990	7250	43.1	1.720	12300	61.3
		960	0.861	0.410	4300	34	0.660	7250	43.1	1.140	12300	61.3
		725	0.646	0.310	4300	34	0.490	7250	43.1	0.860	12300	61.3
48	1200	2900	2.44	1.160	4300	34	1.830	7250	43.1	3.160	12100	61.3
		1450	1.22	0.580	4300	34	0.910	7250	43.1	1.580	12100	61.3
		960	0.807	0.380	4300	34	0.600	7250	43.1	1.040	12100	61.3
		725	0.605	0.290	4300	34	0.450	7250	43.1	0.780	12100	61.3
49	1400	2900	1.96	0.930	4300	34	1.580	7250	43.1	2.590	12300	61.3
		1450	0.98	0.470	4300	34	0.790	7250	43.1	1.290	12300	61.3
		960	0.65	0.310	4300	34	0.520	7250	43.1	0.860	12300	61.3
		725	0.488	0.230	4300	34	0.390	7250	43.1	0.640	12300	61.3
50	1600	2900	1.77	0.840	4300	34	1.420	7250	43.1	2.300	12300	61.3
		1450	0.884	0.420	4300	34	0.710	7250	43.1	1.150	12300	61.3
		960	0.585	0.280	4300	34	0.470	7250	43.1	0.760	12300	61.3
		725	0.439	0.210	4300	34	0.350	7250	43.1	0.570	12300	61.3

Series K Gearboxes : Non-motorised selection

QUINTUPLE REDUCTION RATINGS SIZES 896 - 898

Ratio Code	Nominal Ratio	Input Speed Rev/Min	Output Speed Rev/Min	896			897			898		
				Input Power kW	Output Torque Nm	OHL Fra (kN)	Output Torque Nm	Input Power kW	OHL Fra (kN)	Output Torque Nm	Input Power kW	OHL Fra (kN)
51	1800	2900	1.67	0.790	4300	34	1.320	7250	43.1	2.170	12300	61.3
		1450	0.833	0.390	4300	34	0.660	7250	43.1	1.090	12300	61.3
		960	0.551	0.260	4300	34	0.440	7250	43.1	0.720	12300	61.3
		725	0.413	0.200	4300	34	0.330	7250	43.1	0.540	12300	61.3
52	2000	2900	1.5	0.710	4300	34	1.190	7250	43.1	1.930	12300	61.3
		1450	0.75	0.360	4300	34	0.590	7250	43.1	0.960	12300	61.3
		960	0.496	0.240	4300	34	0.390	7250	43.1	0.640	12300	61.3
		725	0.372	0.180	4300	34	0.300	7250	43.1	0.480	12300	61.3
53	2200	2900	1.37	0.650	4300	34	1.090	7250	43.1	1.760	12300	61.3
		1450	0.684	0.320	4300	34	0.540	7250	43.1	0.880	12300	61.3
		960	0.453	0.210	4300	34	0.360	7250	43.1	0.580	12300	61.3
		725	0.34	0.160	4300	34	0.270	7250	43.1	0.440	12300	61.3
54	2500	2900	1.12	0.530	4300	34	0.900	7250	43.1	1.470	12300	61.3
		1450	0.559	0.260	4300	34	0.450	7250	43.1	0.730	12300	61.3
		960	0.37	0.180	4300	34	0.300	7250	43.1	0.490	12300	61.3
		725	0.277	0.130	4300	34	0.220	7250	43.1	0.360	12300	61.3
55	2800	2900	1.06	0.500	4300	34	0.830	7250	43.1	1.360	12300	61.3
		1450	0.531	0.250	4300	34	0.420	7250	43.1	0.680	12300	61.3
		960	0.351	0.170	4300	34	0.280	7250	43.1	0.450	12300	61.3
		725	0.263	0.120	4300	34	0.210	7250	43.1	0.340	12300	61.3
56	3200	2900	0.969	0.460	4300	34	0.760	7250	43.1	1.240	12300	61.3
		1450	0.485	0.230	4300	34	0.380	7250	43.1	0.620	12300	61.3
		960	0.321	0.150	4300	34	0.250	7250	43.1	0.410	12300	61.3
		725	0.241	0.110	4300	34	0.190	7250	43.1	0.310	12300	61.3
57	3600	2900	0.791	0.370	4300	34	0.630	7250	43.1	1.040	12300	61.3
		1450	0.395	0.190	4300	34	0.320	7250	43.1	0.520	12300	61.3
		960	0.262	0.120	4300	34	0.210	7250	43.1	0.340	12300	61.3
		725	0.196	0.090	4300	34	0.160	7250	43.1	0.260	12300	61.3
58	4000	2900	0.716	0.340	4300	34	0.550	7250	43.1	0.930	12300	61.3
		1450	0.358	0.170	4300	34	0.280	7250	43.1	0.470	12300	61.3
		960	0.237	0.110	4300	34	0.180	7250	43.1	0.310	12300	61.3
		725	0.178	0.080	4300	34	0.140	7250	43.1	0.230	12300	61.3
59	4500	2900	0.643	0.300	4300	34	0.480	7250	43.1	0.810	12300	61.3
		1450	0.321	0.150	4300	34	0.240	7250	43.1	0.400	12300	61.3
		960	0.213	0.100	4300	34	0.160	7250	43.1	0.270	12300	61.3
		725	0.16	0.076	4300	34	0.120	7250	43.1	0.200	12300	61.3
60	5000	2900	0.573	0.270	4300	34	0.430	7250	43.1	0.760	12100	61.3
		1450	0.287	0.140	4300	34	0.220	7250	43.1	0.380	12100	61.3
		960	0.19	0.090	4300	34	0.140	7250	43.1	0.250	12100	61.3
		725	0.142	0.067	4300	34	0.110	7250	43.1	0.190	12100	61.3
61	5600	2900	0.501	0.230	4110	34	0.400	7250	43.1	0.660	12100	61.3
		1450	0.25	0.110	4110	34	0.200	7250	43.1	0.330	12100	61.3
		960	0.166	0.075	4110	34	0.130	7250	43.1	0.220	12100	61.3
		725	0.124	0.056	4110	34	0.100	7250	43.1	0.160	12100	61.3
62	6300	2900	0.467	0.220	4300	34	0.350	7250	43.1	0.590	12300	61.3
		1450	0.234	0.110	4300	34	0.180	7250	43.1	0.300	12300	61.3
		960	0.155	0.073	4300	34	0.120	7250	43.1	0.200	12300	61.3
		725	0.116	0.055	4300	34	0.088	7250	43.1	0.150	12300	61.3
63	7100	2900	0.415	0.200	4300	34	0.320	7250	43.1	0.560	12300	61.3
		1450	0.208	0.100	4300	34	0.160	7250	43.1	0.280	12300	61.3
		960	0.138	0.065	4300	34	0.110	7250	43.1	0.180	12300	61.3
		725	0.103	0.049	4300	34	0.079	7250	43.1	0.140	12300	61.3

Series K Gearboxes : Non-motorised dimensions

TRIPLE REDUCTION

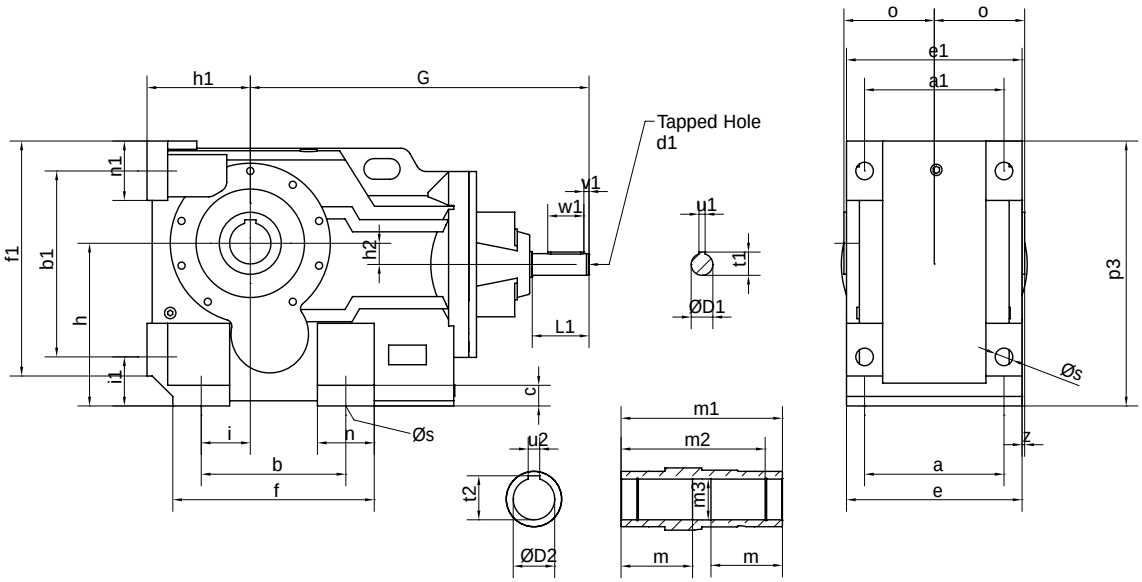

TRIPLE REDUCTION

Unit Size	Base Feet								End Feet							h2	o	p3	Øs	z	Hollow Bore Output Details						
	a	b	e	f	h	n	c	i	a1	b1	e1	f1	h1	n1	i1						ØD2	t2	u2	m	m1	m2	m3
890	100	110	120	143	100	38	11	28	100	115	120	152	63	38	32	16	60	167	11	0	30	33.5	8	52.5	120	105	30.3
891	120	130	145	168	112	38	16	35	120	130	145	171	71	40	37	13	75	187	11	2.5	35	38.5	10	66.0	150	132	35.3
892	130	130	157	170	132	40	15	30	130	150	157	192	80	40	45	5	83	217	14	4.5	40	43.5	12	73.0	166	142	40.3
893	140	120	170	176	140	55	20	30	140	160	170	208	90	48	45	13	90	233	14	5.0	40	43.5	12	80.0	180	156	40.3
894	165	150	200	210	180	60	27	40	165	200	200	263	112	55	55	25	105	288	18	5.0	50	54.0	14	92.5	210	183	50.5
895	180	180	230	256	212	76	30	55	180	233	230	309	132	76	70	15	120	341	23	5.0	60	64.5	18	105.0	240	210	60.5
896	240	240	290	340	265	100	35	75	240	295	290	395	160	100	75	10	150	420	27	5.0	70	75.0	20	132.5	300	270	70.5
897	270	280	340	390	315	110	40	95	270	360	340	455	200	115	95	41	175	513	34	5.0	80	85.5	22	155.0	350	313	80.5
898	330	350	400	470	375	120	45	115	330	420	400	540	225	120	110	65	205	590	39	5.0	100	106.5	28	180.0	410	373	100.5

INPUT SHAFT

Unit Size	Input Shaft Details								
	ØD1	L1	t1	u1	v1	w1	d1	G	kg
890	16 k6	40	18.0	5	4	32	M5 x 0.8 x 12 deep	270	16
891	16 k6	40	18.0	5	4	32	M5 x 0.8 x 12 deep	290	21
892	19 k6	40	21.5	6	4	32	M6 x 1.0 x 16 deep	330	32
893	19 k6	40	21.5	6	4	32	M6 x 1.0 x 16 deep	340	40
894	24 k6	50	27.0	8	5	40	M8 x 1.25 x 19 deep	380	61
895	28 k6	60	31.0	8	5	50	M10 x 1.5 x 22 deep	490	113
896	38 k6	80	41.0	10	5	70	M12 x 1.75 x 28 deep	550	174
897	42 k6	110	45.0	12	10	70	M16 x 2.0 x 36 deep	656	306
898	55 k6	110	59.0	16	10	90	M20 x 2.5 x 42 deep	762	458

* For Motor Dimensions X,Y and Z please refer to motor tables on page 314

FIXING BOLTS**

Unit Size	Bolt Size	Tightening Torque
890	4 x M10 x 25mm long	Tighten to - 50Nm
891	4 x M10 x 30mm long	Tighten to - 50Nm
892	4 x M12 x 35mm long	Tighten to - 85Nm
893	4 x M12 x 40mm long	Tighten to - 85Nm
894	4 x M16 x 50mm long	Tighten to - 200Nm
895	4 x M20 x 60mm long	Tighten to - 350Nm
896	4 x M24 x 70mm long	Tighten to - 610Nm
897	4 x M30 x 80mm long	Tighten to - 1220Nm
898	4 x M36 x 100mm long	Tighten to -2150Nm

** ISO Grade 8.8

Series K Gearboxes : Non-motorised dimensions

QUINTUPLE REDUCTION

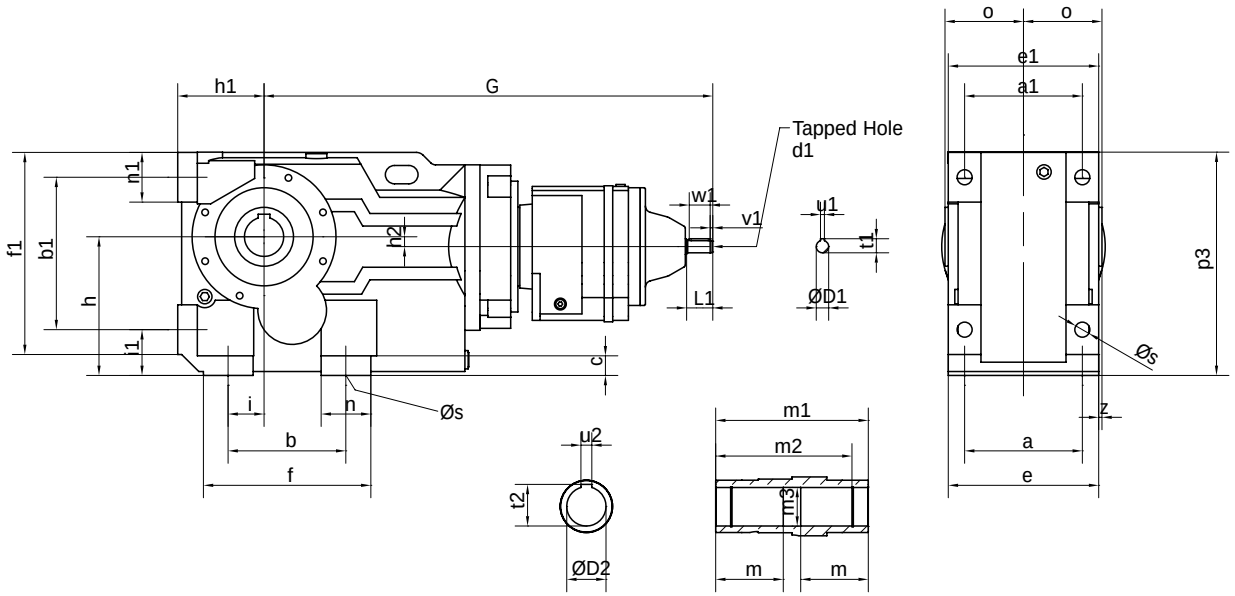

QUINTUPLE REDUCTION

Unit Size	Base Feet								End Feet							h2	o	p3	Øs	z	Hollow Bore Output Details						
	a	b	e	f	h	n	c	i	a1	b1	e1	f1	h1	n1	i1						ØD2	t2	u2	m	m1	m2	m3
890	100	110	120	143	100	38	11	28	100	115	120	152	63	38	32	16	60	167	11	0	30	33.5	8	52.5	120	105	30.3
891	120	130	145	168	112	38	16	35	120	130	145	171	71	40	37	13	75	187	11	2.5	35	38.5	10	66.0	150	132	35.3
892	130	130	157	170	132	40	15	30	130	150	157	192	80	40	45	5	83	217	14	4.5	40	43.5	12	73.0	166	142	40.3
893	140	120	170	176	140	55	20	30	140	160	170	208	90	48	45	13	90	233	14	5.0	40	43.5	12	80.0	180	156	40.3
894	165	150	200	210	180	60	27	40	165	200	200	263	112	55	55	25	105	288	18	5.0	50	54.0	14	92.5	210	183	50.5
895	180	180	230	256	212	76	30	55	180	233	230	309	132	76	70	15	120	341	23	5.0	60	64.5	18	105.0	240	210	60.5
896	240	240	290	340	265	100	35	75	240	295	290	395	160	100	75	10	150	420	27	5.0	70	75.0	20	132.5	300	270	70.5
897	270	280	340	390	315	110	40	95	270	360	340	455	200	115	95	41	175	513	34	5.0	80	85.5	22	155.0	350	313	80.5
898	330	350	400	470	375	120	45	115	330	420	400	540	225	120	110	65	205	590	39	5.0	100	106.5	28	180.0	410	373	100.5

INPUT SHAFT

Unit Size	Input Shaft Details								
	ØD1	L1	t1	u1	v1	w1	d1	G	kg
890	16 k6	40	18.0	5	4	32	M5 x 0.8 x 12 deep	567	24
891	16 k6	40	18.0	5	4	32	M5 x 0.8 x 12 deep	587	29
892	16 k6	40	18.0	5	4	32	M5 x 0.8 x 12 deep	643	43
893	16 k6	40	18.0	5	4	32	M5 x 0.8 x 12 deep	653	51
894	16 k6	40	18.0	5	4	32	M5 x 0.8 x 12 deep	690	70
895	19 k6	40	21.5	6	4	32	M6 x 1.0 x 16 deep	797	139
896	19 k6	40	21.5	6	4	32	M6 x 1.0 x 16 deep	833	197
897	24 k6	50	27.0	8	5	40	M8 x 1.25 x 19 deep	945	321
898	24 k6	50	27.0	8	5	40	M8 x 1.25 x 19 deep	1047	485

FIXING BOLTS**

Unit Size	Bolt Size	Tightening Torque
890	4 x M10 x 25mm long	Tighten to - 50Nm
891	4 x M10 x 30mm long	Tighten to - 50Nm
892	4 x M12 x 35mm long	Tighten to - 85Nm
893	4 x M12 x 40mm long	Tighten to - 85Nm
894	4 x M16 x 50mm long	Tighten to - 200Nm
895	4 x M20 x 60mm long	Tighten to - 350Nm
896	4 x M24 x 70mm long	Tighten to - 610Nm
897	4 x M30 x 80mm long	Tighten to - 1220Nm
898	4 x M36 x 100mm long	Tighten to -2150Nm

Series K Gearboxes : Exact Ratios

EXACT RATIOS

Ratio Code	Nominal Ratio	Nominal Output Speed	Gear Unit Size								
			890	891	892	893	894	895	896	897	898
01	8	173	8.328	8.054	8.112	7.961	8.595	8.128	8.035	8.263	8.513
02	10	143	-	-	-	-	-	-	9.681	9.946	10.256
03	11	125	11.250	11.296	11.405	11.192	11.906	11.522	11.061	11.542	11.799
04	12	112	12.796	12.448	12.783	12.545	13.374	12.800	12.398	12.553	12.96
05	14	101	14.497	14.135	14.349	14.081	14.705	14.238	13.328	13.893	14.214
06	16	94	-	-	-	-	-	-	14.938	15.11	15.613
07	18	78	18.540	17.953	18.222	17.882	19.208	18.410	17.933	18.571	18.203
08	20	70	19.980	20.396	20.657	20.272	21.838	20.668	20.035	20.05	20.166
09	22	65	-	-	-	-	-	-	21.608	22.354	21.93
10	25	57	25.225	25.031	24.636	24.177	26.518	25.345	24.140	24.134	24.294
11	28	50	28.597	27.762	28.367	27.838	29.170	28.560	27.777	29.239	28.995
12	32	44	32.679	31.539	32.993	32.378	33.519	33.244	31.672	33.099	32.831
13	36	40	36.352	35.834	36.913	36.225	38.009	36.877	33.469	35.195	34.931
14	40	36	40.078	39.461	39.343	38.610	41.923	40.357	38.162	39.841	39.553
15	45	31	44.107	45.390	46.627	45.758	48.011	45.657	44.892	45.366	46.81
16	50	28	51.676	49.347	49.784	48.855	54.284	51.537	49.875	50.412	52.764
17	56	26	-	-	-	-	-	-	54.091	54.607	56.394
18	63	23	61.997	59.241	61.777	60.625	62.936	62.475	60.095	60.681	63.567
19	71	20	72.268	71.089	72.848	71.489	75.066	72.857	70.450	71.889	74.616
20	80	18	80.298	80.100	79.767	78.279	82.205	80.031	77.775	82.832	83.103
21	90	16	-	-	-	-	-	-	84.887	86.533	89.893
22	100	15	96.696	93.116	97.757	95.934	98.646	98.077	93.713	99.705	100.119
23	112	13	110.833	105.688	108.958	106.926	113.496	107.100	106.992	112.026	113.789
24	125	12	125.960	120.150	122.196	119.917	126.107	123.327	120.310	120.359	121.064
25	140	11	-	-	-	-	-	-	128.917	134.846	137.087
26	160	10	-	-	-	-	-	-	144.964	144.876	145.852
30	125	12	128	134	118	116	120	132	-	-	-
31	140	11	145	148	143	140	133	145	-	-	-
32	160	10	165	170	157	154	147	164	161	167	172
33	200	6.6	211	200	208	204	211	203	226	226	269
34	250	5.8	227	258	264	259	233	228	254	260	238
35	280	5.0	287	284	300	294	265	268	282	285	302
36	320	4.5	325	322	316	310	305	297	298	317	332
37	360	4.0	371	355	351	344	374	337	331	373	385
38	400	3.5	413	407	399	391	415	401	402	414	437
39	450	3.1	455	448	453	445	466	462	455	471	493
40	500	2.8	516	508	499	489	513	506	489	515	531
41	560	2.5	568	581	574	563	590	538	563	566	584
42	630	2.2	649	646	624	612	641	641	655	651	671
43	700	2.0	704	712	725	712	737	760	727	723	757
44	800	1.8	798	808	812	797	836	811	789	783	809
45	900	1.6	912	891	899	882	924	888	940	904	946
46	1000	1.4	1015	1000	1045	1026	1062	1007	1028	980	1012
47	1100	1.2	1119	1102	1169	1147	1204	1102	1115	1171	1140
48	1200	1.2	1183	1267	1231	1208	1267	1246	1190	1268	1226
49	1400	1.0	1423	1427	1477	1449	1521	1470	1477	1470	1519
50	1600	0.87	1583	1606	1577	1548	1720	1659	1641	1634	1712
51	1800	0.79	1800	1784	1777	1744	1938	1817	1741	1754	1811
52	2000	0.71	2000	2250	1957	1920	1994	2011	1935	1949	2042
53	2200	0.65	2250	2265	2205	2164	2246	2202	2118	2134	2236
54	2500	0.55	2579	2463	2563	2515	2611	2699	2596	2561	2683
55	2800	0.51	2699	2799	2847	2794	2934	2821	2733	2779	2887
56	3200	0.45	3094	3360	3310	3248	3411	3147	2992	3044	3162
57	3600	0.38	3516	3548	3757	3686	3871	3853	3667	3652	3794
58	4000	0.35	4007	3998	4056	3981	4093	4237	4048	4208	4226
59	4500	0.31	4554	4543	4604	4518	4646	4722	4512	4842	4862
60	5000	0.28	4826	4647	5131	5036	5281	5157	5060	5380	5110
61	5600	0.26	5485	5281	5234	5136	5345	5296	5793	5845	5879
62	6300	0.23	6286	5994	5833	5725	6076	5783	6207	6548	6657
63	7100	0.21	7144	6815	6542	6420	6752	6660	6980	7276	7083

Bold print denotes quintuple reduction gearbox.

Series K Gearboxes : Overhung Load Capacities

ALLOWABLE OVERHUNG LOADS

Units are fitted with input and output bearings of ample proportions to cater for the radial and thrust loads imposed by the gears, leaving sufficient capacity for taking additional overhung loads. The calculated overhung load should be compared with the value in the selection tables.

These values may be exceeded at lower input speeds or if limited bearing lives are acceptable. In cases where higher overhung load capacities are necessary consult your distributor, quoting details of power, speed, direction of gearbox rotation, angle of application of load, distance of load application from gearbox and acceptable bearing life.

Permissible overhung loads vary according to the direction of rotation. The values tabulated are for the most unfavourable direction with the unit transmitting full rated power and the load applied midway along the shaft extension. Hence they can sometimes be increased for a more favourable direction of rotation, or if the power transmitted is less than the rated capacity of the gear unit, or if the load is applied nearer to the gear unit case. Refer to your Distributor for further details.

In any event, the sprocket, pulley or gear etc. should be positioned as close as possible to the gear unit case in order to reduce bearing loads and shaft stresses, and to prolong the life of the bearing. All units will accept a 100% momentary overload on stated capacities.

To determine the overhung load when a sprocket, gear or 'V' pulley is fitted to the output shaft, one of the following formulae may be used in the absence of accurate information.

(1) Calculation on the basis of Torque

$$\text{Overhung load (N)} = \frac{M_2 \times 1000 \times K}{r}$$

(2) Calculatio on a basis of Power

$$\text{Overhung load (N)} = \frac{P_2 \times 9550 \times 1000 \times K}{n_2 \times r}$$

Where:

M_2 = Absorbed torque at shaft in Nm.
P_2 = Absorbed power in kW.
r = Pitch radius of sprocket, gear or 'V' pulley in mm.
n_2 = Rev/min of shaft.
K = Application factor -
1.00 for a sprocket
1.25 for a gear or timing pulley
1.50 for a 'V' pulley

Overhung loads may be reduced by one of the following methods:

(1) Increase the diameter of the sprocket, gear or pulley within reasonable limits.

(2) Mount the sprocket, gear or pulley on a separate shaft, supported on its own bearings and couple it to the gear unit output shaft by means of a Fenner shaft coupling.

(3) Use a special extended output shaft and support the free end with an outrigger bearing.

Axial Thrust Capacities (N)

No check or calculation is required for axial loads towards or away from the unit up to 50% of the permissible overhung load. If the axial thrust exceeds these values or if there is a combination of axial thrust loads and overhung loads please refer to your local Authorised Distributor.

DISTANCE MIDWAY ALONG SHAFT EXTENSION

Unit Size	No. of Reductions	Dimension A (mm)	Dimension B (mm)
890	3	23.5	20
	5	23.5	20
891	3	28	20
	5	28	20
892	3	33	20
	5	33	20
893	3	38	20
	5	38	20
894	3	47.5	25
	5	47.5	20
895	3	50	30
	5	50	20
896	3	55	40
	5	55	20
897	3	70	55
	5	70	25
898	3	90	55
	5	90	25

ALLOWABLE INPUT SHAFT OVERHUNG LOADS Frb (KN) @1450 Rev/Min.

Unit Size	2 Stage	3 Stage
890	1.5	1.5
891	1.5	1.5
892	1.25	1.5
893	1.05	1.5
894	2.1	1.5
895	3.1	1.5
896	3.5	1.5
897	4.5	1.8
898	12	1.8

*For Output Shaft Overhung Load Capacities see the relevant selection tables

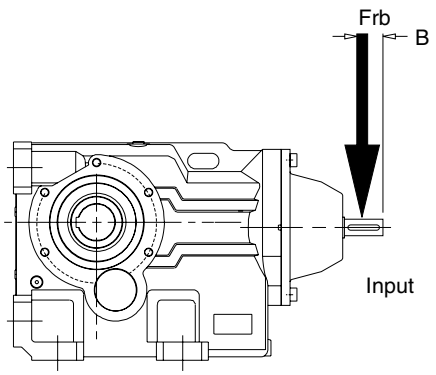

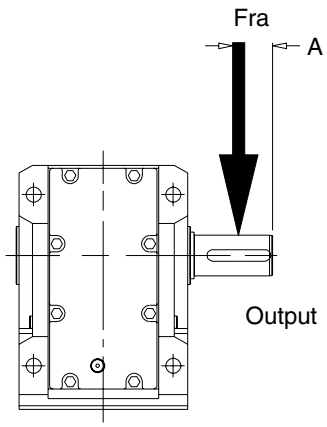

Series K Gearboxes : Accessories

TORQUE ARM

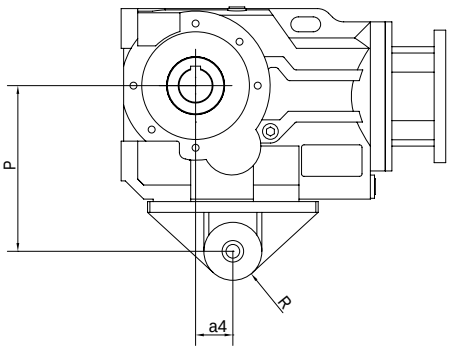

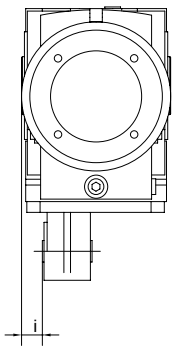

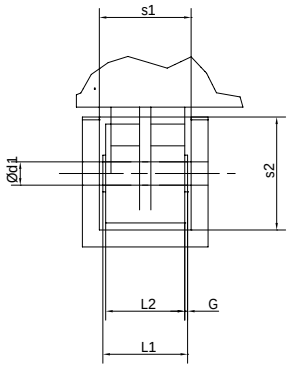

Unit Size	P	a4	d1	R	i	l1	l2	G	s1	s2	kg	Part Number
890	140	23.5	10.5/10.3	20	20	36	32	2	41	50	1.0	890A9600
891	160	30.0	10.5/10.3	20	20	36	32	2	41	50	2.0	891A9600
892	192	40.0	16.5/16.3	35	18	60	56	2	65	80	3.8	892A9600
893	200	45.0	16.5/16.3	35	25	60	56	2	65	80	4.1	893A9600
894	250	52.5	16.5/16.3	35	25	60	56	2	65	80	6.3	894A9600
895	300	60.0	25.25/24.75	40	30	80	70	5	85	95	14.0	895A9600
896	350	70.0	25.25/24.75	40	40	100	90	5	105	95	18.0	896A9600
897	450	74.0	25.25/24.75	40	45	100	90	5	105	95	27.0	897A9600
898	550	60.0	38.25/37.75	58	10	126	110	8	131	130	32.0	898A9600

SINGLE OUTPUT SHAFT

Unit Size	ØD2	L2	t2	u2	v2	w2	i	o	d1	kg	Part Number
890	25	47	28.0	8	3	40	60.0	110	M10x1.5 x 22	0.7	890A9700
891	30	56	33.0	8	3	50	75.0	135	M12x1.75x28	1.1	891A9700
892	35	66	38.0	10	3	56	88.0	153	M16x2.0 x 38	1.3	892A9700
893	40	76	43.0	12	3	70	101.0	171	M16x2.0 x 38	1..8	893A9700
894	50	95	53.5	14	3	80	123.5	206	M16x2.0 x 38	3.5	894A9700
895	60	114	64.0	18	3	100	150.0	240	M20x2.5 x 42	6.1	895A9700
896	70	135	74.5	20	3	110	171.0	291	M20x2.5 x 42	10.8	896A9700
897	90	172	95.0	25	5	140	212.0	347	M20x2.5 x 42	18.5	897A9700
898	110	213	116.0	28	5	180	253.0	418	M24x3.0 x 55	34.6	898A9700

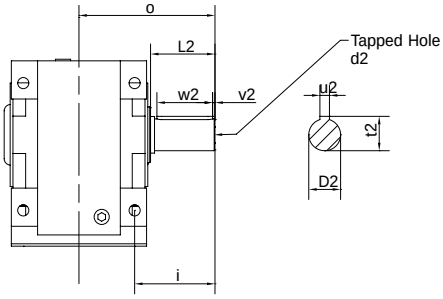

DOUBLE OUTPUT SHAFT

Unit Size	ØD2	L2	t2	u2	v2	w2	i	o	d1	kg	Part Number
890	25	47	28.0	8	3	40	60.0	110	M10x1.5 x 22	1.0	890A9800
891	30	56	33.0	8	3	50	75.0	135	M12x1.75x28	1.7	891A9800
892	35	66	38.0	10	3	56	88.0	153	M16x2.0 x 38	2.5	892A9800
893	40	76	43.0	12	3	70	101.0	171	M16x2.0 x 38	3.1	893A9800
894	50	95	53.5	14	3	80	123.5	206	M16x2.0 x 38	5.9	894A9800
895	60	114	64.0	18	3	100	150.0	240	M20x2.5 x 42	9.0	895A9800
896	70	135	74.5	20	3	110	171.0	291	M20x2.5 x 42	18.0	896A9800
897	75	163	79.5	20	5	110	203.0	347	M20x2.5 x 42	25.0	897A9800
898	95	200	100.0	25	5	140	240.0	418	M20x2.5 x 42	50.0	898A9800

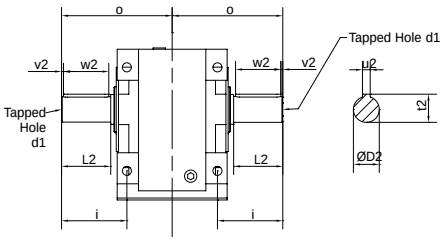

Series K Gearboxes : Accessories

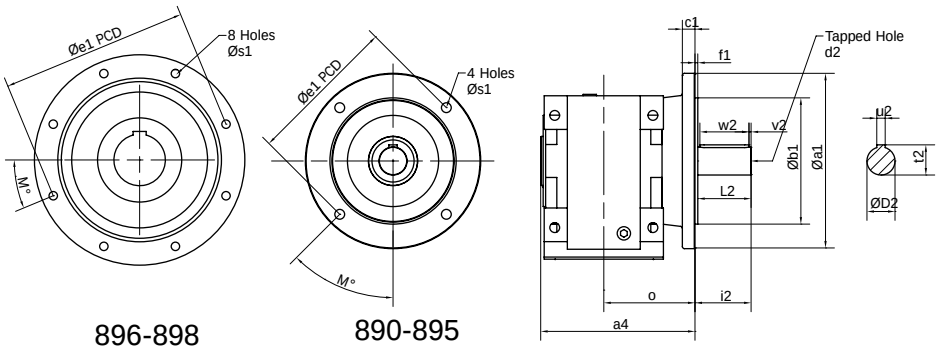

896-898

890-895

OUTPUT FLANGE

Unit Size	Øa1	b1	e1	f1	c1	o	a4	M°	s1	kg	Part Number
890	160	110 j6	130	3.5	10	84	144	45°	4 holes Ø9	1.3	871A9900
891	200	130 j6	165	3.5	12	115	190	45°	4 holes Ø11	2.8	872A9900
892	250	180 j6	215	4.0	16	106	189	45°	4 holes Ø14	4.0	892A9300
893	250	180 j6	215	4.0	18	130	220	45°	4 holes Ø14	5.4	893A9300
894	250*	180 j6	215	4.0	18	142	247	45°	4 holes Ø14	5.4	893A9300
	300	230 j6	265	4.0	18	142	247	45°	4 holes Ø14	7.0	894A9300
895	350	250 h6	300	5.0	18	165	285	45°	4 holes Ø18	15.0	875A9900
896	450	350 h6	400	5.0	20	201	351	22.5°	8 holes Ø18	17.0	876A9900
897	450	350 h6	400	5.0	22	405	410	22.5°	8 holes Ø18	26.0	877A9900
898	450	350 h6	400	5.0	22	478	473	22.5°	8 holes Ø18	26.0	877A9900

EXTENDED OUTPUT SHAFT DIMENSIONS

Unit Size	ØD2	L2	v2	w2	i2	t2	u2	d2	kg	Part Number
890	25 k6	50	3.0	40	50	28.0	8	M10 x 1.5 x 22 deep	0.8	890A9900
891	30 k6	60	3.0	50	60	33.0	8	M12 x 1.75 x 28 deep	1.3	891A9900
892	35 k6	70	3.0	60	70	38.0	10	M16 x 2.0 x 36 deep	1.8	892A9900
893	40 k6	80	3.0	700	80	43.0	12	M16 x 2.0 x 36 deep	2.1	893A9900
894	50 k6	100	3.0	80	100	53.5	14	M16 x 2.0 x 36 deep	4.4	894A9900
895	60 m6	120	3.0	100	120	64.0	18	M20 x 2.5 x 42 deep	6.0	895A9900
896	70 m6	140	3.0	110	140	74.5	20	M20 x 2.5 x 42 deep	13.0	896A9900
897	90 m6	170	5.0	140	170	95.0	25	M20 x 2.5 x 42 deep	22.5	897A9900
898	110 m6	210	5.0	180	210	116.0	28	M24 x 3.0 x 55 deep	41.5	898A9900

Series K Gearboxes : Accessories

B14 FLANGE DIMENSIONS

Unit Size	Øe5	F7	o2	Q	Ør h7 Spigot Ø	ØR H7	Spigot f	Recess F
890	107 pcd	6 Holes M8 x 1.25, 12 Deep	55	122	85	-	2.5	-
891	130 pcd	6 Holes M8 x 1.25, 12 Deep	70	146	105	-	2.5	-
892	125 pcd	6 Holes M10 x 1.5, 17 Deep	75	150	105	-	3.0	-
893	150 pcd	6 Holes M10 x 1.5, 17 Deep	83	180	130	-	3.5	-
894	150 pcd	8 Holes M10 x 1.5, 17 Deep	95	180	130	-	6.0	-
895	195 pcd	6 Holes M12 x 1.75, 20 Deep	115	220	-	150	-	5.0
896	230 pcd	5 Holes M16 x 2.0, 27 Deep	145	260	-	180	-	6.0
897	280 pcd	8 Holes M16 x 2.0, 27 Deep	170	310	-	210	-	7.0
898	280 pcd	9 Holes M16 x 2.0, 27 Deep	200	310	-	210	-	7.0

890, 891 & 895

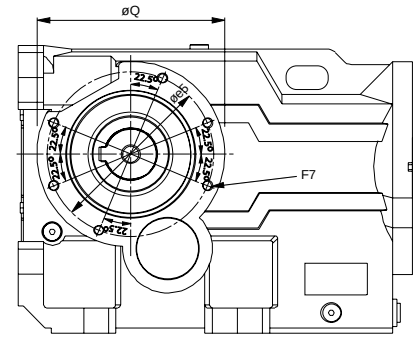

892

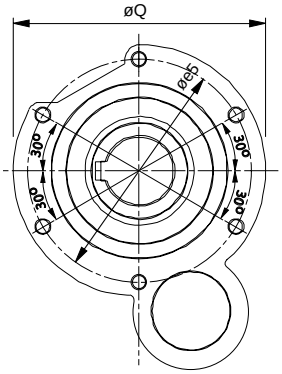

893

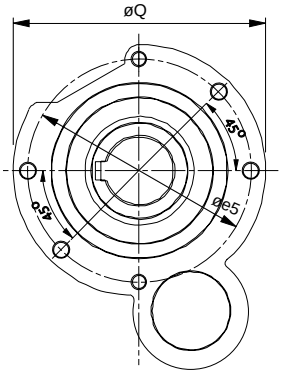

894

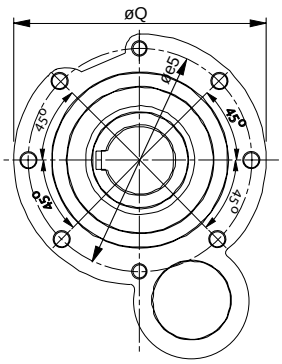

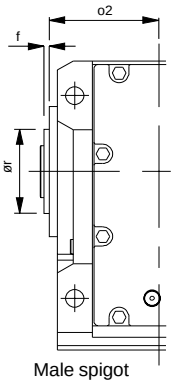

Male spigot
890 - 894

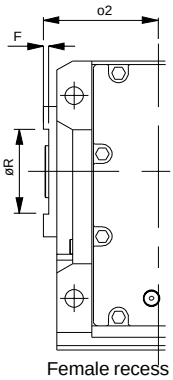

Female recess
895 - 898

896

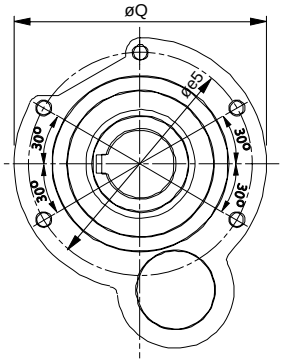

897

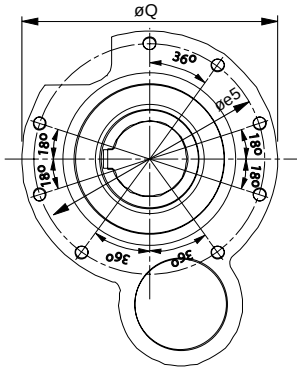

898

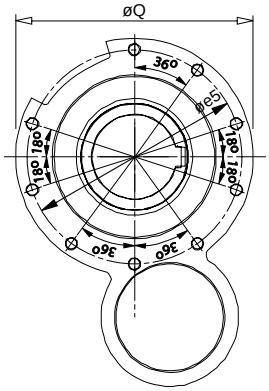

PROTECTIVE COVER

Unit Size	Øg4	w7	kg	Part Number
890	89	91	0.2	890A9400
891	108	113	0.3	891A9400
892	108	118	0.3	891A9400
893	133	140	0.4	893A9400
894	133	152	0.4	893A9400
895	162	175	1.0	895A9400
896	192	210	1.3	896A9400
897	242	265	2.0	897A9400
898	242	295	2.0	898A9400

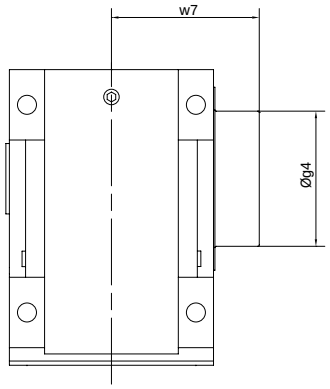

Series K Gearboxes : Installation and Maintenance

Satisfactory performance depends on proper installation, lubrication and maintenance. All instructions given in the installation leaflet must be followed carefully.

SHAFT MOUNTING

Ensure that the shaft on to which the gear unit is to be mounted and the gear unit bore are clean and free from burrs.

Liberally smear the shaft and bore with a suitable lubricant to aid assembly and prevent fretting corrosion. Slide the unit on to the driven shaft. Fit side fitting key. DO NOT USE TAPER OR TOP FITTING KEY.

FOOT MOUNTING

Mount the unit securely to a rigid structure. Fit the output extension shaft as required. Use flexible couplings such as Fenaflex for shaft to shaft connections and ensure that shaft misalignment is within the coupling's capacity. When a pulley or sprocket is fitted to either shaft, mount it as close as possible to the gearcase.

When fitting or removing drive components do not hammer on shaft as this will damage the bearings, Fenner Taper Lock bushes permit easy fixing and dismantling without undue force.

LUBRICATION

Sizes 890 to 893 will be supplied with a quantity of EP mineral oil (VG320 grade) for mounting position B3. Other mountings must be specified on order. However if, the unit is supplied without lubricant then the oil quantity can be obtained from Tables 1 & 2 on page 310. Sizes 894 to 898 are supplied without oil. Before running they should be filled with an appropriate amount of the correct lubricant shown in tables 1 & 2 page 310, dependent on the mounting position, see below.

WARNING Do not overfill as excess lubricant may cause overheating and leakage.

OIL CHANGES

Sizes 890, 891 and 892 are lubricated for life except when the units are required to work in an explosive atmosphere. (94/9/EC Atex 100a Group II category 2 zones 1 &21 & category 3 zones 2 & 22). See separate leaflet for recommendations. All other sizes will require an oil change depending on the unit operating temperature. Initial fill of oil should be changed in a new gear unit after 1000 hours operation or one year or half the life in the table below whichever is the soonest.

Operating Temp °C	Renewal Period (Hours)	
	Mineral Oil	Synthetic Oil
75 or less	17000 or 3 yrs	26000 or 3 yrs
80	12000 or 3 yrs	26000 or 3 yrs
85	8500 or 3 yrs	21000 or 3 yrs
90	6000 or 2 yrs	15000 or 3 yrs
95	4200 or 17 mths	10500 or 3 yrs
100	3000 or 12 mths	7500 or 2.5 yrs
105	2100 or 8 mths	6200 or 2 yrs
110	1500 or 6 mths	2100 or 18 mths

TEMPERATURE LIMITATIONS

The standard lubricant is suitable for operation in ambient temperatures of 0 to 35°C, outside of this consult your local Authorised Distributor.

BREATHERS/MOUNTING POSITIONS

Sizes 890, 891 & 892 are supplied for operation without breathers.

Size 893 is supplied for operation with a breather but to prevent leakage during transit this unit is fitted with blanking plugs. It is essential that when the unit is in its operating position the relevant blanking plug is removed and replaced by the breather plug (supplied) in the position indicated on the installation leaflet.

Sizes 894 to 898 are supplied for operation with a breather but are despatched without oil.

It is essential that when the unit is in its operating position the relevant blanking plug is removed and replaced by the breather plug (supplied) in the position indicated on the installation leaflet.

STARTING UP

Prior to starting up the following procedure should be followed:

1: Ensure Ventilator is fitted (size 893 and above)
2: Check Oil level (893 and above) top up if necessary
3: Ensure all safety devices are in place (i.e. guards fitted)
4: Remove any devices fitted to prevent machine rotation

Starting up should be performed or supervised by suitably qualified personnel.

MOUNTING POSITIONS

Ceiling Mounted (B8)

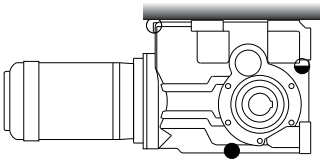

Right Hand Wall Mounting (B7)†

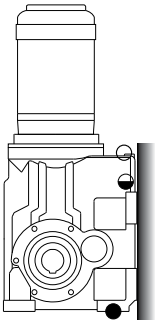

Left Hand Wall Mounting (B6)†*

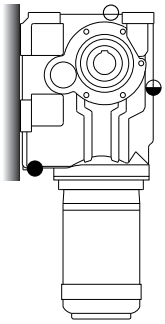

Flange Mounting Shaft Up (V3)

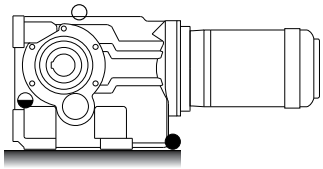

Vertical Mounting Shaft Up (V6)
Standard Floor Mounting (B3)

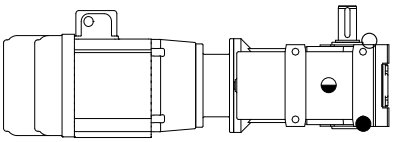

Wall Mounting Shaft Down (V5)
Shaft Down Flange Mounting (V1)

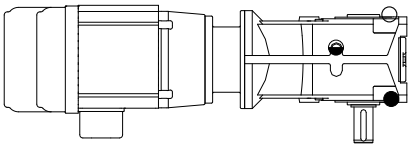

†Gear units for use in mounting positions B6 & B7 should only be selected with overall ratios greater than or equal to those shown in the table below.

* Mounting position B6 is not recommended for geared motors. Consult your local authorised distributor.

Unit Size	Input Speed (rpm)			
	1000	1500	1800	>1800
890-895	All	All	All	Consult you local distributor
896	All	11:1	14:1	
897	11:1	20:1	25:1	
898	16:1	32:1	36:1	

Plug positions apply for sizes 893 and larger.

○ Ventilator/Filling Position
◒ Level Position
● Drain Position

Series K Gearboxes : Installation and Maintenance

LUBRICATION QUANTITY (LITRES)

Lubricant quantities are intended as a guide only.
Fill gearbox until oil escapes from level plug.

TABLE 1: TRIPLE REDUCTION

Unit Size	Mounting Position					
	B3	V6/V3	V5/V1	B8	B7	B6
890	0.5	0.8	0.7	1.0	1.2	0.9
891	0.7	1.1	0.9	1.3	1.7	1.2
892	1.1	1.7	1.5	1.9	2.5	2.0
893	1.5	2.8	1.8	2.7	3.6	2.6
894	2.7	4.0	3.6	4.5	5.7	4.5
895	4.4	7.6	3.7	7.5	9.6	7.6
896	9.3	18.0	8.3	17.0	21.0	16.0
897	15.0	28.0	15.0	30.0	34.0	25.0
898	23.0	33.0	27.0	39.0	50.0	35.0

TABLE 2: LUBRICATION QUANTITY (LITRES) QUINTUPLE REDUCTION

ISO Viscosity	Mounting Position											
	B3		V5/V1		V6/V3		B8		B7		B6	
	Primary	Secondary	Primary	Secondary	Primary	Secondary	Primary	Secondary	Primary	Secondary	Primary	Secondary
890	0.5	0.5	0.5	0.8	0.5	0.7	0.5	1.0	0.7	1.2	1.0	0.9
891	0.5	0.7	0.5	1.1	0.5	0.9	0.5	1.3	0.7	1.7	1.0	1.2
892	0.8	1.1	0.8	1.7	0.8	1.5	0.8	1.9	1.1	2.5	1.4	2.0
893	0.8	1.5	0.8	2.8	0.8	1.8	0.8	2.7	1.1	3.6	1.4	2.6
894	0.8	2.7	0.8	2.7	0.8	2.7	0.8	2.7	1.1	5.7	1.4	4.5
895	1.5	4.4	1.5	7.6	1.5	3.7	1.5	7.5	2.0	9.6	2.6	7.6
896	1.5	9.3	1.5	18	1.5	8.3	1.5	17.0	2.0	21.0	2.6	16.0
897	2.6	15.0	2.6	28	2.6	15	2.6	30.0	3.2	34.0	4.7	25.0
898	2.6	23.0	2.6	33	2.6	27	2.6	39.0	3.2	50.0	4.7	35.0

LUBRICANT TYPE

ISO Viscosity	Ambient Temperature °C			
	-30°C to 20°C	-5°C to 20°C	0°C to 35°C	20°C to 50°C
EP Mineral Oil	-	220	320	460
Synthetic Oil 1	220	-	220	320
Synthetic Oil 2	220	-	320	460

Synthetic Oil 1 = Polyalphaolefin based.
Synthetic Oil 2 = Polyglycol based

RECOMMENDED OIL GRADES

Supplier	Mineral Oils Containing EP Additives	Synthetic Lubricants Polyglycol Based	Synthetic Lubricants Polyalphaolefin based
BP	Energol GR-XP or XF	Enersyn SG-XP	Enersyn EPX
Castrol	Alpha Max or SP	Alphasyn PG	Alphasyn EP or T
Esso	Spartan EP	Glycolube	Spartan Synthetic EP
Fuchs	Renogear V or WE	Renolin PG	Renogear SG
Mobil	Mobilgear 600	Glygoyle	Mobilgear SHC
Shell	Omala or Omala F	Tivela or Tivela S	Omala HD
Texaco	Meropa or Meropa WM	Synlube CLP	Pinnacle EP
Total	Carter EP	Carter SY	Carter EP/HT
Rocol	Sapphire Hi-Torque	-	-

Series K Gearboxes : Ordering Instructions

All Fenner Series K geared motors are identified by a product code number; this can consist of an eight or nine digit number depending on the type of motor fitted or the style of unit.

The basic 8 digit code giving the unit type, size, ratio and motor power should be taken from the selection tables. A breakdown of the coding system for the basic unit and the other options is given below. If a special motor is required a ninth digit is usually added to the end of the normal 8 digit code, see the table below.

These codes should be included on all enquiries, correspondence and orders.

First Two digits: Product prefix
Constant for Series K = 89

Third digit: Unit size 0–8

Fourth digit: Mounting Type:

A: Motorised with Standard Hollow Bore
D: Input Reducer Assembly with Standard Hollow Bore
G: Standard Hollow Bore unmotorised (ready to fit motor)

Fifth/Sixth digit: Gear Ratio Code (for exact ratio see page 304).

Seventh/Eighth digit: Type of drive code

1. Motorised units - use complete code from selection tables with if applicable, additional ninth digit for motor type.
2. Input Reducer assembly - use 00.
3. Unmotorised units ready for a motor fitting by a third party - use the three digit code as shown in the table below:

Code	Frame	Flange
63C	63	B14
63D	63	B5
71C	71	B14
71D	71	B5
80C	80	B14
80D	80	B5
90C	90	B14
90D	90	B5
10C	100	B14
10D	100	B5
11C	112	B14
11D	112	B5
13C	132	B14
13D	132	B5
16D	160	B5
18D	180	B5
20D	200	B5
22D	225	B5
25D	250	B5

Use eight digit code obtained from selection tables for required motor power and speed and then add the relevant letter code from table below of the motor variant required.

Code	Additional Feature
A	Anti-condensation heaters fitted
B	Backstop Fitted
E	Fitted with encoder
M	Brake motor
N	Brake motor with Hand Release
Q	Refer to Original Quote - Special
S	Single Phase motor
T	Fitted with Thermistors
X	Fitted with Variator
Z	Fitted with Force Vent unit

SUFFIX CODES

Code	Additional Feature
/TA	with torque arm
/SOS	with single output shaft
/DOS	with double output shaft
/FL	Output flange (hollow)
/FLS	Output flange and extended shaft
/PC	Protective Cover

Fenner Geared Motors: Backstop Module

To compliment the Fenner Series, M, C, F & K range of gearboxes a range of backstops suitable for all sizes and types.

MOTORISED BACKSTOP MODULE

Motorised backstop modules can be fitted between the gear unit and motor of all the gearbox types shown in this catalogue.The backstop device incorporates high quality centrifugal lift off sprag which does not wear until the lift off speed (n min) is reached.

To ensure correct operation motor speed must exceed lift off speed. Suitable for ambient temperature - 40°C + 50°C

When a backstop module is fitted dimension K1 should be added to the overall length of the geared motor assembly.

Rotation of output shaft must be specified when ordering as viewed from the output shaft end (as shown in the diagram below). Please request a 'Direction of Rotation' form at point of order.

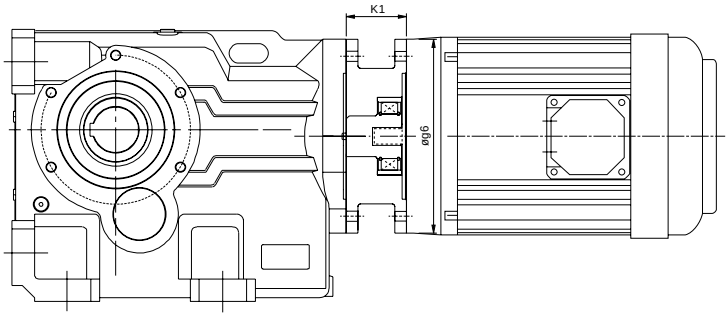

Motor Frame Size	Lift off speed (n min) (rev/min)	Rated Locking torque (T max) at motor (Nm)	og6	K1	kg
100	670	170	250	70	15
112	670	170	250	70	15
132	620	940	300	95	22
160	620	940	350	130	56
180	620	940	350	130	38
200	550	1260	400	130	46

WARNING: Removal of motor or backstop will release the drive.
Ensure all driven machinery is secure prior to any maintenance work.

Fenner Geared Motors: Reducer Backstop Module

REDUCER BACKSTOP MODULE

The reducer units listed below can be fitted with an internal backstop, this has no effect on the external unit size. The backstop device incorporates high quality centrifugal lift off sprags which are wear free above the lift off speed (n min). To ensure correct operation input speed must exceed lift off speed.

Suitable for ambient temperature -40°C to + 50°C

Rotation of output shaft must be advised at point of ordering. Please request additional information from your local authorised distributor.

SERIES M

Gear Unit Size	Lift off Speed ('n' min) (at inputshaft) (rev/min)	Rated Locking Torque ('T Max) (at inputshaft) (Nm)
802	800	100
862	800	100
803	800	100
863	670	170
863	800	100
864	670	300
864	670	170
865	620	940
865	670	300
866	550	1260
866	670	300
867	550	2400
867	550	2400
868	550	2400
868	550	2400

Bold typeface indicates triple reduction ratios

SERIES C

Gear Unit Size	Lift off Speed ('n' min) (at nputshaft) (rev/min)	Rated Locking Torque ('T Max) (at inputshaft) (Nm)
873	800	100
874	670	170
875	670	300
876	620	940
877	550	1260

SERIES F

Gear Unit Size	Lift off Speed ('n' min) (at inputshaft) (rev/min)	Rated Locking Torque ('T Max) (at inputshaft) (Nm)
882	670	170
883	670	300
883	670	170
884	620	940
884	670	300
885	550	1260
885	670	300

Bold typeface indicates triple reduction ratios

SERIES K

Gear Unit Size	Lift off Speed ('n' min) (at inputshaft) (rev/min)	Rated Locking Torque ('T Max) (at inputshaft) (Nm)
892	800	100
893	800	100
894	670	170
895	670	170
896	670	300
897	670	300
898	550	2400

Fenner Geared Drives: Electric Motors

Standard Motor Specification
Motors used on all Fenner gearboxes conform in performance to BS5000 and IEC34-1 and in dimensions to BS4999 and IEC72-1/2

Motors are of a squirrel cage type and TEFC (Totally Enclosed Fan Cooled) design.

Motors are protected to IP55 as standard and are designed to operate with a Class B temperature rise with Class F Insulation at 40°C ambient.

*Motor Code relates to the last 2 digits of the unit reference in the selection tables

** Dimensios shown apply to the standard motor normally supplied by Fenner. Consult your local Authorised Fenner Distributor for details of other motors.

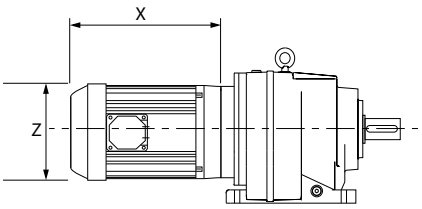

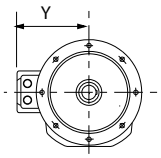

Code	Motor Type
A	Anti-condensation Heaters Fitted (please specify 110V or 220V on order)
E56	IP56 Enclosure - Washdown Duty (see page 316)
E65	IP65 Enclosure - Very Dusty Environments (see page 316)
M	Fitted with standard Failsafe Brake - DC rectified (see page 174)
N	Fitted with standard Failsafe Brake (DC rectified) and Manual Hand release lever
T	Fitted with PTC Thermistors
Z	Fitted with Force Vent Blower (see page 175

OTHER OPTIONS

All Geared motor units can be supplied with a number of additional options. When ordering, please use the letter code given as a suffix at the end of the 8 digit code from the selection tables.

Code	Motor Type
B	Fitted with Integrated Modular Backstop between gearbox and motor (see page 312)
L	Fitted with Modular Clutch/Brake assembly between gearbox and motor (see page 176)
X	Fitted with Disc variator between gearbox and motor (see page 177-178)
S	Fitted with single phase motor (please consult FPT)
Q	Special production - Refer to serial number records (please consult FPT)
T	Fitted with PTC Thermistors

ORDERING INSTRUCTIONS

When ordering a Geared Motor with an IE3 motor fitted, please add the suffix "/IE3" to the 8 or 9 digit code from the selection tables. Motor options listed above are available for both IE2 and IE3 motors - please use the suffix shown before the "/IE3" addition.

IE2 PREMIUM EFFICIENCY 2 POLE - 3000RPM

Motor Code *	Frame	Output Power		Speed rpm	FL Amps 400V	FL Torque Nm	Motor Efficiency (%)			Dimensions **			Mass kg
		kW	HP				1/2 Load	3/4 Load	Full Load	X	Y	Z	
47	63	0.12	0.16	2790	0.38	0.4	53.0	60.0	61.0	193	122	125	5.7
01	63	0.18	0.25	2770	0.53	0.6	56.0	62.0	63.0	193	122	125	6.2
03	63	0.25	0.33	2760	0.71	0.9	58.0	64.0	65.0	193	122	125	6.7
09	71	0.37	0.50	2800	0.88	1.3	68.0	71.0	71.0	218	130	141	6.5
10	71	0.55	0.75	2780	1.25	1.9	70.0	72.0	72.0	218	130	141	8.5
19	80	0.75	1.0	2790	1.63	2.6	77.0	78.0	78.0	236	139	159	12.5
20	80	1.1	1.5	2790	2.32	3.8	79.5	80.5	80.5	236	139	159	14.0
26	90S	1.5	2.0	2825	3.14	5.1	81.5	82.0	82.0	254	157	179	17.5
29	90L	2.2	3.0	2840	4.58	7.4	83.0	83.6	83.6	279	157	179	21.0
39	100L	3.0	4.0	2880	5.92	10.0	84.0	85.0	85.0	316	167	199	28.5
44	112M	4.0	5.5	2870	7.72	13.3	86.0	86.0	86.0	333	192	222	38.0
52	132S	5.5	7.5	2910	10.6	18.1	86.5	88.0	88.0	372	218	271	60.0
58	132S	7.5	10.0	2910	14.1	24.6	88.0	88.5	88.5	372	218	271	63.0
63	160M	11.0	15.0	2935	20.4	35.8	90.0	90.6	90.5	488	264	329	104.0
64	160M	15.0	20.0	2930	27.6	48.9	91.0	91.3	91.3	488	264	329	112.0
69	160L	18.50	25.0	2940	33.7	60.1	91.3	92.0	92.0	532	264	329	124.0
77	180M	22.00	30.0	2945	39.1	71.4	92.0	92.4	92.2	554	279	360	164.0

IE2 PREMIUM EFFICIENCY 4 POLE - 1500RPM

Motor Code *	Frame	Output Power		Speed rpm	FL Amps 400V	FL Torque Nm	Motor Efficiency (%)			Dimensions **			Mass kg
		kW	HP				1/2 Load	3/4 Load	Full Load	X	Y	Z	
48	63	0.12	0.16	1380	0.38	0.83	55.0	58.0	59.0	193	122	125	5.7
02	63	0.18	0.25	1380	0.55	1.25	59.0	61.0	61.0	193	122	125	7.2
06	71	0.25	0.33	1360	0.72	1.76	63.0	66.0	66.0	218	130	141	7.0
08	71	0.37	0.50	1365	1.08	2.59	65.0	68.0	68.0	218	130	141	8.0
16	80	0.55	0.75	1410	1.27	3.73	75.0	76.5	76.5	236	139	159	10.5
18	80	0.75	1.00	1410	1.63	5.08	79.0	79.6	79.8	236	139	159	13.5
24	90S	1.10	1.50	1440	2.40	7.30	81.0	81.8	81.8	254	157	179	19.0
28	90L	1.50	2.00	1440	3.26	9.95	81.5	83.0	83.0	279	157	179	22.0
36	100L	2.20	3.00	1425	4.64	14.8	84.0	84.5	84.5	316	167	199	30.5
38	100L	3.0	4.00	1420	6.17	20.2	85.0	85.6	85.6	316	167	199	33.0
46	112M	4.0	5.50	1440	8.12	26.5	86.0	86.7	86.7	333	192	222	42.0
54	132S	5.50	7.50	1460	10.5	36.0	88.0	88.1	88.1	372	218	271	63.0
56	132M	7.50	10.0	1455	14.1	49.3	88.7	89.0	89.0	410	218	271	72.0
66	160M	11.0	15.0	1470	21.2	71.5	89.0	90.2	90.2	488	264	329	105
68	160L	15.0	20.0	1465	28.7	97.8	90.6	91.0	91.0	532	264	329	125
76	180M	18.50	25.0	1465	35.1	121	91.5	91.8	91.6	554	279	360	164
78	180L	22.0	30.0	1465	40.5	143	92.2	92.5	92.3	592	279	360	186
88	200L	30.0	40.0	1470	56.2	195	92.6	93.0	92.8	657	317	402	222
94	225S/M	37.0	50.0	1475	66.6	240	93.0	93.2	93.2	746	384	455	342
95	225S/M	45.0	60.0	1475	80.7	292	93.2	93.7	93.6	746	384	455	363
96	250S/M	55.0	75.0	1475	97.1	356	93.6	93.9	94.0	825	402	486	444
98	280S/M	75.0	100.0	1485	133	483	93.8	94.4	94.4	931	472	599	639
99	280S/M	90.0	120.0	1485	158	579	94.1	94.7	94.7	931	472	599	673

IE2 PREMIUM EFFICIENCY 6 POLE - 1000RPM

Motor Code *	Frame	Output Power		Speed rpm	FL Amps 400V	FL Torque Nm	Motor Efficiency (%)			Dimensions **			Mass kg
		kW	HP				1/2 Load	3/4 Load	Full Load	X	Y	Z	
13	63	0.12	0.16	905	0.529	1.27	42.0	50.0	52.0	193	122	125	7.2
05	71	0.18	0.25	890	0.722	1.93	52.0	58.0	59.0	218	130	141	9.5
07	71	0.25	0.33	900	1.02	2.65	53.0	60.0	61.0	218	130	141	11.5
12	80	0.37	0.50	910	1.05	3.88	63.0	67.0	67.0	236	139	159	10.5
17	80	0.55	0.75	910	1.49	5.77	65.0	71.0	71.0	236	139	159	14
23	90S	0.75	1.00	925	1.95	7.75	74.5	76.0	76.0	254	157	179	19
27	90L	1.1	1.50	925	2.78	11.4	76.0	78.1	78.1	279	157	179	23
37	100L	1.5	2.00	940	3.71	15.3	79.5	80.0	80.0	316	167	199	28.5
45	112M	2.2	3.00	940	5.3	22.4	81.0	82.5	82.0	333	192	222	38
53	132S	3.0	4.00	960	7.3	29.9	82.5	83.6	83.6	372	218	271	61
55	132M	4.0	5.50	960	9.46	39.8	84.0	84.8	84.8	410	218	271	68
57	132M	5.5	7.50	960	12.8	54.7	85.5	86.1	86.1	410	218	271	72
65	160M	7.5	10.0	970	15	73.9	88.3	88.7	88.3	488	264	329	113
67	160L	11.0	15.0	970	22	108	89.0	89.5	89.2	532	264	329	136
74	180L	15.0	20.0	970	27.9	148	90.3	90.5	90.3	592	279	360	174
75	200L	18.5	25.0	975	35.7	181	91.0	91.4	91.2	657	317	402	214
84	200L	22.0	30.0	975	42.3	216	91.4	91.7	91.5	657	317	402	225
91	225S/M	30.0	40.0	985	54.4	291	92.6	92.7	92.6	746	384	455	359
92	250S/M	37.0	50.0	985	66.8	359	93.0	93.2	93.0	825	402	486	438
93	280S/M	45.0	60.0	985	84.8	437	93.4	93.6	93.4	931	472	599	596
97	280S/M	55.0	75.0	985	102	534	93.6	93.9	93.8	931	472	599	629

Series Geared Drives: Electric Motors

IE3 PREMIUM EFFICIENCY 2 POLE - 3000RPM

Motor Code *	Frame	Output Power		Speed rpm	FL Amps 400V	FL Torque Nm	Motor Efficiency (%)			Dimensions **			Mass kg
		kW	HP				1/2 Load	3/4 Load	Full Load	X	Y	Z	
19	80	0.75	1.0	2825	1.61	2.54	80.0	82.0	82.0	236	139	159	13.5
20	80	1.1	1.5	2830	2.32	3.71	81.0	83.5	83.5	236	139	159	15
26	90S	1.5	2.0	2875	3.07	4.99	83.0	85.0	85.0	254	157	179	18.5
29	90L	2.2	3.0	2870	4.43	7.32	86.0	86.5	86.3	279	157	179	23.5
39	100L	3.0	4.0	2910	5.77	9.85	85.5	87.3	87.3	316	167	199	32
44	112M	4.0	5.5	2900	7.5	13.2	88.1	89.1	89.5	333	192	222	41
52	132S	5.5	7.5	2930	10.1	17.9	88.3	89.7	90.0	372	218	271	65
58	132S	7.5	10.0	2935	13.9	24.4	89.1	90.5	90.8	372	218	271	69
63	160M	11.0	15.0	2950	20.1	35.6	91.0	92.3	92.7	488	264	329	115
64	160M	15.0	20.0	2950	27.1	48.6	91.5	92.5	92.9	488	264	329	119
69	160L	18.5	25.0	2950	33.3	59.9	92.0	92.9	93.2	532	264	329	136
77	180M	22.0	30.0	2955	39	71.1	92.5	93.3	93.7	554	279	360	176

IE3 PREMIUM EFFICIENCY 4 POLE - 1500RPM

Motor Code *	Frame	Output Power		Speed rpm	FL Amps 400V	FL Torque Nm	Motor Efficiency (%)			Dimensions **			Mass kg
		kW	HP				1/2 Load	3/4 Load	Full Load	X	Y	Z	
18	80	0.75	1.0	1420	1.6	5.05	80.0	82.0	82.5	236	139	159	14.5
24	90S	1.1	1.5	1455	2.34	7.22	83.0	84.5	84.8	254	157	179	19.5
28	90L	1.5	2.0	1450	3.15	9.88	84.0	86.0	86.0	279	157	179	23
36	100L	2.2	3.0	1435	4.56	14.7	86.5	87.0	87.0	316	167	199	31.5
38	L100L	3.0	4.0	1440	6.15	19.9	87.0	88.0	88.0	360	167	199	37.5
46	112M	4.0	5.5	1450	8	26.4	88.7	89.1	89.1	333	192	222	44
54	132S	5.5	7.5	1465	10.3	35.9	90.0	90.7	90.7	372	218	271	69
56	132M	7.5	10.0	1465	13.9	48.9	91.0	91.5	91.5	410	218	271	78
66	160M	11.0	15.0	1470	20.7	71.5	91.0	91.8	92.2	488	264	329	123
68	160L	15.0	20.0	1470	28.4	97.5	91.8	92.5	93.0	532	264	329	145
76	180M	18.5	25.0	1470	34.9	120	92.2	92.9	93.3	554	279	360	180
78	180L	22.0	30.0	1470	40.9	143	92.4	93.0	93.6	592	279	360	198
88	200L	30.0	40.0	1480	56.1	194	92.8	93.6	94.2	657	317	402	243
94	225S/M	37.0	50.0	1480	65.6	239	94.0	94.6	94.6	746	384	455	392
95	225S/M	45.0	60.0	1480	79.4	291	94.2	94.8	94.8	746	384	455	420
96	250S/M	55.0	75.0	1480	96.9	355	94.6	95.0	95.3	825	402	486	507
98	280S/M	75.0	100.0	1485	130	483	94.7	95.2	95.6	931	472	599	729
99	280S/M	90.0	120.0	1485	158	579	95.0	95.5	95.8	931	472	599	777

IE3 PREMIUM EFFICIENCY 6 POLE - 1000RPM

Motor Code *	Frame	Output Power		Speed rpm	FL Amps 400V	FL Torque Nm	Motor Efficiency (%)			Dimensions **			Mass kg
		kW	HP				1/2 Load	3/4 Load	Full Load	X	Y	Z	
23	90S	0.75	1.0	940	1.93	7.62	76.5	79.0	79.0	254	157	179	22
27	100L	1.1	1.5	945	2.69	11.1	80.5	81.0	81.0	316	167	199	29
37	100L	1.5	2.0	950	3.7	15.1	81.5	82.5	82.5	316	167	199	32
45	112M	2.2	3.0	950	5.22	22.1	83.0	84.5	84.5	333	192	222	42
53	132S	3.0	4.0	970	6.74	29.6	86.5	88.0	88.0	372	218	271	61
55	132M	4.0	5.5	960	8.99	39.8	86.0	86.8	86.8	410	218	271	66
57	132M	5.5	7.5	965	12.5	54.5	86.5	88.0	88.0	410	218	271	80
65	160M	7.5	10.0	975	14.7	73.5	89.3	90.3	90.7	488	264	329	122
67	160L	11.0	15.0	975	21.5	108	90.0	90.8	91.2	532	264	329	143
74	180L	15.0	20.0	975	28	147	91.3	91.7	92.0	592	279	360	193
75	200L	18.5	25.0	980	35.2	180	91.7	92.3	92.5	657	317	402	223
84	200L	22.0	30.0	980	41.7	215	92.0	92.6	92.9	657	317	402	240
91	225S/M	30.0	40.0	985	54.2	291	93.7	94.0	94.0	746	384	455	401
92	250S/M	37.0	50.0	985	66.6	359	94.0	94.4	94.4	825	402	486	486
93	280S/M	45.0	60.0	990	83.4	434	94.1	94.8	95.0	931	472	599	678
97	280S/M	55.0	75.0	990	102	531	94.5	95.0	95.3	931	472	599	723

Fenner Geared Drives: Enclosures

DEGREE OF PROTECTION

IEC60034-5 defines the degrees of Ingress Protection (IP) for electrical equipment by two numerals.

The first character indicates the degree of protection against the ingress of SOLID OBJECTS

Number	Definition
0	No protection
1	Protection against solid objects greater than 50mm
2	Protection against solid objects greater than 12mm
3	Protection against solid objects greater than 2.5mm
4	Protection against solid objects greater than 1.0mm
5	Basic Protection against Dust
6	Dust Tight – Fully protected against Dust

The second character indicates the degree of protection against the ingress of LIQUIDS

Number	Definition
0	No protection
1	Protected against dripping water
2	Protected against dripping water when tilted up at 15°
3	Protected against falling spray at any angle up to 60° from vertical
4	Protected against water splashing against the machine from any direction
5	Protected against low pressure wash-down from any direction
6	Protected against high pressure wash-down from any direction
7	Protected against the effects of immersion
8	Protected against the effects of continuous submersion

The current Fenner standard for IEC motors is IP55 "Weatherproof" which is protected against low pressure jets of water and low levels of dust in the environment.

For "High pressure wash-down" environments, IP56 enclosures are recommended.

For "Extremely Dusty" environments IP65 enclosures are recommended.

Section 9:

Gearboxes: Series W

A modular designed aluminium worm box available in a vast range of sizes and ratios for cost effective solutions.

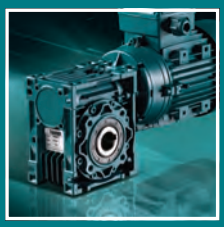

- 9 Sizes with ratings from 0.09 to 7.5kW
- Ratios from 5:1 to 300:1 helical
- Modular design with multiple flange options to interchange aith other makes
- Hollow bore or solid shaft versions
- Accepts standard IEC motors

Geared Drives: Design Data Required	
Motorised(integralmotor)ornon-motorised?	> If motorised: electrical supply available any special motor features required (brake, clutch, flameproof etc.) > If non-motorised: type of prime mover, rotational speed of prime mover, power rating of prime mover, is an input shaft coupling required? If so, prime mover shaft dia.
Shaft mounting or flange mounted?	>Ifshaftmounted,machineshaftdiameter/length > if shaft mounted, is an output shaft coupling required?
Type of driven machine	
Rotational speed of driven machine	> constant or variable over what range?
Power absorbed by driven machine (or required output torque)	
Hours/day duty & start/stop frequency	

Series W	Page
Selection Procedure	319
Motorised Selection	320
Dimensions - worm geared motor	326
Dimensions - motor input	327
Dimensions - options	328
Dimensions - Heli-worm	330
Non-motorised selection	331
Dimensions - reducers	335
Mesh Data	336
Ordering Instructions	337
Ratio Codes	338
Overhung Loads	339
Installation & Maintenance	340

Visit www.fptgroup.com

SERIES W

Vast range of sizes and ratios for cost effective solutions.

- 11 Sizes with ratings from 0.06 to 15kW
- Ratios from 5:1 to 5000:1 with helical or double worm combinations
- Interchangeable dimensionally with other makes
- Hollow bore or solid shaft versions
- Accepts standard IEC motors

Fenner®

THE MARK OF ENGINEERING EXCELLENCE

www.fptgroup.com

Series W Gearboxes : Motorised selection

MOTORISED UNITS SELECTION PROCEDURE

(a) Service Factor
From Table 1 select the Mechanical Service Factor (Fm) applicable to the drive. If the unit is to be subjected to frequent stop/starts in excess of 10 times per day then multiply factor Fm by Factor Fs from table 2.

(b) Motor Power
Refer to the selection tables on pages 320 to 325 and choose a motor power equal to or in excess of that required, if the motor power is not known then from the formula below determine the power requirements of the driven machine and select a motor power in excess of the calculated machine absorbed power.

$$P_2 = \frac{M_2 \times n_2}{9550}$$

P_2 = machine absorbed power (kW)
M_2 = machine absorbed torque (Nm)
n_2 = machine speed (rev/min)

(c) Unit Selection
Refer to the selection tables on page 320 to 325 and choose a motor power equal to or closest above that calculated in step (b). Then read down the column headed "Nominal Output Speed" until a speed equal to or near to the required speed is found. On this line read across to the service factor column and check that the service factor exceeds the value from step (a). If the service factor is either lower or much higher than that required check the speeds at each side of the required speed to see if a more suitable unit and factor can be found.

(d) Overhung Loads
If the unit is to be fitted with an output shaft and an indirect drive attached to the shaft, calculate the overhung load value using the formula on page 339 and compare this value with the maximum allowable value given in column 5 of the selection tables.

If the value exceeds the maximum allowed, then either re-design the indirect drive or select a larger unit capable of supporting the overhung load.

(e) Shaft Mounted
If the unit is to be shaft mounted determine the relevant machine shaft size from the dimension tables on page 326. Torque arm dimensions can be found on page 329.

SELECTION EXAMPLE

A series W shaft mounted gearbox is required to drive a variable density mixer, which absorbs 450 Nm at 36 rev/min and operates for up to 8 hours per day. The mixer stops and starts on average 4 times a day. Specify the shaft diameter required to fit the unit selected, a torque arm bracket is also required please specify the relevant product code.

(a) Service Factor
From table 1, a variable density mixer is classed as a moderately loaded machine and when running for 8 hours per day has a service factor of 1.2.

The machine stops and starts only 4 times a day therefore an additional stop/start factor is not required.

(b) Motor Power
To determine the required motor power use the absorbed torque and the machine shaft speed in the formula given. Then use the next largest standard motor power above this.

Therefore the absorbed Power

$$P_2 = \frac{450 \times 36}{9550} = 1.7 \text{ kW}$$

(c) Unit Selection
The nearest standard motor power above 1.7 kW is 2.2 kW therefore we go to the 2.2 kW geared motor selections on page 324.

Reading down the column headed nominal output speed it is found that there are 2 units listed at 36 rev/min, at the first one of these read across to maximum service factor column, it can be seen that the unit size 747A0645 has a service factor of 1.4.

This exceeds the 1.2 Service factor required and therefore is suitable for the application.

(d) Overhung Loads
The gearbox is to be shaft mounted therefore there are no overhung loads present.

(e) Shaft Mounted
The unit is to be shaft mounted, referring to page 326 we see that the hub bore size is 42 mm.

From page 329 the torque arm bracket to suit the size 747 unit selected has a product code of 748A9600.

TABLE 1 - MECHANICAL SERVICE FACTOR (Fm)

Types of Driven Machine	Operational Hours		
	Under 3	3 to 10	Over 10
Uniform Loads Agitators and Mixers – liquid or semi-liquid Blowers – centrifugal Bottling Machines Conveyors and Elevators – uniformly loaded Cookers Laundry Washing Machines – non-reversing Line Shafts Pumps – centrifugal and gear Wire Drawing Machines	0.80	1.00	1.20
Moderate Shock Loads Agitators and Mixers – variable density Conveyors – not uniformly loaded Cranes travel motion and hoisting Drawbench Feeders – pulsating load Hoists Kilns Laundry Tumblers Lifts Pumps – reciprocating with 3 or more cylinders Pump and Paper Making Machinery Rubber Mixers and Calendars Screens – rotary Textile Machinery	1.00	1.20	1.40
Heavy Shock Loads Brick Presses Briquetting Machines Conveyors – reciprocating and shaker Crushers Feeders – reciprocating Hammer Mills Pumps – reciprocating, 1 or 2 cylinders Rubber Masticators Screens – vibrating	1.50	1.75	2.00

For High Inertia Applications, consult your authorised distributor for verification of selection

TABLE 2 - STARTING FACTOR (Fs)

	Start/stops per hour					
	Up to 5	6 - 20	21 - 30	31 - 50	51 - 80	81 - 100
Uniform Load	1.00	1.05	1.10	1.15	1.20	1.25
Moderate Shock Load	1.05	1.10	1.20	1.25	1.35	1.40
Heavy Shock Load	1.20	1.25	1.30	1.40	1.45	1.50

Series W Gearboxes : Motorised selection

Bold print indicates 6 pole motor, italics indicates 2 pole motor, all others are 4 pole motors.

0.09 KW MOTOR

Nominal Output Rev/Min	Output Torque Nm	Service Factor	Unit Selection	Overhung Load N
551	1.4	8.65	741A0143	474
367	2.0	5.50	740A0243	399
367	2.0	6.39	741A0243	542
276	2.6	4.73	740A0343	439
276	2.7	4.91	741A0343	597
264	2.8	6.36	741A0114	597
184	3.7	3.16	740A0443	503
184	3.8	3.43	741A0443	683
180	4.1	4.93	741A0115	692
180	4.2	9.63	742A0115	1331
176	4.2	2.64	740A0214	399
176	4.2	4.34	741A0214	683
138	4.9	2.47	741A0543	752
138	4.7	2.56	740A0543	553
132	5.4	2.27	740A0314	439
132	5.3	3.38	741A0314	752
120	6.0	3.37	741A0215	792
120	6.1	7.23	742A0215	1524
110	5.5	2.28	740A0643	633
110	5.8	2.78	741A0643	810
92	6.3	2.11	740A0743	633
92	6.7	2.26	741A0743	861
90	7.6	2.62	741A0315	871
90	7.9	5.56	742A0315	1677
88	7.7	1.52	740A0414	503
88	7.5	2.40	741A0414	861
69	8.2	1.70	741A0843	948
69	7.7	1.75	740A0843	697
66	9.8	1.23	740A0514	553
66	9.5	1.90	741A0514	948
60	10.6	1.89	741A0415	997
60	11.2	4.03	742A0415	1920
55	9.1	1.20	740A0943	751
55	9.7	1.35	741A0943	1021
55	10.6	2.83	742A0943	1964
53	11.6	1.09	740A0614	633
53	11.1	1.90	741A0614	1021
46	10.3	0.96	740A1043	798
46	10.9	1.11	741A1043	1085
46	12.2	2.31	742A1043	2104
45	13.4	1.50	741A0515	1098
45	14.3	3.08	742A0515	2113
44	13.1	1.01	740A0714	633
44	12.7	1.58	741A0714	1085
36	15.3	1.51	741A0615	1183
36	17.2	2.51	742A0615	2276
34	13.0	0.85	741A1143	1194
34	14.7	1.70	742A1143	2384
33	16.2	0.84	740A0814	697
33	15.4	1.18	741A0814	1194
30	17.5	1.21	741A0715	1257
30	18.9	2.60	742A0715	2419
28	16.9	1.37	742A1243	2664
26	18.9	0.58	740A0914	751
26	17.9	0.95	741A0914	1286
26	20.2	1.94	742A0914	2475
23	21.0	0.96	741A0815	1383
23	23.7	1.91	742A0815	2662
23	24.1	3.41	743A0815	3654
22	21.5	0.46	740A1014	798
22	19.9	0.81	741A1014	1367
22	22.7	1.59	742A1014	2630
18	24.4	0.74	741A0915	1490
18	27.2	1.55	742A0915	2868
18	28.2	2.74	743A0915	3936
17	22.9	0.57	741A1114	1540
17	27.1	1.22	742A1114	2895
15	31.0	1.27	742A1015	3047
15	31.5	2.29	743A1015	4183
13	30.6	0.95	742A1214	3118
12	40.1	0.80	741A2015	1706
12	47.3	1.21	742A2015	3283
11	36.7	0.96	742A1115	3354
11	37.4	1.82	743A1115	4604
10	46.4	0.63	741A2115	1813
10	51.6	1.32	742A2115	3488
9	41.1	0.78	742A1215	3490
9	42.0	1.34	743A1215	4840
8	55.0	0.48	741A2215	1820
8	61.9	0.99	742A2215	3490
8	63.0	1.83	743A2215	4840
6	63.0	0.39	741A2315	1820
6	71.6	0.79	742A2315	3490
6	73.1	1.51	743A2315	4840
5	79.1	0.68	742A2415	3490
5	80.8	1.22	743A2415	4840
4	94.0	0.48	742A2515	3490
4	94.0	0.86	743A2515	4840
3	103.1	0.40	742A2615	3490
3	106.0	0.70	743A2615	4840

0.12 KW MOTOR

Nominal Output Rev/Min	Output Torque Nm	Service Factor	Unit Selection	Overhung Load N
551	1.9	6.49	741A0147	474
367	2.7	4.12	740A0247	399
367	2.7	4.79	741A0247	542
276	3.6	4.99	741A0148	597
276	3.7	9.21	742A0148	1149
276	3.5	3.55	740A0347	439
276	3.5	3.68	741A0347	597
184	5.3	3.41	741A0248	683
184	5.4	7.39	742A0248	1315
184	4.9	2.37	740A0447	503
184	5.1	2.58	741A0447	683
181	5.4	3.72	741A0113	692
181	5.5	7.27	742A0113	1331
138	6.8	2.65	741A0348	752
138	7.1	5.67	742A0348	1447
138	6.5	1.85	741A0547	752
138	6.2	1.92	740A0547	553
121	7.9	2.54	741A0213	792
121	8.1	5.46	742A0213	1524
110	7.4	1.71	740A0647	633
110	7.7	2.08	741A0647	810
92	9.6	1.88	741A0448	861
92	10.2	3.92	742A0448	1657
92	8.4	1.58	740A0747	633
92	8.9	1.70	741A0747	861
91	10.1	1.98	741A0313	871
91	10.5	4.19	742A0313	1677
69	12.1	1.49	741A0548	948
69	13.0	3.02	742A0548	1824
69	11.0	1.28	741A0847	948
69	10.3	1.31	740A0847	697
60	14.1	1.43	741A0413	997
60	14.8	3.04	742A0413	1920
55	14.1	1.49	741A0648	1021
55	15.6	2.45	742A0648	1964
55	12.1	0.90	740A0947	751
55	12.9	1.01	741A0947	1021
55	14.2	2.13	742A0947	1964
46	16.2	1.24	741A0748	1085
46	17.4	2.59	742A0748	2087
46	13.7	0.72	740A1047	798
46	14.5	0.83	741A1047	1085
46	16.2	1.73	742A1047	2104
45	17.7	1.13	741A0513	1098
45	19.0	2.32	742A0513	2113
36	20.3	1.14	741A0613	1183
36	22.8	1.89	742A0613	2276
35	19.6	0.92	741A0848	1194
35	21.6	1.90	742A0848	2298
35	22.3	3.42	743A0848	3153
34	17.3	0.64	741A1147	1194
34	19.6	1.28	742A1147	2384
30	23.2	0.91	741A0713	1257
30	25.1	1.96	742A0713	2419
28	22.8	0.75	741A0948	1286
28	25.8	1.52	742A0948	2475
28	26.2	2.80	743A0948	3397
28	22.5	1.03	742A1247	2664
23	28.9	1.25	742A1048	2630
23	29.4	2.32	743A1048	3610
23	27.9	0.72	741A0813	1383
23	31.4	1.44	742A0813	2662
23	31.9	2.57	743A0813	3654
18	38.0	0.77	741A2048	1200
18	43.0	1.15	742A2048	2833
18	32.3	0.56	741A0913	1490
18	36.1	1.17	742A0913	2868
18	37.4	2.07	743A0913	3936
17	34.6	0.96	742A1148	2895
17	35.2	1.85	743A1148	3973
15	42.6	0.62	741A2148	1621
15	47.1	1.24	742A2148	3011
15	41.0	0.96	742A1013	3047
15	41.8	1.73	743A1013	4183
14	39.0	0.75	742A1248	3118
14	40.7	1.36	743A1248	4280
12	53.2	0.61	741A2013	1706
12	62.7	0.91	742A2013	3283
12	51.8	0.45	741A2248	1785
12	57.8	0.92	742A2248	3314
12	58.8	1.67	743A2248	4548
11	48.6	0.72	742A1113	3354
11	49.6	1.37	743A1113	4604
10	61.5	0.48	741A2113	1813
10	68.4	1.00	742A2113	3488
9	58.5	0.36	741A2348	1880
9	67.3	0.73	742A2348	3490
9	68.5	1.33	743A2348	4840
9	54.5	0.59	742A1213	3490
9	55.7	1.01	743A1213	4840
8	74.7	0.62	742A2448	3490
8	82.2	1.01	743A2448	4840
8	72.9	0.36	741A2213	1820
8	82.1	0.75	742A2213	3490
8	83.6	1.38	743A2213	4840
6	83.6	0.29	741A2313	1820
6	95.0	0.59	742A2313	3490
6	96.9	1.14	743A2313	4840
6	87.7	0.46	742A2548	3490
6	89.7	0.84	743A2548	4840
5	104.8	0.51	742A2413	3490
5	107.1	0.92	743A2413	4840
5	97.2	0.38	742A2648	3490
5	99.7	0.66	743A2648	4840
4	124.6	0.37	742A2513	3490
4	124.6	0.65	743A2513	4840
3	136.8	0.30	742A2613	3490
3	140.6	0.53	743A2613	4840

0.18KW MOTOR

Nominal Output Rev/Min	Output Torque Nm	Service Factor	Unit Selection	Overhung Load N
554	2.8	4.35	741A0101	474
554	2.8	8.60	742A0101	912
369	4.1	3.22	741A0201	542
369	4.2	6.76	742A0201	1044
277	5.3	2.47	741A0301	597
277	5.5	5.32	742A0301	1149
276	5.4	3.33	741A0102	597
276	5.6	6.14	742A0102	1149
185	7.6	1.73	741A0401	683
185	7.8	3.97	742A0401	1315
184	8.0	2.27	741A0202	683
184	8.1	4.93	742A0202	1315
178	8.4	4.77	742A0105	1331
178	8.5	8.83	743A0105	1827
139	9.7	1.24	741A0501	752
139	10.2	2.85	742A0501	1447
138	10.2	1.77	741A0302	752
138	10.6	3.78	742A0302	1447
119	12.3	3.58	742A0205	1524

Series W Gearboxes : Motorised selection

Nominal Output Rev/Min	Output Torque Nm	Service Factor	Unit Selection	Overhung Load N
119	12.5	6.75	743A0205	2091
111	11.5	1.40	741A0601	810
111	12.3	2.29	742A0601	1559
92	13.2	1.14	741A0701	861
92	14.2	2.41	742A0701	1657
92	14.4	1.26	741A0402	861
92	15.3	2.62	742A0402	1657
89	16.0	2.75	742A0305	1677
89	16.2	5.18	743A0305	2302
69	16.4	0.86	741A0801	948
69	17.9	1.74	742A0801	1824
69	18.1	3.26	743A0801	2503
69	18.2	0.99	741A0502	948
69	19.4	2.01	742A0502	1824
59	22.6	2.00	742A0405	1920
59	22.9	3.68	743A0405	2635
55	19.2	0.68	741A0901	1021
55	21.1	1.43	742A0901	1964
55	21.4	2.48	743A0901	2696
55	21.2	1.00	741A0602	1021
55	23.4	1.63	742A0602	1964
46	24.2	1.16	742A1001	2104
46	24.6	2.04	743A1001	2865
46	24.3	0.83	741A0702	1085
46	26.2	1.73	742A0702	2087
45	29.0	1.52	742A0505	2113
45	29.4	2.63	743A0505	2900
36	34.8	1.24	742A0605	2276
36	35.3	2.13	743A0605	3124
35	29.3	0.86	742A1101	2384
35	30.3	1.49	743A1101	3153
35	29.4	0.62	741A0802	1194
35	32.4	1.27	742A0802	2298
35	33.4	2.28	743A0802	3153
30	38.3	1.29	742A0705	2419
30	39.4	2.29	743A0705	3320
28	33.5	0.69	742A1201	2664
28	34.8	1.16	743A1201	3397
28	34.3	0.50	741A0902	1286
28	38.6	1.01	742A0902	2475
28	39.2	1.87	743A0902	3397
23	43.4	0.84	742A1002	2630
23	44.1	1.55	743A1002	3610
22	47.9	0.94	742A0805	2662
22	48.7	1.69	743A0805	3654
18	57.0	0.51	741A2002	1200
18	64.5	0.77	742A2002	2833
18	57.0	1.36	743A0905	3936
18	61.8	3.56	745A0905	6073
17	51.8	0.64	742A1102	2895
17	52.8	1.24	743A1102	3973
15	63.9	0.41	741A2102	1621
15	70.6	0.83	742A2102	3011
15	63.7	1.13	743A1005	4183
15	70.7	2.98	745A1005	6453
14	58.6	0.50	742A1202	3118
14	61.0	0.91	743A1202	4280
12	95.6	0.60	742A2005	3283
12	95.6	1.09	743A2005	4506
12	77.7	0.30	741A2202	1785
12	86.7	0.62	742A2202	3314
12	88.2	1.12	743A2202	4548
11	75.7	0.90	743A1105	4604
11	85.0	2.36	745A1105	7103
10	104.3	0.66	742A2105	3488
10	106.0	1.26	743A2105	4788
9	87.8	0.24	741A2302	1880
9	100.9	0.49	742A2302	3490
9	102.8	0.89	743A2302	4840
9	85.0	0.66	743A1205	4840
9	96.6	1.97	745A1205	7380
8	112.1	0.42	742A2402	3490
8	123.3	0.68	743A2402	4840
7	125.2	0.49	742A2205	3490
7	127.5	0.91	743A2205	4840
7	132.1	1.64	744A2205	6270
6	147.8	0.75	743A2305	4840
6	153.6	1.32	744A2305	6270

Nominal Output Rev/Min	Output Torque Nm	Service Factor	Unit Selection	Overhung Load N
6	159.3	1.87	745A2305	7380
6	131.5	0.31	742A2502	3490
6	134.5	0.56	743A2502	4840
5	163.4	0.60	743A2405	4840
5	170.4	1.09	744A2405	6270
5	180.8	1.55	745A2405	7380
5	145.7	0.25	742A2602	3490
5	149.5	0.44	743A2602	4840
4	190.1	0.43	743A2505	4840
4	199.3	0.81	744A2505	6270
4	213.2	1.12	745A2505	7380
3	214.4	0.35	743A2605	4840
3	220.2	0.65	744A2605	6270
3	237.6	0.94	745A2605	7380

0.25W MOTOR

Nominal Output Rev/Min	Output Torque Nm	Service Factor	Unit Selection	Overhung Load N
552	3.9	3.12	741A0103	474
552	3.9	6.17	742A0103	912
368	5.7	2.31	741A0203	542
368	5.8	4.85	742A0203	1044
276	7.4	1.77	741A0303	597
276	7.6	3.81	742A0303	1149
272	7.8	4.36	742A0106	1149
272	7.8	7.94	743A0106	1577
184	10.5	1.24	741A0403	683
184	10.9	2.85	742A0403	1315
181	11.5	3.50	742A0206	1315
181	11.6	6.13	743A0206	1805
180	11.5	3.47	742A0107	1331
180	11.7	6.43	743A0107	1827
138	13.5	0.89	741A0503	752
138	14.2	2.05	742A0503	1447
136	14.9	2.69	742A0306	1447
136	15.1	4.77	743A0306	1987
120	16.9	2.61	742A0207	1524
120	17.1	4.91	743A0207	2091
110	16.0	1.00	741A0603	810
110	17.1	1.64	742A0603	1559
92	18.4	0.82	741A0703	861
92	19.7	1.73	742A0703	1657
91	21.6	1.86	742A0406	1657
91	21.6	3.43	743A0406	2274
90	22.0	2.00	742A0307	1677
90	22.3	3.77	743A0307	2302
69	22.8	0.62	741A0803	948
69	24.9	1.25	742A0803	1824
69	25.3	2.34	743A0803	2503
68	27.4	1.43	742A0506	1824
68	27.7	2.64	743A0506	2503
60	31.0	1.45	742A0407	1920
60	31.4	2.68	743A0407	2635
55	26.8	0.49	741A0903	1021
55	29.4	1.03	742A0903	1964
55	29.9	1.78	743A0903	2696
54	32.9	1.16	742A0606	1964
54	33.4	2.10	743A0606	2696
46	33.7	0.83	742A1003	2104
46	34.3	1.46	743A1003	2865
45	36.9	1.23	742A0706	2087
45	37.9	2.22	743A0706	2865
45	39.8	1.11	742A0507	2113
45	40.3	1.91	743A0507	2900
36	47.8	0.91	742A0607	2276
36	48.4	1.55	743A0607	3124
35	40.8	0.62	742A1103	2384
35	42.2	1.07	743A1103	3153
34	45.7	0.90	742A0806	2298
34	47.1	1.62	743A0806	3153
34	49.2	2.95	744A0806	4122
30	52.5	0.94	742A0707	2419
30	54.1	1.67	743A0707	3320
28	46.7	0.50	742A1203	2664

Nominal Output Rev/Min	Output Torque Nm	Service Factor	Unit Selection	Overhung Load N
28	48.5	0.83	743A1203	3397
27	55.3	1.33	743A0906	3397
27	57.9	2.34	744A0906	4440
27	60.6	3.47	745A0906	5241
23	62.2	1.10	743A1006	3610
23	65.3	2.00	744A1006	4719
23	68.5	2.93	745A1006	5569
23	65.8	0.69	742A0807	2662
23	66.9	1.23	743A0807	3654
18	90.8	0.54	742A2006	2833
18	90.8	1.01	743A2006	3889
18	78.3	0.99	743A0907	3936
18	84.9	2.60	745A0907	6073
17	74.4	0.88	743A1106	3973
17	80.1	1.53	744A1106	5193
17	84.3	2.26	745A1106	6130
15	99.5	0.59	742A2106	3011
15	101.1	1.07	743A2106	4132
15	87.6	0.83	743A1007	4183
15	97.1	2.17	745A1007	6453
14	86.0	0.64	743A1206	4280
14	89.5	1.32	744A1206	5595
14	96.6	1.87	745A1206	6603
12	131.3	0.44	742A2007	3283
12	131.3	0.80	743A2007	4506
11	122.2	0.44	742A2206	3314
11	124.3	0.79	743A2206	4548
11	128.5	1.44	744A2206	5945
11	104.0	0.66	743A1107	4604
11	116.7	1.72	745A1107	7103
10	143.3	0.48	742A2107	3488
10	145.6	0.92	743A2107	4788
9	144.8	0.63	743A2306	4840
9	147.5	1.18	744A2306	6270
9	155.4	1.61	745A2306	7380
9	116.7	0.48	743A1207	4840
9	132.6	1.44	745A1207	7380
8	173.8	0.48	743A2406	4840
8	167.5	0.96	744A2406	6270
8	177.0	1.36	745A2406	7380
8	171.9	0.36	742A2207	3490
8	175.1	0.66	743A2207	4840
8	181.5	1.20	744A2207	6270
6	202.9	0.55	743A2307	4840
6	210.9	0.96	744A2307	6270
6	218.9	1.36	745A2307	7380
6	189.6	0.40	743A2506	4840
6	198.0	0.70	744A2506	6270
6	206.4	1.05	745A2506	7380
5	224.4	0.44	743A2407	4840
5	234.0	0.80	744A2407	6270
5	248.3	1.13	745A2407	7380
5	210.7	0.31	743A2606	4840
5	221.2	0.58	744A2606	6270
5	237.0	0.89	745A2606	7380
4	261.0	0.31	743A2507	4840
4	273.8	0.59	744A2507	6270
4	292.9	0.82	745A2507	7380
3	294.5	0.26	743A2607	4840
3	302.4	0.47	744A2607	6270
3	326.3	0.69	745A2607	7380

Series W Gearboxes : Motorised selection

Bold print indicates 6 pole motor, italics indicates 2 pole motor, all others are 4 pole motors.

0.37 KW MOTOR

Nominal Output Rev/Min	Output Torque Nm	Service Factor	Unit Selection	Overhung Load N
560	5.7	4.23	742A0109	912
560	5.8	7.84	743A0109	1251
373	8.4	3.33	742A0209	1044
373	8.5	6.11	743A0209	1433
280	11.1	2.62	742A0309	1149
280	11.1	4.87	743A0309	1577
273	11.5	2.96	742A0108	1149
273	11.5	5.39	743A0108	1577
187	15.9	1.95	742A0409	1315
187	16.1	3.55	743A0409	1805
182	16.9	2.37	742A0208	1315
182	17.1	4.16	743A0208	1805
182	17.1	4.39	743A0112	1827
140	20.7	1.41	742A0509	1447
140	20.7	2.57	743A0509	1987
137	22.0	1.82	742A0308	1447
137	22.3	3.24	743A0308	1987
121	25.1	3.36	743A0212	2091
121	25.3	5.96	744A0212	2735
112	24.9	1.13	742A0609	1559
112	25.2	2.03	743A0609	2140
93	28.8	1.19	742A0709	1657
93	28.8	2.23	743A0709	2274
91	31.9	1.26	742A0408	1657
91	31.9	2.33	743A0408	2274
91	32.6	2.58	743A0312	2302
91	33.0	4.64	744A0312	3009
70	36.4	0.86	742A0809	1824
70	36.9	1.61	743A0809	2503
70	37.9	2.86	744A0809	3272
68	40.4	0.97	742A0508	1824
68	40.9	1.79	743A0508	2503
61	46.0	1.83	743A0412	2635
61	47.2	3.29	744A0412	3444
56	43.5	1.22	743A0909	2696
56	44.8	2.24	744A0909	3524
56	46.7	3.22	745A0909	4160
55	48.5	0.79	742A0608	1964
55	49.2	1.43	743A0608	2696
47	50.0	1.01	743A1009	2865
47	51.5	1.85	744A1009	3745
47	53.8	2.70	745A1009	4421
46	54.4	0.83	742A0708	2087
46	59.0	1.31	743A0512	2900
46	55.9	1.51	743A0708	2865
46	59.8	2.48	744A0512	3791
46	61.4	3.84	745A0512	4474
36	70.9	1.06	743A0612	3124
36	72.8	1.89	744A0612	4084
36	74.8	2.88	745A0612	4820
35	61.6	0.74	743A1109	3153
35	63.6	1.34	744A1109	4122
35	66.6	1.96	745A1109	4865
34	67.3	0.61	742A0808	2298
34	69.4	1.10	743A0808	3153
30	79.2	1.14	743A0712	3320
30	81.6	2.15	744A0712	4339
30	85.0	3.06	745A0712	5122
28	70.7	0.57	743A1209	3397
28	73.2	1.02	744A1209	4440
28	77.0	1.56	745A1209	5241
27	81.6	0.90	743A0908	3397
27	89.3	2.36	745A0908	5241
23	91.6	0.75	743A1008	3610
23	97.9	0.84	743A0812	3654
23	101.0	1.59	744A0812	4776
23	101.0	1.99	745A1008	5569
23	105.6	2.28	745A0812	5637
23	110.3	3.72	746A0812	6328
18	134.0	0.37	742A2008	2833
18	134.0	0.68	743A2008	3889
18	118.4	1.23	744A0912	5145
18	124.3	1.78	745A0912	6073
18	132.0	2.96	746A0912	6719
17	109.8	0.60	743A1108	3973
17	124.3	1.53	745A1108	6130
15	146.8	0.40	742A2108	3011
15	149.1	0.73	743A2108	4132
15	135.1	1.03	744A1012	5467
15	142.1	1.48	745A1012	6453
15	149.1	2.35	746A1012	7140
14	126.9	0.44	743A1208	4280
14	142.4	1.27	745A1208	6603
12	192.2	0.55	743A2012	4506
12	198.0	0.99	744A2012	5810
12	203.9	1.50	745A2012	6952
11	180.2	0.30	742A2208	3314
11	183.3	0.54	743A2208	4548
11	161.5	0.80	744A1112	6018
11	189.5	0.98	744A2208	5945
11	170.9	1.18	745A1112	7103
11	183.3	1.72	746A1112	7859
10	213.2	0.63	743A2112	4788
10	216.7	1.11	744A2112	6259
10	227.2	1.59	745A2112	7380
9	213.6	0.43	743A2308	4840
9	217.4	0.80	744A2308	6270
9	194.2	0.98	745A1212	7380
9	229.1	1.10	745A2308	7380
9	209.7	1.34	746A1212	8180
8	256.3	0.33	743A2408	4840
8	256.3	0.45	743A2212	4840
8	247.0	0.65	744A2408	6270
8	265.6	0.82	744A2212	6270
8	260.9	0.92	745A2408	7380
8	279.6	1.20	745A2212	7380
8	293.6	1.94	746A2212	8180
6	308.7	0.66	744A2312	6270
6	320.3	0.93	745A2312	7380
6	343.6	1.53	746A2312	8180
6	279.6	0.27	743A2508	4840
6	292.0	0.47	744A2508	6270
6	304.4	0.71	745A2508	7380
5	342.5	0.55	744A2412	6270
5	363.4	0.78	745A2412	7380
5	384.4	1.23	746A2412	8180
5	310.6	0.21	743A2608	4840
5	326.2	0.40	744A2608	6270
5	349.5	0.61	745A2608	7380
4	400.7	0.40	744A2512	6270
4	428.7	0.56	745A2512	7380
4	466.0	0.92	746A2512	8180
3	477.6	0.47	745A2612	7380
3	524.2	0.74	746A2612	8180

0.55 KW MOTOR

Nominal Output Rev/Min	Output Torque Nm	Service Factor	Unit Selection	Overhung Load N
556	8.5	2.83	742A0110	912
556	8.6	5.24	743A0110	1251
371	12.6	2.23	742A0210	1044
371	12.8	4.08	743A0210	1433
282	16.6	3.75	743A0116	1577
278	16.6	1.75	742A0310	1149
278	16.6	3.25	743A0310	1577
188	24.6	2.89	743A0216	1805
188	24.6	5.21	744A0216	2360
185	23.8	1.31	742A0410	1315
185	24.1	2.37	743A0410	1805
182	25.4	2.96	743A0117	1827
141	32.0	2.25	743A0316	1987
141	32.4	4.02	744A0316	2597
139	31.0	0.94	742A0510	1447
139	31.0	1.72	743A0510	1987
121	37.2	2.26	743A0217	2091
121	37.7	4.01	744A0217	2735
111	37.3	0.76	742A0610	1559
111	37.8	1.35	743A0610	2140
94	45.8	1.62	743A0416	2274
94	46.4	3.02	744A0416	2973
93	43.1	0.79	742A0710	1657
93	43.1	1.49	743A0710	2274
91	48.5	1.74	743A0317	2302
91	49.1	3.12	744A0317	3009
71	58.9	1.25	743A0516	2503
71	60.4	2.24	744A0516	3272
71	61.1	3.44	745A0516	3862
70	54.4	0.57	742A0810	1824
70	55.2	1.07	743A0810	2503
70	56.7	1.91	744A0810	3272
61	68.4	1.23	743A0417	2635
61	70.1	2.22	744A0417	3444
56	70.8	0.99	743A0616	2696
56	72.7	1.79	744A0616	3524
56	74.5	2.69	745A0616	4160
56	65.2	0.82	743A0910	2696
56	67.1	1.50	744A0910	3524
56	69.9	2.15	745A0910	4160
47	80.5	1.05	743A0716	2865
47	82.7	1.94	744A0716	3745
47	84.9	2.71	745A0716	4421
46	74.8	0.67	743A1010	2865
46	77.1	1.24	744A1010	3745
46	80.5	1.81	745A1010	4421
46	87.7	0.88	743A0517	2900
46	88.9	1.67	744A0517	3791
46	91.2	2.58	745A0517	4474
36	105.3	0.72	743A0617	3124
36	108.2	1.27	744A0617	4084
36	111.1	1.94	745A0617	4820
35	99.8	0.77	743A0816	3153
35	104.3	1.40	744A0816	4122
35	107.3	2.06	745A0816	4865
35	111.8	3.23	746A0816	5383
35	92.2	0.49	743A1110	3153
35	95.2	0.90	744A1110	4122
35	99.8	1.31	745A1110	4865
30	117.8	0.77	743A0717	3320
30	121.2	1.45	744A0717	4339
30	126.4	2.06	745A0717	5122
28	122.9	1.10	744A0916	4440
28	128.5	1.64	745A0916	5241
28	134.1	2.54	746A0916	5799
28	105.8	0.38	743A1210	3397
28	109.6	0.68	744A1210	4440
28	115.3	1.05	745A1210	5241
24	138.6	0.94	744A1016	4719
24	145.3	1.38	745A1016	5569
24	154.2	2.08	746A1016	6163
23	145.5	0.57	743A0817	3654
23	150.1	1.07	744A0817	4776
23	157.0	1.53	745A0817	5637
23	163.9	2.51	746A0817	6328
19	192.8	0.48	743A2016	3889
19	198.4	0.83	744A2016	5083
19	204.0	1.26	745A2016	6000
18	176.1	0.83	744A0917	5145
18	184.7	1.20	745A0917	6073
18	196.3	1.99	746A0917	6719
18	169.9	0.72	744A1116	5193
18	178.8	1.07	745A1116	6130
18	187.8	1.52	746A1116	6783
16	214.6	0.51	743A2116	4132
16	217.9	0.92	744A2116	5300
16	228.0	1.32	745A2116	6375
15	200.9	0.69	744A1017	5467
15	211.3	1.00	745A1017	6453
15	221.7	1.58	746A1017	7140
14	204.9	0.88	745A1216	6603
14	219.8	1.23	746A1216	7306
12	285.7	0.37	743A2017	4506
12	294.4	0.67	744A2017	5810
12	303.0	1.01	745A2017	6952
12	263.7	0.38	743A2216	4548
12	272.7	0.68	744A2216	5945
12	281.6	1.00	745A2216	7017
12	295.0	1.63	746A2216	7764
11	240.1	0.54	744A1117	6018
11	254.0	0.79	745A1117	7103

Series W Gearboxes : Motorised selection

Nominal Output Rev/Min	Output Torque Nm	Service Factor	Unit Selection	Overhung Load N
11	272.4	1.16	746A1117	7859
10	316.9	0.42	743A2117	4788
10	322.1	0.75	744A2117	6259
10	337.7	1.07	745A2117	7380
9	312.9	0.56	744A2316	6270
9	329.7	0.76	745A2316	7380
9	352.0	1.28	746A2316	8180
9	288.6	0.66	745A1217	7380
9	311.7	0.90	746A1217	8180
8	355.4	0.46	744A2416	6270
8	375.5	0.64	745A2416	7380
8	395.6	1.02	746A2416	8180
8	381.0	0.31	743A2217	4840
8	394.8	0.55	744A2217	6270
8	415.6	0.81	745A2217	7380
8	436.4	1.30	746A2217	8180
6	458.9	0.45	744A2317	6270
6	476.2	0.63	745A2317	7380
6	510.8	1.03	746A2317	8180
6	420.2	0.33	744A2516	6270
6	438.1	0.50	745A2516	7380
6	473.8	0.78	746A2516	8180
5	509.1	0.37	744A2417	6270
5	540.3	0.52	745A2417	7380
5	571.4	0.83	746A2417	8180
5	502.9	0.42	745A2616	7380
5	547.6	0.64	746A2616	8180
4	595.7	0.27	744A2517	6270
4	637.2	0.38	745A2517	7380
4	692.6	0.62	746A2517	8180
3	710.0	0.32	745A2617	7380
3	779.2	0.50	746A2617	8180

0.75KW MOTOR

Nominal Output Rev/Min	Output Torque Nm	Service Factor	Unit Selection	Overhung Load N
558	11.7	3.86	743A0119	1251
372	17.3	3.01	743A0219	1433
372	17.3	5.37	744A0219	1873
282	22.6	2.75	743A0118	1577
279	22.6	2.40	743A0319	1577
279	22.9	4.25	744A0319	2061
188	33.5	2.12	743A0218	1805
188	33.5	3.82	744A0218	2360
186	32.7	1.75	743A0419	1805
186	33.1	3.12	744A0419	2359
141	43.7	1.65	743A0318	1987
141	44.2	2.95	744A0318	2597
140	42.1	1.26	743A0519	1987
140	43.1	2.32	744A0519	2597
140	43.7	3.67	745A0519	3065
123	51.1	4.21	745A0223	3227
123	51.7	6.58	746A0223	3570
112	51.4	1.00	743A0619	2140
112	52.6	1.75	744A0619	2797
112	53.3	2.82	745A0619	3302
94	62.5	1.19	743A0418	2274
94	63.3	2.22	744A0418	2973
93	58.5	1.10	743A0719	2274
93	60.1	2.00	744A0719	2973
93	61.6	2.76	745A0719	3509
93	66.6	3.46	745A0323	3551
93	67.4	5.50	746A0323	3929
71	80.3	0.91	743A0518	2503
71	82.3	1.65	744A0518	3272
71	83.3	2.53	745A0518	3862
70	75.0	0.79	743A0819	2503
70	77.0	1.41	744A0819	3272
70	79.1	2.09	745A0819	3862
70	81.1	3.39	746A0819	4273
62	95.3	2.47	745A0423	4065
62	97.6	4.31	746A0423	4498
56	96.5	0.73	743A0618	2696
56	99.1	1.32	744A0618	3524

Nominal Output Rev/Min	Output Torque Nm	Service Factor	Unit Selection	Overhung Load N
56	101.6	1.97	745A0618	4160
56	91.1	1.10	744A0919	3524
56	95.0	1.58	745A0919	4160
56	97.6	2.72	746A0919	4603
47	109.7	0.77	743A0718	2865
47	112.8	1.42	744A0718	3745
47	115.8	1.99	745A0718	4421
47	104.8	0.91	744A1019	3745
47	109.4	1.33	745A1019	4421
47	114.0	2.15	746A1019	4891
46	122.4	1.93	745A0523	4474
46	125.5	3.11	746A0523	4951
37	149.1	1.45	745A0623	4820
37	152.9	2.42	746A0623	5333
35	136.1	0.56	743A0818	3153
35	142.2	1.02	744A0818	4122
35	146.3	1.51	745A0818	4865
35	152.4	2.37	746A0818	5383
35	129.4	0.66	744A1119	4122
35	135.6	0.96	745A1119	4865
35	141.7	1.59	746A1119	5383
31	169.6	1.54	745A0723	5122
31	174.2	2.65	746A0723	5667
28	167.6	0.81	744A0918	4440
28	175.3	1.20	745A0918	5241
28	182.9	1.86	746A0918	5799
28	156.6	0.77	745A1219	5241
28	166.9	1.20	746A1219	5799
24	189.0	0.69	744A1018	4719
24	198.1	1.01	745A1018	5569
24	210.3	1.53	746A1018	6163
23	210.6	1.14	745A0823	5637
23	219.9	1.87	746A0823	6238
23	229.2	3.32	747A0823	7882
19	262.9	0.35	743A2018	3889
19	270.5	0.61	744A2018	5083
19	278.1	0.92	745A2018	6000
19	247.8	0.89	745A0923	6073
19	263.3	1.49	746A0923	6719
19	274.9	2.73	747A0923	8491
18	231.6	0.53	744A1118	5193
18	243.8	0.78	745A1118	6130
18	256.0	1.12	746A1118	6783
16	292.6	0.37	743A2118	4132
16	297.2	0.68	744A2118	5300
16	310.9	0.97	745A2118	6375
15	297.4	1.18	746A1023	7140
15	315.9	2.16	747A1023	9023
15	327.9	0.94	745A2023	6453
15	337.3	1.57	746A2023	7140
14	279.4	0.65	745A1218	6603
14	299.7	0.91	746A1218	7306
13	365.4	0.99	745A2123	6952
13	382.3	1.71	746A2123	7859
12	359.6	0.28	743A2218	4548
12	371.8	0.50	744A2218	5945
12	384.0	0.73	745A2218	7017
12	402.3	1.20	746A2218	7764
12	390.3	1.46	747A1123	9931
12	396.5	2.17	749A1123	12989
10	449.7	0.75	745A2223	7380
10	472.2	1.21	746A2223	8180
10	464.7	1.59	747A2223	10320
9	426.7	0.41	744A2318	6270
9	449.6	0.56	745A2318	7380
9	480.0	0.94	746A2318	8180
9	449.1	1.15	747A1223	10320
9	456.9	1.71	749A1223	13500
8	484.6	0.34	744A2418	6270
8	512.0	0.47	745A2418	7380
8	539.5	0.75	746A2418	8180
8	515.3	0.58	745A2323	7380
8	552.8	0.95	746A2323	8180
8	590.3	1.59	747A2323	10320
6	618.4	0.77	746A2423	8180
6	663.3	1.27	747A2423	10320
6	573.0	0.24	744A2518	6270
6	597.4	0.36	745A2518	7380

Nominal Output Rev/Min	Output Torque Nm	Service Factor	Unit Selection	Overhung Load N
6	646.1	0.57	746A2518	8180
5	809.5	0.91	747A2523	10320
5	809.5	1.41	749A2523	13500
5	685.8	0.31	745A2618	7380
5	746.7	0.47	746A2618	8180
4	918.2	0.73	747A2623	10320
4	918.2	1.12	749A2623	13500

1.1 KW MOTOR

Nominal Output Rev/Min	Output Torque Nm	Service Factor	Unit Selection	Overhung Load N
558	17.1	2.63	743A0120	1251
372	25.4	2.05	743A0220	1433
372	25.4	3.66	744A0220	1873
279	33.1	1.63	743A0320	1577
279	33.5	2.90	744A0320	2061
192	48.7	3.80	745A0224	2785
192	49.3	5.89	746A0224	3081
186	48.0	1.19	743A0420	1805
186	48.6	2.13	744A0420	2359
144	64.2	3.04	745A0324	3065
144	64.9	4.78	746A0324	3391
140	61.8	0.86	743A0520	1987
140	63.3	1.59	744A0520	2597
140	64.0	2.50	745A0520	3065
123	75.0	2.87	745A0227	3227
123	75.8	4.49	746A0227	3570
112	75.3	0.68	743A0620	2140
112	77.2	1.20	744A0620	2797
112	78.1	1.92	745A0620	3302
96	93.0	2.16	745A0424	3509
96	94.1	3.83	746A0424	3882
93	85.9	0.75	743A0720	2274
93	88.1	1.37	744A0720	2973
93	90.4	1.89	745A0720	3509
93	97.7	2.36	745A0327	3551
93	98.8	3.75	746A0327	3929
72	119.7	1.76	745A0524	3862
72	122.6	2.90	746A0524	4273
70	110.0	0.54	743A0820	2503
70	113.0	0.96	744A0820	3272
70	116.0	1.43	745A0820	3862
70	119.0	2.32	746A0820	4273
62	139.7	1.69	745A0427	4065
62	143.1	2.94	746A0427	4498
58	145.9	1.38	745A0624	4160
58	149.6	2.28	746A0624	4603
56	133.7	0.75	744A0920	3524
56	139.3	1.08	745A0920	4160
56	143.1	1.86	746A0920	4603
48	166.3	1.39	745A0724	4421
48	170.7	2.41	746A0724	4891
47	153.6	0.62	744A1020	3745
47	160.4	0.91	745A1020	4421
47	167.2	1.47	746A1020	4891
46	179.4	1.31	745A0527	4474
46	184.0	2.12	746A0527	4951
37	218.6	0.99	745A0627	4820
37	224.3	1.65	746A0627	5333
36	210.1	1.05	745A0824	4865
36	218.9	1.65	746A0824	5383
36	227.6	2.95	747A0824	6803
35	189.8	0.45	744A1120	4122
35	198.8	0.66	745A1120	4865
35	207.9	1.09	746A1120	5383
31	248.7	1.05	745A0727	5122
31	255.5	1.81	746A0727	5667
29	251.7	0.84	745A0924	5241
29	262.6	1.30	746A0924	5799
29	273.6	2.42	747A0924	7328
28	229.7	0.53	745A1220	5241
28	244.8	0.82	746A1220	5799

Series W Gearboxes : Motorised selection

Bold print indicates 6 pole motor, italics indicates 2 pole motor, all others are 4 pole motors.

Nominal Output Rev/Min	Output Torque Nm	Service Factor	Unit Selection	Overhung Load N
24	302.0	1.06	746A1024	6163
24	315.2	1.96	747A1024	7787
24	322.2	0.80	745A2024	5569
24	331.0	1.33	746A2024	6163
23	308.9	0.78	745A0827	5637
23	322.5	1.28	746A0827	6238
23	336.2	2.26	747A0827	7882
20	360.1	0.84	745A2124	6000
20	376.0	1.47	746A2124	6783
19	363.4	0.61	745A0927	6073
19	386.1	1.02	746A0927	6719
19	403.2	1.86	747A0927	8491
18	391.0	1.32	747A1124	8571
18	396.9	2.12	749A1124	11210
15	436.1	0.81	746A1027	7140
15	463.4	1.48	747A1027	9023
15	481.0	0.64	745A2027	6453
15	494.7	1.07	746A2027	7140
15	444.9	0.63	745A2224	6603
15	466.1	1.03	746A2224	7306
15	494.3	1.64	747A2224	9838
14	459.6	1.06	747A1224	9232
14	466.9	1.59	749A1224	12076
13	535.9	0.68	745A2127	6952
13	560.7	1.16	746A2127	7859
12	520.8	0.49	745A2324	7017
12	556.1	0.81	746A2324	7764
12	582.6	1.38	747A2324	10320
12	572.4	1.00	747A1127	9931
12	581.5	1.48	749A1127	12989
10	625.0	0.65	746A2424	8180
10	667.3	1.07	747A2424	10320
10	659.6	0.51	745A2227	7380
10	692.6	0.82	746A2227	8180
10	681.6	1.09	747A2227	10320
9	658.7	0.79	747A1227	10320
9	670.1	1.17	749A1227	13500
8	755.8	0.40	745A2327	7380
8	810.8	0.65	746A2327	8180
8	865.7	1.08	747A2327	10320
7	805.0	0.79	747A2524	10320
7	819.2	1.19	749A2524	13500
6	907.0	0.52	746A2427	8180
6	972.9	0.87	747A2427	10320
6	935.7	0.61	747A2624	10320
6	935.7	0.92	749A2624	13500
5	1187.3	0.62	747A2527	10320
5	1187.3	0.96	749A2527	13500
4	1346.7	0.50	747A2627	10320
4	1346.7	0.76	749A2627	13500

1.5 KW MOTOR

Nominal Output Rev/Min	Output Torque Nm	Service Factor	Unit Selection	Overhung Load N
377	34.6	3.76	745A0226	2210
377	35.0	6.01	746A0226	2446
283	45.6	3.18	745A0326	2433
283	45.6	5.15	746A0326	2692
192	66.4	2.79	745A0228	2785
192	67.2	4.32	746A0228	3081
188	66.2	2.27	745A0426	2785
188	66.9	4.04	746A0426	2785
144	87.6	2.23	745A0328	3065
144	88.5	3.51	746A0328	3391
141	86.2	1.86	745A0526	3065
141	88.2	2.95	746A0526	3391
125	100.6	2.14	745A0237	3227
125	101.7	3.35	746A0237	3570
125	101.7	6.39	747A0237	4511
113	105.2	1.43	745A0626	3302
113	107.8	2.33	746A0626	3653
96	126.8	1.58	745A0428	3509
96	128.3	2.81	746A0428	3882

Nominal Output Rev/Min	Output Torque Nm	Service Factor	Unit Selection	Overhung Load N
94	121.7	1.40	745A0726	3509
94	124.8	2.49	746A0726	3882
94	131.1	1.76	745A0337	3551
94	132.6	2.80	746A0337	3929
94	134.1	5.32	747A0337	4965
72	163.2	1.29	745A0528	3862
72	167.1	2.13	746A0528	4273
71	156.2	1.06	745A0826	3862
71	160.2	1.72	746A0826	4273
71	166.3	3.05	747A0826	5399
63	187.5	1.26	745A0437	4065
63	192.0	2.19	746A0437	4498
63	194.3	3.91	747A0437	5684
58	199.0	1.01	745A0628	4160
58	203.9	1.67	746A0628	4603
57	187.6	0.80	745A0926	4160
57	192.7	1.38	746A0926	4603
57	200.3	2.48	747A0926	5816
48	226.8	1.02	745A0728	4421
48	232.8	1.77	746A0728	4891
47	225.2	1.09	746A1026	4891
47	234.3	1.93	747A1026	6181
47	246.9	1.58	746A0537	4951
47	253.0	2.87	747A0537	6256
38	301.0	1.23	746A0637	5333
38	308.6	2.46	747A0637	6739
36	286.5	0.77	745A0828	4865
36	298.4	1.21	746A0828	5383
36	310.4	2.17	747A0828	6803
35	292.1	1.37	747A1126	6803
35	296.1	2.00	749A1126	8897
31	342.9	1.35	746A0737	5667
31	347.5	2.42	747A0737	7161
31	356.6	3.29	749A0737	9366
29	343.2	0.62	745A0928	5241
29	358.1	0.95	746A0928	5799
29	373.1	1.77	747A0928	7328
28	349.9	1.06	747A1226	7328
28	355.0	1.47	749A1226	9584
24	411.9	0.78	746A1028	6163
24	429.8	1.44	747A1028	7787
24	439.3	0.59	745A2028	5569
24	451.4	0.98	746A2028	6163
24	451.1	1.69	747A0837	7882
24	457.2	2.41	749A0837	10309
20	491.1	0.62	745A2128	6000
20	512.8	1.08	746A2128	6783
19	541.0	1.39	747A0937	8491
19	548.6	1.92	749A0937	11105
18	533.2	0.97	747A1128	8571
18	541.2	1.56	749A1128	11210
16	621.8	1.10	747A1037	9023
16	630.9	1.49	749A1037	11801
15	606.7	0.47	745A2228	6603
15	635.6	0.76	746A2228	7306
15	674.1	1.21	747A2228	9838
14	626.7	0.78	747A1228	9232
14	636.7	1.17	749A1228	12076
12	710.2	0.36	745A2328	7017
12	758.3	0.60	746A2328	7764
12	794.4	1.01	747A2328	10320
12	780.3	1.11	749A1137	12989
10	852.2	0.47	746A2428	8180
10	910.0	0.79	747A2428	10320
9	899.1	0.87	749A1237	13500
7	1097.8	0.58	747A2528	10320
7	1117.0	0.87	749A2528	13500
6	1275.9	0.45	747A2628	10320
6	1275.9	0.68	749A2628	13500

2.2 KW MOTOR

Nominal Output Rev/Min	Output Torque Nm	Service Factor	Unit Selection	Overhung Load N
379	50.5	2.58	745A0229	2210
379	51.1	4.12	746A0229	2446
284	66.6	2.18	745A0329	2433
284	66.6	3.53	746A0329	2692
190	98.4	1.88	745A0236	2785
190	99.5	2.92	746A0236	3081
190	99.5	5.55	747A0236	3893
189	96.6	1.56	745A0429	2785
189	97.7	2.77	746A0429	2785
143	129.8	1.51	745A0336	3065
143	131.2	2.37	746A0336	3391
143	131.2	4.56	747A0336	4285
142	125.8	1.28	745A0529	3065
142	128.7	2.02	746A0529	3391
125	147.5	1.46	745A0245	3227
125	149.2	2.28	746A0245	3570
125	149.2	4.36	747A0245	4511
114	153.5	0.98	745A0629	3302
114	157.2	1.60	746A0629	3653
95	188.0	1.07	745A0436	3509
95	190.2	1.90	746A0436	3882
95	190.2	3.45	747A0436	4905
95	177.6	0.96	745A0729	3509
95	182.0	1.71	746A0729	3882
94	192.2	1.20	745A0345	3551
94	194.5	1.91	746A0345	3929
94	196.7	3.63	747A0345	4965
71	247.7	1.44	746A0536	4273
71	250.7	2.57	747A0536	5399
71	227.9	0.73	745A0829	3862
71	233.8	1.18	746A0829	4273
71	242.7	2.09	747A0829	5399
63	274.9	0.86	745A0445	4065
63	281.6	1.50	746A0445	4498
63	285.0	2.67	747A0445	5684
57	302.3	1.13	746A0636	4603
57	309.6	2.20	747A0636	5816
57	273.7	0.55	745A0929	4160
57	281.1	0.95	746A0929	4603
57	292.2	1.70	747A0929	5816
48	345.0	1.19	746A0736	4891
48	349.4	2.08	747A0736	6181
48	353.9	2.94	749A0736	8084
47	328.5	0.75	746A1029	4891
47	341.8	1.33	747A1029	6181
47	362.1	1.08	746A0545	4951
47	371.0	1.96	747A0545	6256
38	441.4	0.84	746A0645	5333
38	452.6	1.68	747A0645	6739
36	460.0	1.46	747A0836	6803
36	460.0	2.29	749A0836	8897
36	426.1	0.94	747A1129	6803
36	432.0	1.37	749A1129	8897
31	502.9	0.92	746A0745	5667
31	509.6	1.65	747A0745	7161
31	523.0	2.24	749A0745	9366
29	552.9	1.20	747A0936	7328
29	552.9	1.78	749A0936	9584
28	510.5	0.73	747A1229	7328
28	517.9	1.01	749A1229	9584
24	636.9	0.97	747A1036	7787
24	636.9	1.42	749A1036	10185
24	661.6	1.15	747A0845	7882
24	670.5	1.65	749A0845	10309
19	793.5	0.95	747A0945	8491
19	804.6	1.31	749A0945	11105
18	802.1	1.05	749A1136	11210
16	911.9	0.75	747A1045	9023
16	925.3	1.02	749A1045	11801
14	943.6	0.79	749A1236	12076
12	1144.4	0.76	749A1145	12989
9	1318.7	0.60	749A1245	13500

Series W Gearboxes : Motorised selection

3.0 KW MOTOR

Nominal Output Rev/Min	Output Torque Nm	Service Factor	Unit Selection	Overhung Load N
384	67.9	1.92	745A0239	2210
384	68.7	3.06	746A0239	2446
384	68.7	5.69	747A0239	3090
288	89.5	1.62	745A0339	2433
288	89.5	2.63	746A0339	2692
288	90.5	4.83	747A0339	3401
192	129.8	1.16	745A0439	2785
192	131.3	2.06	746A0439	2785
192	132.8	3.69	747A0439	3893
189	134.7	1.38	745A0238	2785
189	136.2	2.13	746A0238	3081
189	136.2	4.06	747A0238	3893
144	173.1	1.51	746A0539	3391
144	175.1	2.76	747A0539	4285
142	177.6	1.10	745A0338	3065
142	179.6	1.73	746A0338	3391
142	179.6	3.34	747A0338	4285
128	199.2	3.27	747A0253	4511
128	201.5	4.37	749A0253	5901
115	211.4	1.19	746A0639	3653
115	216.4	2.34	747A0639	4816
96	244.7	1.27	746A0739	3882
96	247.7	2.23	747A0739	4905
96	262.6	2.72	747A0353	4965
96	250.7	3.08	749A0739	6416
96	262.6	3.66	749A0353	6494
95	257.3	0.78	745A0438	3509
95	260.3	1.39	746A0438	3882
95	260.3	2.53	747A0438	4905
72	326.3	1.56	747A0839	5399
72	326.3	2.24	749A0839	7062
71	339.0	1.05	746A0538	4273
71	343.0	1.88	747A0538	5399
64	380.5	2.00	747A0453	5684
64	380.5	2.79	749A0453	7434
58	393.0	1.26	747A0939	5816
58	397.9	1.76	749A0939	7607
57	413.6	0.83	746A0638	4603
57	423.7	1.61	747A0638	5816
48	459.6	0.99	747A1039	6181
48	465.6	1.38	749A1039	8084
48	495.4	1.47	747A0553	6256
48	501.4	2.08	749A0553	8182
47	472.1	0.87	746A0738	4891
47	478.2	1.52	747A0738	6181
47	484.2	2.15	749A0738	8084
38	611.8	1.72	749A0653	8814
36	581.0	1.02	749A1139	8897
36	629.5	1.07	747A0838	6803
36	629.5	1.67	749A0838	8897
32	698.4	1.68	749A0753	9366
29	696.4	0.75	749A1239	9584
28	756.6	0.88	747A0938	7328
28	756.6	1.30	749A0938	9584
24	895.3	1.23	749A0853	10309
24	871.6	0.71	747A1038	7787
24	871.6	1.04	749A1038	10185
18	1097.6	0.77	749A1138	11210
14	1291.3	0.58	749A1238	12076

4.0 KW MOTOR

Nominal Output Rev/Min	Output Torque Nm	Service Factor	Unit Selection	Overhung Load N
383	90.9	1.44	745A0244	2210
383	91.8	2.29	746A0244	2446
383	91.8	4.25	747A0244	3090
287	119.8	1.22	745A0344	2433
287	119.8	1.97	746A0344	2692
287	121.1	3.61	747A0344	3401
192	177.1	1.05	745A0246	2785
192	179.1	1.62	746A0246	3081
192	179.1	3.09	747A0246	3893
191	173.7	0.87	745A0444	2785
191	175.7	1.54	746A0444	2785
191	177.7	2.76	747A0444	3893
144	233.5	0.84	745A0346	3065
144	236.1	1.32	746A0346	3391
144	236.1	2.54	747A0346	4285
144	231.6	1.13	746A0544	3391
144	234.3	2.07	747A0544	4285
128	265.6	2.45	747A0255	4511
128	268.6	3.28	749A0255	5901
115	282.8	0.89	746A0644	3653
115	289.5	1.75	747A0644	4816
96	338.2	0.60	745A0446	3509
96	342.2	1.06	746A0446	3882
96	342.2	1.92	747A0446	4905
96	350.2	2.04	747A0355	4965
96	350.2	2.75	749A0355	6494
96	327.4	0.95	746A0744	3882
96	331.4	1.67	747A0744	4905
96	335.4	2.30	749A0744	6416
72	445.7	0.80	746A0546	4273
72	451.0	1.43	747A0546	5399
72	436.6	1.16	747A0844	5399
72	436.6	1.68	749A0844	7062
64	507.4	1.50	747A0455	5684
64	507.4	2.09	749A0455	7434
58	543.8	0.63	746A0646	4603
58	557.1	1.22	747A0646	5816
57	525.8	0.95	747A0944	5816
57	532.4	1.32	749A0944	7607
48	620.8	0.67	746A0746	4891
48	660.6	1.10	747A0555	6256
48	628.7	1.16	747A0746	6181
48	668.5	1.56	749A0555	8182
48	636.7	1.64	749A0746	8084
48	614.9	0.74	747A1044	6181
48	622.9	1.03	749A1044	8084
38	815.7	1.29	749A0655	8814
36	827.7	0.82	747A0846	6803
36	827.7	1.27	749A0846	8897
36	777.3	0.76	749A1144	8897
32	931.1	1.26	749A0755	9366
29	994.8	0.67	747A0946	7328
29	994.8	0.99	749A0946	9584
29	931.7	0.56	749A1244	9584
24	1146.0	0.54	747A1046	7787
24	1146.0	0.79	749A1046	10185
24	1193.8	0.93	749A0855	10309
18	1443.1	0.59	749A1146	11210
14	1697.8	0.44	749A1246	12076

5.5 KW MOTOR

Nominal Output Rev/Min	Output Torque Nm	Service Factor	Unit Selection	Overhung Load N
388	124.6	3.14	747A0252	3090
388	124.6	4.18	749A0252	4042
291	164.3	2.67	747A0352	3401
291	164.3	3.54	749A0352	4449
195	242.8	2.28	747A0254	3893
195	245.5	3.06	749A0254	5092
194	241.0	2.03	747A0452	3893
194	241.0	2.79	749A0452	5092
146	320.2	1.87	747A0354	4285
146	320.2	2.57	749A0354	5605
146	317.7	1.53	747A0552	4285
146	317.7	2.08	749A0552	5605
128	365.2	1.78	747A0257	4511
128	369.3	2.39	749A0257	5901
116	392.6	1.71	749A0652	6038
97	464.1	1.42	747A0454	4905
97	469.5	1.96	749A0454	6416
97	454.9	1.70	749A0752	6416
96	481.5	1.49	747A0357	4965
96	481.5	2.00	749A0357	6494
73	611.6	1.06	747A0554	5399
73	618.8	1.48	749A0554	7062
73	592.0	1.24	749A0852	7062
64	697.6	1.09	747A0457	5684
64	697.6	1.52	749A0457	7434
58	755.5	1.24	749A0654	7607
49	863.4	1.21	749A0754	8084
48	908.3	0.80	747A0557	6256
48	919.2	1.14	749A0557	8182
38	1121.6	0.94	749A0657	8814
37	1122.5	0.94	749A0854	8897
32	1280.3	0.92	749A0757	9366
24	1641.4	0.68	749A0857	10309

7.5 KW MOTOR

Nominal Output Rev/Min	Output Torque Nm	Service Factor	Unit Selection	Overhung Load N
388	169.8	2.30	747A0258	3090
388	169.8	3.07	749A0258	4042
291	224.0	1.96	747A0358	3401
291	224.0	2.59	749A0358	4449
194	328.6	1.49	747A0458	3893
194	332.3	1.67	747A0256	3893
194	328.6	2.04	749A0458	5092
194	336.0	2.24	749A0256	5092
146	433.2	1.12	747A0558	4285
146	438.1	1.37	747A0356	4285
146	433.2	1.53	749A0558	5605
146	438.1	1.88	749A0356	5605
116	535.4	1.26	749A0658	6038
97	635.0	1.04	747A0456	4905
97	620.3	1.25	749A0758	6416
97	642.4	1.44	749A0456	6416
73	836.9	0.77	747A0556	5399
73	807.3	0.91	749A0858	7062
73	846.7	1.08	749A0556	7062
58	1033.8	0.90	749A0656	7607
49	1181.5	0.89	749A0756	8084
36	1535.9	0.69	749A0856	8897

Series W Gearboxes : Dimensions motorised

TRIPLE REDUCTION

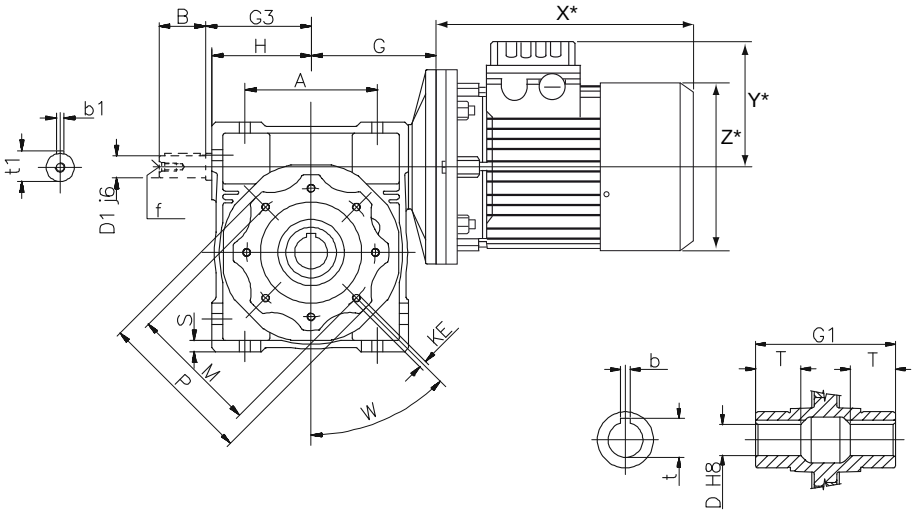

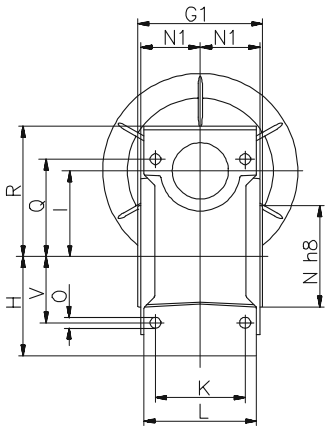

*for motor dimensions see page 314

Dimension (mm)	Unit Size								
	740	741	742	743	744	745	746	747	749
A	45	54	70	80	100	120	140	170	200
B	-	20	23	30	40	50	50	60	80
D†	11	14	18 (19)	25 (24)	25 (28)	28 (35)	35 (38)	42	45
D1	-	9	11	14	19	24	24	28	30
G	45	55	70	80	95	112.5	129.5	160	180
G1	50	63	78	92	112	120	140	155	170
G3	-	45	53	64	75	90	108	135	155
H	35	40	50	60	72	86	103	127.5	147.5
I	25	30	40	50	63	75	90	110	130
K	34	44	60	70	85	90	100	115	120
KE**	6.5 (3)	M6x11 (4)	M6x10 (4)	M8x10 (4)	M8x14(8)	M8x14(8)	M10x18(8)	M10x18(8)	M12x21(8)
L	42	56	71	85	103	112	130	144	155
M	55	65	75	85	95	115	130	165	215
N (h8)	45	55	60	70	80	95	110	130	180
N1	22.5	29.0	36.5	43.5	53.0	57.0	67.0	74.0	81.0
O	6.0	6.5	6.5	8.5	8.5	11.5	13.0	14.0	16.0
P	-	75	87	100	110	140	160	200	250
Q	35.5	44	55	64	80	93	102	125	140
R	48.0	57.0	71.5	84.0	102.0	119.0	135.0	167.5	187.5
S	5.0	5.5	6.5	7.0	8.0	10.0	11.0	16.0	15.5
T	16.0	21.0	26.0	30.0	36.0	40.0	45.0	50.0	60.0
V	22.5	27	35	40	50	60	70	85	100
W	100°	0°	45°	45°	45°	45°	45°	45°	45°
b†	4	5	6	8	8	8 (10)	10	12	14
t†	12.8	16.3	20.8 (21.8)	28.3 (27.3)	28.3 (31.3)	31.3 (38.3)	38.3 (41.3)	45.3	48.8
b1	-	3	4	5	6	8	8	8	8
t1	-	10.2	12.5	16.0	21.5	27.0	27.0	31.0	33.0
f	-	-	-	M6	M6	M8	M8	M10	M10
~kg	0.7	1.2	2.3	3.5	6.2	9.0	13.0	21.0	48.0

All dimensions in mm.
† Dimension in brackets are the alternative bore option.
** Number in brackets are the number of tapped holes with the exception of the size 740 where the holes are not tapped.
~kg refers to the approximate weight without motor.

Series W Gearboxes : Motor input dimensions

B5 FLANGE DIMENSIONS

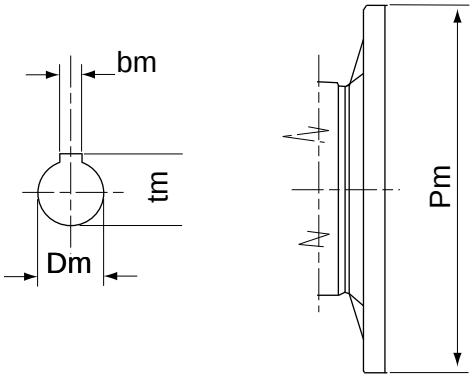

B5 Flange	IEC Motor Frame Size										
	56	63	71	80	90	100	112	132	160	180	200
Pm	120	140	160	200	200	250	250	300	350	350	400
Dm	9	11	14	19	24	28	28	38	42	48	55
bm	3	4	5	6	8	8	8	10	12	14	16
tm	10.4	12.8	16.3	21.8	27.3	31.3	31.3	41.3	45.3	51.8	59.3

* Size 749 Dimension tm is 40.3 (IEC 132)

B14 FLANGE DIMENSIONS

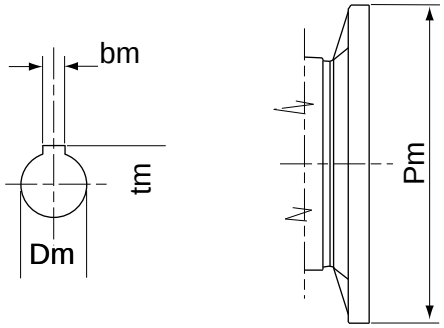

B14 Face	IEC Motor Frame Size										
	56	63	71	80	90	100	112	132	160	180	200
Pm	80	90	105	120	140	160	160	200	350	350	400
Dm	9	11	14	19	24	28	28	38	42	48	55
bm	3	4	5	6	8	8	8	10	12	14	16
tm	10.4	12.8	16.3	21.8	27.3	31.3	31.3	41.3	45.3	51.8	59.3

* Size 749 Dimension tm is 40.3 (IEC 132)

Series W Gearboxes : Output flange dimensions

TRIPLE REDUCTION

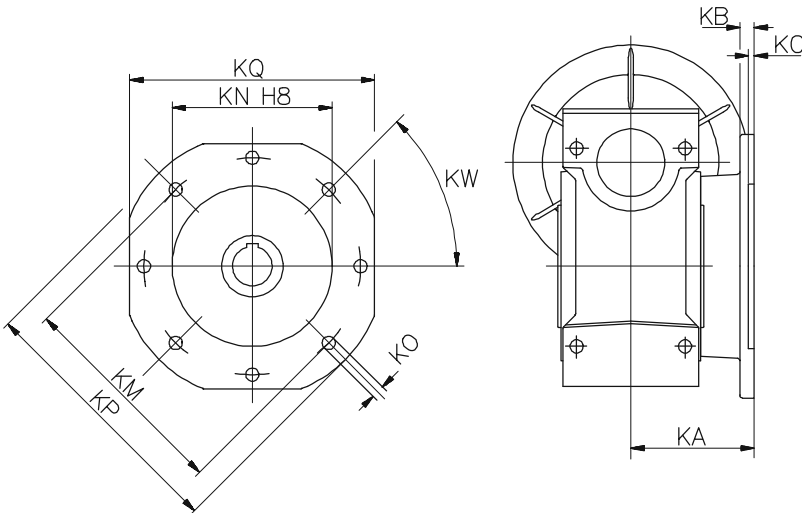

STANDARD OUTPUT FLANGE (Type FA)

Unit Size	KA	KB	KC	KM	KN	KO	KP	KQ	KW
740	45	6	3	55	40	6.5 (4)	75	70	45°
741	54.5	6	4	68	50	6.5 (4)	80	70	45°
742	67	7	4	80 min	60	9 (4)	110	95	45°
743	90	9	5	90 min	70	11 (4)	125	110	45°
744	82	10	6	150	115	11 (4)	180	142	45°
745	111	13	6	165	130	14 (4)	200	170	45°
746	111	13	6	175	152	14 (4)	210	200	45°
747	131	15	6	230	170	14 (8)	280	260	45°
749	140	15	6	255	180	16 (8)	320	290	22.5°

OUTPUT FLANGE (Type FB)

Unit Size	KA	KB	KC	KM	KN	KO	KP	KQ	KW
742	97	7	4	80 min	60	9 (4)	110	95	45°
743	120	9	5	90 min	70	11 (4)	125	110	45°
744	112	10	6	150	115	11 (4)	180	142	45°
745	90	13	6	130	110	14 (4)	160	-	45°
746	122	18	6	215	180	14 (4)	250	-	45°
747	180	15	6	230	170	14 (8)	280	260	45°

OUTPUT FLANGE (Type FC)

Unit Size	KA	KB	KC	KM	KN	KO	KP	KQ	KW
742	80	9	5	115	95	9.5 (4)	140	-	45°
743	89	10	5	130	110	9.5 (4)	160	-	45°
744	98	10	5	165	130	11 (4)	200	-	45°
745	-	-	-	-	-	-	-	-	-
746	110	17	6	165	130	11 (4)	200	-	45°

OUTPUT FLANGE (Type FD)

Unit Size	KA	KB	KC	KM	KN	KO	KP	KQ	KW
742	58	12	5	100	80	9 (4)	120	-	45°
743	72	14.5	5	115	95	11 (4)	140	-	45°
744	107	10	5	165	130	11 (4)	200	-	45°
745	-	-	-	-	-	-	-	-	-
746	151	13	6	175	152	14 (4)	210	-	45°

Series W Gearboxes : Accessories

OUTPUT SHAFTS

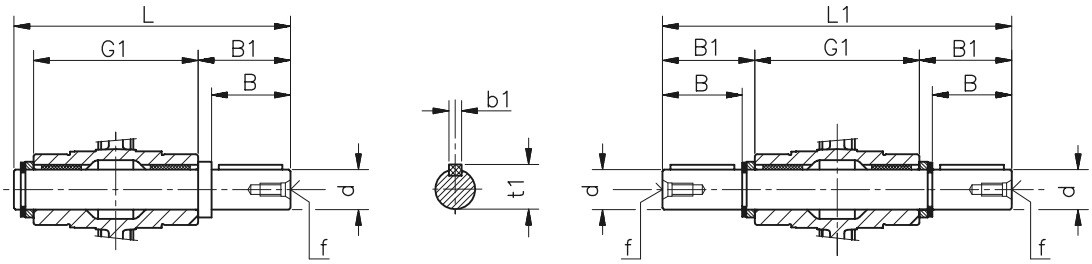

Single Extension

Double Extension

Unit Size	d h6	B	B1	G1	L	L1	f	b1	t1	Kg Single	kg Double
740*	11 g6	23	25.5	50	81	101	-	4	12.5	0.07	0.11
741	14	30	32.5	63	102	128	M6	5	16.0	0.14	0.16
742	18	40	43.0	78	128	164	M6	6	20,5	0.27	0.34
743	25	50	53.5	92	153	199	M10	8	28.0	0.60	0.75
744	25	50	53.5	112	173	219	M10	8	28.0	0.67	0.84
745	28	60	63.5	120	192	247	M10	8	31.0	0.94	1.20
746	35	80	84.5	140	234	309	M12	10	38.0	1.79	2.50
747	42	80	84.5	155	249	324	M16	12	45.0	2.70	3.44
749	45	80	85.0	170	265	340	M16	14	48.5	3.60	4.25

*Alternative small shaft available on request contact your local Authorised Distributor.
All dimensions in mm.

TORQUE ARM DIMENSIONS

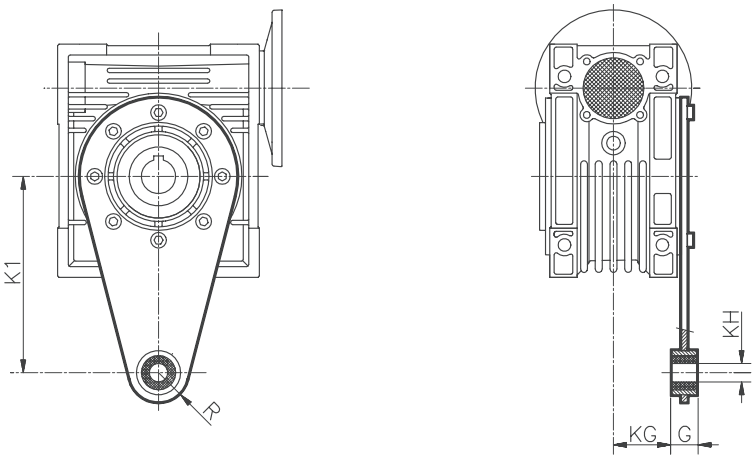

Unit Size	K1	G	KG	KH	R	kg
740	70	14	17.5	8	15	0.17
741	85	14	24.0	8	15	0.18
742	100	14	31.5	10	18	0.24
743	100	14	38.5	10	18	0.27
744	150	14	49.0	10	18	0.57
745	200	25	47.5	20	30	1.1
746	200	25	57.5	20	30	1.26
747	250	30	62.0	25	35	1.92
749	250	30	69.0	25	35	2.23

All dimensions in mm.
NOTE: Sizes 740 & 741 are not supplied with vibration resistant bushing

OUTPUT HUB DIMENSIONS

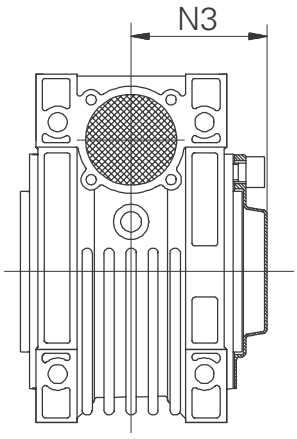

Unit Size	N3
741	42.0
742	50.0
743	57.5
744	68.5
745	73.5
746	85.5
747	94.0
748	94.0
749	102.0
750	117.0

Series W Gearboxes : Helical worm unit dimensions

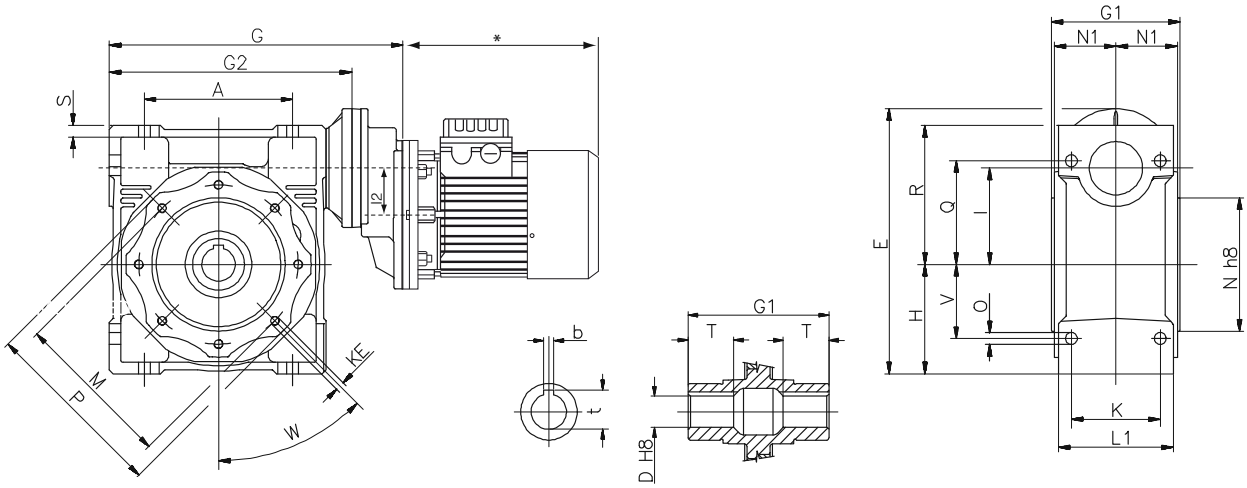

*for motor dimensions see page 314

IEC Motor	63 Frame			71 Frame				80 & 90 Frame			
Size	742	743	744	743	744	745	746	745	746	747	749
A	70	80	100	80	100	120	140	120	140	170	200
E	147.0	167.0	192.0	177.5	202.5	228.5	260.5	241.0	273.0	317.5	357.5
G	165	185	212	193	220	251.5	285.5	267.5	301.5	356.5	396.5
G1	78	92	112	92	112	120	140	120	140	155	170
G2	120.0	140.0	167.0	140.0	167.0	198.5	232.5	198.5	232.5	287.5	327.5
H	50.0	60.0	72.0	60.0	72.0	86.0	103.0	86.0	103.0	127.5	147.5
I	40	50	63	50	63	75	90	75	90	110	130
I2	40	40	40	50	50	50	50	63	63	63	63
L1	71	85	103	85	103	112	130	112	130	144	155
K	60	70	85	70	85	90	100	90	100	115	120
KE**	M6x10(4)	M8x10(4)	M8x14(8)	M8x10(4)	M8x14(8)	M8x14(8)	M10x18(8)	M8x14(8)	M10x18(8)	M10x18(8)	M12x21(8)
M	75	85	95	85	95	115	130	115	130	165	215
N	60	70	80	70	80	95	110	95	110	130	180
N1	36.5	43.5	53.0	43.5	53.0	57.0	67.0	57.0	67.0	74.0	81.0
O	6.5	8.5	8.5	8.5	8.5	11.5	13.0	11.5	13.0	14.0	16.0
P	87	100	110	100	110	140	160	140	160	200	250
Q	55	64	80	64	80	93	102	93	102	125	140
R	71.5	84.0	102.0	84.0	102.0	119.0	135.0	119.0	135.0	167.5	187.5
S	6.5	7.0	8.0	7.0	8.0	10.0	11.0	10.0	11.0	16.0	15.5
T	26	30	36	30	36	40	45	40	45	50	60
V	35	40	50	40	50	60	70	60	70	85	100
W	45°	45°	45°	45°	45°	45°	45°	45°	45°	45°	45°
D	18	25	25	25	25	28	35	28	35	42	45
b	6	8	8	8	8	8	10	8	10	12	14
t	20.8	28.3	28.3	28.3	28.3	31.3	38.3	31.3	38.3	45.3	48.8
~kg	3.4	4.6	7.3	5.1	7.8	10.6	14.6	12.4	16.4	24.4	51.4

All Dimesions in mm. For alternative hollow bore options see page 326 and the relevant motorised worm unit size.
The frame size of the electric motor fitted to a worm unit determines the helical gear part of the asembly, the relevant dimensions are given in the above table
Eg: Dimension G (the overall length) for a size 743 Helical Worm gearbox fitted with an IEC 71 Frame motor is 193mm.
** Number in brackets are the number of tapped holes.
~kg Refers to the approximate weight without motor. See page 314 for additional motor weight.

Series W Gearboxes : Non-motorised ratings : Input speed 500 rev/min

NON-MOTORISED RATINGS

Input speed 500 rev/min.

Unit Size	Ratio	Nominal Output Speed Rev/Min	Input Power kW	Output Torque Nm	Overhung Load Fr_1 N	Overhung Load Fr_2 N
741	5.0	100	0.30	24	210	841
	7.5	66.7	0.21	24	210	963
	10	50.0	0.16	24	210	1060
	15	33.3	0.12	24	210	1213
	20	25.0	0.09	23	210	1336
	25	20.0	0.10	29	210	1439
	30	16.7	0.08	26	210	1529
	40	12.5	0.06	23	210	1683
	50	10.0	0.05	21	210	1813
	60	8.3	0.04	19	210	1830
	80	6.3	0.03	17	210	1830
742	5	100	0.60	49	350	1619
	7.5	66.7	0.45	54	350	1853
	10	50.0	0.35	54	350	2040
	15	33.3	0.26	55	350	2335
	20	25.0	0.19	52	350	2570
	25	20.0	0.15	49	350	2769
	30	16.7	0.16	58	350	2942
	40	12.5	0.12	53	350	3238
	50	10.0	0.10	49	350	3488
	60	8.3	0.08	46	350	3490
	80	6.3	0.06	40	350	3490
	100	5.0	0.05	36	350	3490
743	5	100	1.1	92	490	2222
	7.5	66.7	0.86	103	490	2544
	10	50.0	0.67	103	490	2800
	15	33.3	0.47	103	490	3205
	20	25.0	0.33	93	490	3528
	25	20.0	0.28	91	490	3800
	30	16.7	0.29	108	490	4038
	40	12.5	0.22	98	490	4445
	50	10.0	0.17	91	490	4788
	60	8.3	0.14	83	490	4840
	80	6.3	0.11	75	490	4840
	100	5.0	0.09	65	490	4840
744	7.5	66.7	1.50	184	700	3325
	10	50.0	1.20	185	700	3660
	15	33.3	0.85	187	700	4190
	20	25.0	0.63	178	700	4611
	25	20.0	0.48	164	700	4967
	30	16.7	0.54	200	700	5279
	40	12.5	0.40	185	700	5810
	50	10.0	0.32	173	700	6259
	60	8.3	0.26	160	700	6270
	80	6.3	0.19	137	700	6270
	100	5.0	0.16	128	700	6270
745	7.5	66.7	2.10	260	980	3925
	10	50.0	1.70	270	980	4320
	15	33.3	1.20	280	980	4945
	20	25.0	0.98	285	980	5443
	25	20.0	0.73	255	980	5863
	30	16.7	0.77	300	980	6231
	40	12.5	0.58	280	980	6858
	50	10.0	0.44	250	980	7380
	60	8.3	0.37	240	980	7380
	80	6.3	0.29	215	980	7380
	100	5.0	0.24	210	980	7380

Unit Size	Ratio	Nominal Output Speed Rev/Min	Input Power kW	Output Torque Nm	Overhung Load Fr_1 N	Overhung Load Fr_2 N
746	7.5	66.7	3.30	410	1270	4343
	10	50.0	2.70	435	1270	4780
	15	33.3	2.10	490	1270	5472
	20	25.0	1.60	470	1270	6022
	25	20.0	1.20	440	1270	6487
	30	16.7	1.40	550	1270	6894
	40	12.5	0.95	480	1270	7588
	50	10.0	0.75	450	1270	8174
	60	8.3	0.59	400	1270	8180
	80	6.3	0.45	365	1270	8180
	100	5.0	0.35	330	1270	8180
747	7.5	66.7	5.50	690	1700	5488
	10	50.0	4.60	740	1700	6040
	15	33.3	3.40	790	1700	6914
	20	25.0	2.50	750	1700	7610
	25	20.0	2.10	790	1700	8198
	30	16.7	2.10	870	1700	8711
	40	12.5	1.50	810	1700	9588
	50	10.0	1.30	800	1700	10320
	60	8.3	0.98	710	1700	10320
	80	6.3	0.72	630	1700	10320
	100	5.0	0.56	570	1700	10320
749	7.5	66.7	8.60	1080	2100	7178
	10	50.0	7.10	1160	2100	7900
	15	33.3	5.50	1300	2100	9043
	20	25.0	4.00	1230	2100	9953
	25	20.0	3.20	1200	2100	10722
	30	16.7	3.30	1400	2100	11394
	40	12.5	2.40	1300	2100	12540
	50	10.0	1.90	1220	2100	13500
	60	8.3	1.50	1070	2100	13500
	80	6.3	1.10	970	2100	13500
	100	5.0	0.85	860	2100	13500

Series W Gearboxes : Non-motorised ratings : Input speed 900 rev/min

NON-MOTORISED RATINGS

Input speed 900 rev/min.

Unit Size	Ratio	Nominal Output Speed Rev/Min	Input Power kW	Output Torque Nm	Overhung Load Fr_1 N	Overhung Load Fr_2 N
741	5	180	0.44	20	175	692
	7.5	120	0.30	20	175	792
	10	90.0	0.24	20	197	871
	15	60.0	0.17	20	197	997
	20	45.0	0.13	20	210	1098
	25	36.0	0.14	23	210	1183
	30	30.0	0.11	21	210	1257
	40	22.5	0.09	20	210	1383
	50	18.0	0.07	18	210	1490
	60	15.0	0.06	17	210	1583
	80	11.3	0.04	15	210	1743
742	5	180	0.87	40	290	1331
	7.5	120	0.65	44	319	1524
	10	90.0	0.50	44	350	1677
	15	60.0	0.36	45	350	1920
	20	45.0	0.28	44	350	2113
	25	36.0	0.23	43	350	2276
	30	30.0	0.23	49	350	2419
	40	22.5	0.17	45	350	2662
	50	18.0	0.14	42	350	2868
	60	15.0	0.11	39	350	3047
	80	11.3	0.09	35	350	3354
	100	9.0	0.07	32	350	3490
743	5	180	1.60	75	400	1827
	7.5	120	1.20	84	448	2091
	10	90.0	0.94	84	490	2302
	15	60.0	0.67	84	490	2635
	20	45.0	0.48	77	490	2900
	25	36.0	0.39	75	490	3124
	30	30.0	0.42	90	490	3320
	40	22.5	0.31	82	490	3654
	50	18.0	0.25	77	490	3936
	60	15.0	0.21	72	490	4183
	80	11.3	0.16	68	490	4604
	100	9.0	0.12	56	490	4840
744	7.5	120	2.20	151	580	2734
	10	90.0	1.70	153	661	3009
	15	60.0	1.20	155	670	3444
	20	45.0	0.91	148	700	3791
	25	36.0	0.69	137	700	4084
	30	30.0	0.79	175	700	4339
	40	22.5	0.58	160	700	4776
	50	18.0	0.45	145	700	5145
	60	15.0	0.37	138	700	5467
	80	11.3	0.29	128	700	6018
	100	9.0	0.25	124	700	6270
745	7.5	120	3.10	215	810	3227
	10	90.0	2.50	230	975	3551
	15	60.0	1.80	235	980	4065
	20	45.0	1.40	235	980	4474
	25	36.0	1.10	215	980	4820
	30	30.0	1.10	260	980	5122
	40	22.5	0.83	240	980	5637
	50	18.0	0.65	220	980	6073
	60	15.0	0.54	210	980	6453
	80	11.3	0.43	200	980	7103
	100	9.0	0.36	190	980	7380

Unit Size	Ratio	Nominal Output Speed Rev/Min	Input Power kW	Output Torque Nm	Overhung Load Fr_1 N	Overhung Load Fr_2 N
746	7.5	120	4.8	340	1040	3570
	10	90.0	4.0	370	1270	3929
	15	60.0	3.1	420	1270	4498
	20	45.0	2.3	390	1270	4951
	25	36.0	1.8	370	1270	5333
	30	30.0	1.9	460	1270	5667
	40	22.5	1.4	410	1270	6238
	50	18.0	1.1	390	1270	6719
	60	15.0	0.86	350	1270	7140
	80	11.3	0.63	315	1270	7859
	100	9.0	0.49	280	1270	8180
747	7.5	120	8.0	565	1390	4511
	10	90.0	6.6	620	1700	4965
	15	60.0	4.9	660	1700	5684
	20	45.0	3.6	630	1700	6256
	25	36.0	3.1	660	1700	6739
	30	30.0	3.0	730	1700	7161
	40	22.5	2.2	690	1700	7882
	50	18.0	1.8	680	1700	8491
	60	15.0	1.4	620	1700	9023
	80	11.3	1.0	540	1700	9931
	100	9.0	0.8	490	1700	10320
749	7.5	120	12.3	880	1740	5901
	10	90.0	10.3	960	2100	6494
	15	60.0	7.8	1060	2100	7434
	20	45.0	5.8	1040	2100	8182
	25	36.0	4.8	1050	2100	8814
	30	30.0	4.7	1170	2100	9366
	40	22.5	3.5	1100	2100	10309
	50	18.0	2.7	1050	2100	11105
	60	15.0	2.1	940	2100	11801
	80	11.3	1.6	860	2100	12989
	100	9.0	1.2	780	2100	13500

Series W Gearboxes : Non-motorised ratings : Input speed 1400 rev/min

NON MOTORISED RATINGS

Input speed 1400 rev/min.

Unit Size	Ratio	Nominal Output Speed Rev/Min	Input Power kW	Output Torque Nm	Overhung Load Fr_1 N	Overhung Load Fr_2 N
741	5	280.0	0.61	18	150	597
	7.5	186.7	0.41	18	150	683
	10	140.0	0.32	18	169	752
	15	93.3	0.23	18	169	861
	20	70.0	0.18	18	190	948
	25	56.0	0.18	21	210	1021
	30	46.7	0.15	20	210	1085
	40	35.0	0.11	18	210	1194
	50	28.0	0.09	17	210	1286
	60	23.3	0.08	16	210	1367
	80	17.5	0.05	13	210	1504
742	5	280.0	1.10	34	250	1149
	7.5	186.7	0.90	40	294	1315
	10	140.0	0.69	40	331	1447
	15	93.3	0.48	40	331	1657
	20	70.0	0.37	39	350	1824
	25	56.0	0.30	38	350	1964
	25	56.0	0.30	38	350	1964
	30	46.7	0.31	45	350	2087
	40	35.0	0.23	41	350	2298
	50	28.0	0.18	39	350	2475
	60	23.3	0.15	36	350	2630
	80	17.5	0.12	33	350	2895
	100	14.0	0.09	29	350	3118
743	5	280.0	2.00	62	350	1577
	7.5	186.7	1.60	71	401	1805
	10	140.0	1.20	72	490	1987
	15	93.3	0.88	74	490	2274
	20	70.0	0.68	73	490	2503
	25	56.0	0.54	70	490	2696
	30	46.7	0.57	84	490	2865
	40	35.0	0.42	76	490	3153
	50	28.0	0.34	73	490	3397
	60	23.3	0.28	68	490	3610
	80	17.5	0.22	65	490	3973
	100	14.0	0.16	55	490	4280
744	7.5	186.7	2.80	128	500	2359
	10	140.0	2.20	130	571	2597
	15	93.3	1.60	140	615	2973
	20	70.0	1.20	135	667	3272
	25	56.0	1.00	130	700	3524
	30	46.7	1.10	160	700	3745
	40	35.0	0.76	145	700	4122
	50	28.0	0.6	135	700	4440
	60	23.3	0.51	130	700	4719
	80	17.5	0.39	122	700	5193
	100	14.0	0.34	118	700	5595
745	7.5	186.7	4.10	185	700	2785
	10	140.0	3.20	195	830	3065
	15	93.3	2.30	200	851	3509
	20	70.0	1.90	210	980	3862
	25	56.0	1.50	200	980	4160
	30	46.7	1.50	230	980	4421
	40	35.0	1.10	220	980	4865
	50	28.0	0.89	210	980	5241
	60	23.3	0.75	200	980	5569
	80	17.5	0.58	190	980	6130
	100	14.0	0.48	180	980	6603

Unit Size	Ratio	Nominal Output Speed Rev/Min	Input Power kW	Output Torque Nm	Overhung Load Fr_1 N	Overhung Load Fr_2 N
746	7.5	186.7	6.3	290	900	3081
	10	140.0	5.1	310	1082	3391
	15	93.3	4.1	360	1257	3882
	20	70.0	3.1	355	1270	4273
	25	56.0	2.4	340	1270	4603
	30	46.7	2.6	410	1270	4891
	40	35.0	1.8	360	1270	5383
	50	28.0	1.4	340	1270	5799
	60	23.3	1.1	320	1270	6163
	80	17.5	0.83	285	1270	6783
	100	14.0	0.67	270	1270	7306
747	7.5	186.7	10.4	480	1200	3893
	10	140.0	8.6	520	1463	4285
	15	93.3	6.5	570	1603	4905
	20	70.0	4.8	560	1700	5399
	25	56.0	4.1	590	1700	5816
	30	46.7	3.9	630	1700	6181
	40	35.0	2.9	610	1700	6803
	50	28.0	2.3	600	1700	7328
	60	23.3	1.9	560	1700	7787
	80	17.5	1.3	490	1700	8571
	100	14.0	1.1	460	1700	9232
749	7.5	186.7	16.1	750	1500	5092
	10	140.0	13.5	820	1845	5605
	15	93.3	10.3	920	2070	6416
	20	70.0	7.8	910	2100	7062
	25	56.0	6.5	930	2100	7607
	30	46.7	6.4	1040	2100	8084
	40	35.0	4.9	1050	2100	8897
	50	28.0	3.8	980	2100	9584
	60	23.3	3.1	900	2100	10185
	80	17.5	2.3	840	2100	11210
	100	14.0	1.7	740	2100	12076

Series W Gearboxes : Non-motorised ratings : Input speed 1280 rev/min

NON MOTORISED RATINGS

Input speed 2800 rev/min.

Unit Size	Ratio	Nominal Output Speed Rev/Min	Input Power kW	Output Torque Nm	Overhung Load Fr_1 N	Overhung Load Fr_2 N
741	5	560.0	0.79	12	115	474
	7.5	373.3	0.58	13	125	542
	10	280.0	0.45	13	140	597
	15	186.7	0.31	13	140	683
	20	140.0	0.23	12	146	752
	25	112.0	0.25	16	210	810
	30	93.3	0.21	15	210	861
	40	70.0	0.16	14	127	948
	50	56.0	0.12	13	128	1021
	60	46.7	0.10	12	126	1085
	80	35.0	0.08	11	130	1194
742	5	560.0	1.6	24	200	912
	7.5	373.3	1.2	28	233	1044
	10	280.0	1.0	29	272	1149
	15	186.7	0.72	31	291	1315
	20	140.0	0.52	29	204	1447
	25	112.0	0.42	28	236	1559
	30	93.3	0.44	34	350	1657
	40	70.0	0.32	31	350	1824
	50	56.0	0.26	30	350	1964
	60	46.7	0.21	28	350	2087
	80	35.0	0.16	25	350	2298
	100	28.0	0.12	23	350	2475
743	5	560.0	2.9	45	280	1251
	7.5	373.3	2.3	52	324	1433
	10	280.0	1.8	54	378	1577
	15	186.7	1.3	57	399	1805
	20	140.0	0.95	53	417	1987
	25	112.0	0.75	51	482	2140
	30	93.3	0.82	64	490	2274
	40	70.0	0.59	59	490	2503
	50	56.0	0.45	53	490	2696
	60	46.7	0.37	50	490	2865
	80	35.0	0.27	45	490	3153
	100	28.0	0.21	40	490	3397
744	7.5	373.3	4.0	93	395	1873
	10	280.0	3.2	97	463	2061
	15	186.7	2.3	103	492	2359
	20	140.0	1.7	100	538	2597
	25	112.0	1.3	92	593	2797
	30	93.3	1.5	120	700	2973
	40	70.0	1.1	108	700	3272
	50	56.0	0.83	100	700	3524
	60	46.7	0.68	95	700	3745
	80	35.0	0.49	85	700	4122
	100	28.0	0.37	74	700	4440
745	7.5	373.3	5.6	130	560	2210
	10	280.0	4.7	145	703	2433
	15	186.7	3.4	150	727	2785
	20	140.0	2.8	160	872	3065
	25	112.0	2.1	150	980	3302
	30	93.3	2.1	170	980	3509
	40	70.0	1.6	165	980	3862
	50	56.0	1.2	150	980	4160
	60	46.7	1.0	145	980	4421
	80	35.0	0.72	130	980	4865
	100	28.0	0.58	120	980	5241

Unit Size	Ratio	Nominal Output Speed Rev/Min	Input Power kW	Output Torque Nm	Overhung Load Fr_1 N	Overhung Load Fr_2 N
746	7.5	373.3	8.9	210	715	2446
	10	280.0	7.7	235	900	2692
	15	186.7	6.0	270	1034	3081
	20	140.0	4.4	260	1120	3391
	25	112.0	3.4	250	1270	3653
	30	93.3	3.7	310	1270	3882
	40	70.0	2.6	275	1270	4273
	50	56.0	2.0	265	1270	4603
	60	46.7	1.6	245	1270	4891
	80	35.0	1.2	225	1270	5383
	100	28.0	0.9	200	1270	5799
747	7.5	373.3	14.4	340	950	3090
	10	280.0	12.2	380	1194	3401
	15	186.7	9.3	425	1336	3893
	20	140.0	7.0	420	1485	4285
	25	112.0	5.9	440	1700	4616
	30	93.3	5.7	480	1700	4905
	40	70.0	4.1	460	1700	5399
	50	56.0	3.3	450	1700	5816
	60	46.7	2.7	430	1700	6181
	80	35.0	1.9	380	1700	6803
	100	28.0	1.5	350	1700	7328
749	7.5	373.3	22.1	520	1190	4042
	10	280.0	18.7	580	1493	4449
	15	186.7	14.7	670	1725	5092
	20	140.0	11.0	660	1912	5605
	25	112.0	9.0	670	2100	6038
	30	93.3	9.0	770	2100	6416
	40	70.0	6.5	730	2100	7062
	50	56.0	5.1	700	2100	7607
	60	46.7	4.0	640	2100	8084
	80	35.0	3.0	590	2100	8897
	100	28.0	2.2	520	2100	9584

Series W Gearboxes : Worm reducer dimensions

SHAFT MOUNTED WORM REDUCER

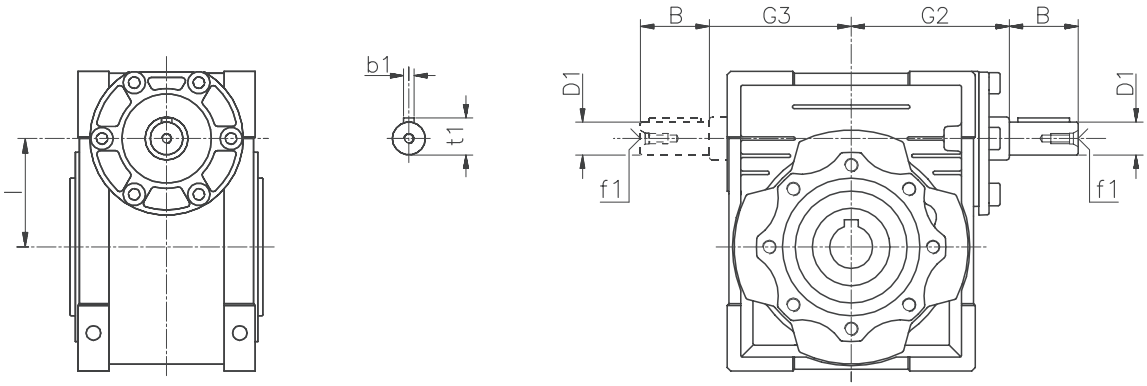

Unit Size	B	D1 j6	G2	G3	l	b1	f1	t1	kg
741	20	9	51	45	30	3	-	10.2	1.2
742	23	11	60	53	40	4	-	12.5	2.3
743	30	14	74	64	50	5	M6	16.0	3.5
744	40	19	90	75	63	6	M6	21.5	6.2
745	50	24	105	90	75	8	M8	27.0	9.0
746	50	24	125	108	90	8	M8	27.0	13.0
747	60	28	142	135	110	8	M10	31.0	21.0
749	80	30	162	155	130	8	M10	33.0	48.0
750	80	35	195	175	150	10	M12	38.0	84.0

For all other dimensions consult page 326.

Series W Gearboxes : Mesh data

MESH DATA

Unit Size		Ratio											
		5	7.5	10	15	20	25	30	40	50	60	80	100
740	Z1	6	4	3	2	2	-	1	1	1	1	-	-
	γ	35°02′	25°03′	19°19′	13°09′	10°41′	-	6°40′	5°23′	4°31′	3°53′	-	-
	Mx	1.30	1.30	1.30	1.30	0.995	-	1.30	0.995	0.80	0.67	-	-
	ηd(1400)	0.87	0.85	0.83	0.79	0.75	-	0.67	0.62	0.58	0.55	-	-
	ηs	0.72	0.71	0.68	0.61	0.56	-	0.46	0.41	0.36	0.34	-	-
741	Z1	6	4	3	2	2	1	1	1	1	1	1	-
	γ	27°04′	18°49′	14°20′	9°40′	7°42′	5°35′	4°52′	3°52′	3°12′	2°45′	2°07′	-
	Mx	1.44	1.44	1.44	1.44	1.09	1.70	1.44	1.09	0.89	0.74	0.56	-
	ηd(1400)	0.87	0.85	0.82	0.77	0.73	0.68	0.65	0.59	0.55	0.51	0.44	-
	ηs	0.72	0.67	0.63	0.55	0.50	0.43	0.39	0.35	0.31	0.27	0.23	-
742	Z1	6	4	3	2	2	2	1	1	1	1	1	1
	γ	34°19′	24°28′	18°51′	12°49′	10°23′	8°43′	6°29′	5°14′	4°23′	3°47′	2°57′	2°25′
	Mx	2.06	2.06	2.06	2.06	1.57	1.27	2.06	1.57	1.27	1.06	0.81	0.65
	ηd(1400)	0.89	0.87	0.85	0.82	0.78	0.75	0.70	0.65	0.62	0.58	0.52	0.47
	ηs	0.74	0.71	0.67	0.60	0.55	0.51	0.45	0.40	0.36	0.32	0.28	0.24
743	Z1	6	4	3	2	2	2	1	1	1	1	1	1
	γ	33°37′	23°54′	18°23′	12°30′	10°06′	8°29′	6°19′	5°06′	4°16′	3°40′	2°52′	2°21′
	Mx	2.56	2.56	2.56	2.56	1.95	1.58	2.56	1.95	1.58	1.32	1.00	0.8
	ηd(1400)	0.89	0.88	0.86	0.82	0.79	0.76	0.72	0.67	0.63	0.59	0.53	0.49
	ηs	0.74	0.70	0.66	0.59	0.55	0.51	0.44	0.39	0.35	0.32	0.27	0.23
744	Z1	-	4	3	2	2	2	1	1	1	1	1	1
	γ	-	24°31′	18°53′	12°51′	10°25′	8°45′	6°30′	5°15′	4°24′	3°47′	2°58′	2°26′
	Mx	-	3.25	3.25	3.25	2.48	2.00	3.25	2.48	2.0	1.68	1.27	1.02
	ηd(1400)	-	0.88	0.87	0.83	0.81	0.78	0.74	0.70	0.66	062	0.57	0.51
	ηs	-	0.71	0.67	0.60	0.55	0.51	045	0.40	0.36	0.33	0.28	0.24
745	Z1	-	4	3	2	2	2	1	1	1	1	1	1
	γ	-	26°17′	20°20′	13°52′	11°18′	9°32′	7°02′	5°42′	4°48′	4°08′	3°14′	2°40′
	Mx	-	3.94	3.94	3.94	3.00	2.42	3.94	3.0	2.42	2.03	1.54	1.24
	ηd(1400)	-	0.89	0.88	0.85	0.82	0.80	0.76	0.72	0.69	0.65	0.60	0.55
	ηs	-	0.71	0.68	0.61	0.57	0.53	0.46	0.42	0.38	0.35	0.29	0.26
746	Z1	-	4	3	2	2	2	1	1	1	1	1	1
	γ	-	29°11′	22°44′	15°36′	12°50′	10°54′	7°57′	6°30′	5°30′	4°46′	3°45′	3°06′
	Mx	-	4.84	4.84	4.84	3.69	2.98	4.84	3.69	2.98	2.50	1.89	1.52
	ηd(1400)	-	0.90	0.89	0.86	0.84	0.82	0.78	0.75	0.72	0.69	0.63	0.59
	ηs	-	0.73	0.70	0.64	0.60	0.56	0.49	0.45	0.41	0.38	0.32	0.28
747	Z1	-	4	3	2	2	2	1	1	1	1	1	1
	γ	-	28°15′	21°57′	15°02′	14°41′	12°34′	7°39′	7°28′	6°22′	5°32′	4°24′	3°39′
	Mx	-	5.875	5.875	5.875	4.62	3.73	5.875	4.62	3.73	3.13	2.37	1,91
	ηd(1400)	-	0.90	0.89	0.86	0.85	0.84	0.79	0.78	0.75	0.72	0.67	0,63
	ηs	-	0.72	0.69	0.63	0.62	0.59	0.48	0.48	0.44	0.41	0.36	0,32
749	Z1	-	4	3	2	2	2	1	1	1	1	1	1
	γ	-	28°41′	22°19′	15°18′	13°52′	11°49′	7°47′	7°02′	5°58′	5°11′	4°07′	3°24′
	Mx	-	6.97	6.97	6.97	5.4	4.37	6.97	5.4	4.37	3.67	2.77	2.23
	ηd(1400)	-	0.91	0.89	0.87	0.86	0.84	0.80	0.78	0.75	0.72	0.68	0.64
	ηs	-	0.72	0.69	0.63	0.61	0.58	0.49	0.46	0.43	0.39	0.34	0.30

EFFICIENCY

Efficiency is a parameter which has a major influence on the sizing of certain applications, and basically depends on gear pair design elements.

The mesh data table above shows dynamic efficiency (n1=1400) and static efficiency values. Remember that these values are only achieved after the unit has been run in.

DYNAMIC IRREVERSIBILITY

Dynamic irreversibility is achieved when the output shaft stops instantly when drive is no longer transmitted through the worm shaft. This condition requires a dynamic efficiency of $\eta_d < 0.5$ (see table above).

STATIC IRREVERSIBILITY

Static irreversibility is achieved when, with the gear reducer at a standstill, the application of a load to the output shaft does not set in motion the worm shaft. This condition requires a static efficiency of $\eta_s < 0.5$ (see table above).

The tables opposite shows the approximate irreversibility classes.

Vibrations and shocks can affect a gear reducer's irreversibility.

For the irreversibility conditions of a combined geared unit one must consider that the efficiency of the group is given by the product of the efficiencies of each single reducer, i.e. $\eta_{tot} = \eta_1 \times \eta_2$

DYNAMIC IRREVERSIBILITY

η_d	Dynamic Reversibility
> 0.6	dynamic reversibilty
0.5 ÷ 0.6	low dynamic reversibilty
0.4 ÷ 0.5	good dynamic irreversibilty
< 0.4	dynamic irreversibilty

STATIC IRREVERSIBILITY

η_s	Static Reversibility
> 0.55	static reversibilty
0.5 ÷ 0.55	low static reversibilty
< 0.5	static irreversibilty

Series W Gearboxes : Ordering instructions

First Three digits: Gearmotor Size

Select from the tables on pages 320 to 325 for motorised units and pages 331 to 334 for non-motorised units.

Fourth digit: Mounting Type:

A: Standard Bore - Motorised worm gear unit
D: Standard Bore - Motor ready worm gear unit
G: Standard Bore - Speed reducer worm gear unit
Z: Alternative Bore - Motorised worm gear unit
W: Alternative Bore - Motor ready worm gear unit
T: Alternative Bore - Speed reducer worm gear unit

Fifth/Sixth digits: Gear Ratio Code

1. Assemblies A and Z use complete eight digit code obtained directly from selection tables. Exact gear ratios can be found on page 338.
2. For selection and specification for D or G assemblies then consult your local Authorised Distributor.

Seventh/Eighth digit: Type of drive code

1. Motorised units - use complete code from selection tables with if applicable, additional ninth digit for motor type.
2. Input Reducer assembly - use 00.
3. Unmotorised units ready for a motor fitting by a third party - use the three digit code as shown in the table below:

Code	Frame	Flange
63C	63	B14
63D	63	B5
71C	71	B14
71D	71	B5
80C	80	B14
80D	80	B5
90C	90	B14
90D	90	B5
10C	100	B14
10D	100	B5
11C	112	B14
11D	112	B5
13C	132	B14
13D	132	B5
16D	160	B5
18D	180	B5
20D	200	B5
22D	225	B5
25D	250	B5

Ninth digit: Additional feature.

Use eight digit code obtained from selection tables for required motor power and speed and then add the relevant letter code from table below of the motor variant required.

Code	Additional Feature
A	Anti-condensation heaters fitted
B	Backstop Fitted
M	Brake motor
N	Brake motor with Hand Release
Q	Refer to Original Quote - Special
S	Single Phase motor
T	Fitted with Thermistors
X	Fitted with Variator
Z	Fitted with Force Vent unit

Series W Gearboxes : Ratio codes

WORM GEAR UNIT RATIOS

Ratio Code	Ratio
01	5.0
02	7.5
03	10.0
04	15.0
05	20.0
06	25.0
07	30.0
08	40.0
09	50.0
10	60.0
11	80.0
12	100.0

HELICAL WORM GEAR UNIT RATIOS IEC63, 71 AND 80 FRAME UNITS

			IEC90 Frame Unit	
Ratio Code	Ratio Combination	Final Ratio	Ratio Combination	Final Ratio
20	3 x 25	75	2.42 x 30	72.6
21	3 x 30	90	2.42 x 40	96.8
22	3 x 40	120	2.42 x 50	121.0
23	3 x 50	150	2.42 x 60	145.2
24	3 x 60	180	2.42 x 80	193.6
25	3 x 80	240	2.42 x 100	242.0
26	3 x 100	300	-	-

WORM-WORM GEAR UNIT RATIOS (AVAILABLE ON REQUEST)

Ratio Code	Ratio Combination	Final Ratio
40	10 x 30	300
41	10 x 40	400
42	20 x 25	500
43	20 x 30	600
44	25 x 30	750
45	30 x 30	900
46	30 x 40	1200
47	50 x 30	1500
48	60 x 30	1800
49	60 x 40	2400
50	60 x 50	3000*
51	80 x 40	3200
52	50 x 80	4000
53	60 x 80	4800**
54	50 x 100	5000

*Not available on size 742
**Only available on size 743

ACCESSORY PRODUCT CODES

Ratio Code	Single Output Shaft	Double Output Shaft	Torque Arm	Output Flanges				Output Cover
				Type FA	Type FB	Type FC	Type FD	
740	740A9700	740A9800	740A9600	740A9900	-	-	-	-
741	741A9700	741A9800	741A9600	741A9900	-	-	-	741A9300
742	742A9700	742A9800	742A9600	742A9900	742A9901	742A9902	742A9903	742A9300
743	743A9700	743A9800	743A9600	743A9900	743A9901	743A9902	743A9903	743A9300
744	744A9700	744A9800	744A9600	744A9900	744A9901	744A9902	744A9903	744A9300
745	745A9700	745A9800	745A9600	745A9900	745A9901	-	-	745A9300
746	746A9700	746A9800	746A9600	746A9900	746A9901	746A9902	746A9903	746A9300
747	748A9700	748A9800	748A9600	748A9900	748A9901	-	-	748A9300
749	749A9700	749A9800	749A9600	749A9900	-	-	-	749A9300
750	750A9700	750A9800	750A9600	750A9900	-	-	-	750A9300

Series W Gearboxes : Overhung Load Capacities

ALLOWABLE OVERHUNG LOADS

Units are fitted with input and output bearings of ample proportions to cater for the radial and thrust loads imposed by the gear loads, leaving sufficient capacity for taking overhung loads. The calculated overhung load should be compared with the value in the selection tables.

These values may be exceeded at lower input speeds or if limited bearing lives are acceptable. In cases where higher overhung load capacities are necessary consult your distributor, quoting details of power, speed, direction of gearbox rotation, angle of application of load, distance of load application from gearbox and acceptable bearing life.

Permissible overhung loads vary according to the direction of rotation. The values tabulated are for the most unfavourable direction with the unit transmitting full rated power and the load applied midway along the shaft extension. Hence they can sometimes be increased for a more favourable direction of rotation, or if the power transmitted is less than the rated capacity of the gear unit, or if the load is applied near to the gear unit case. Refer to your Distributor for further details.

In any event, the sprocket, gear etc. should be positioned as close as possible to the gear unit case in order to reduce bearing loads and shaft stresses, and to prolong life. All units will accept a 100% momentary overload on stated capacities.

To determine the overhung load when a sprocket, gear or 'V' pulley is fitted to the output shaft, one or the following formulae may be used in the absence of accurate information.

(1) Calculation on a basis of Torque

$$\text{Overhung load (N)} = \frac{M_2 \times 1000 \times K}{r}$$

(2) Calculatio on a basis of Power

$$\text{Overhung load (N)} = \frac{P_2 \times 9550 \times 1000 \times K}{n_2 \times r}$$

Where:

M_2 = Absorbed torque at shaft in Nm.
P_2 = Absorbed power in kW.
r = Pitch radius of sprocket, gear or 'V' pulley in mm.
n_2 = Rev/min of shaft.
K = Application factor -
1.00 for a sprocket
1.25 for a gear or timing pulley
1.50 for a 'V' pulley

Overhung loads may be reduced by one of the following methods:

(1) Increase the diameter of the sprocket, gear or pulley within reasonable limits.

(2) Mount the sprocket, gear or pulley on a separate shaft, supported on its own bearings and couple to the gear unit output shaft by means of a Fenner shaft coupling.

(3) Use a special extended output shaft and support the free end with an outrigger bearing.

Axial Thrust Capacities (N)

No check or calculation is required for axial loads towards or away from the unit up to 50% of the permissible overhung load. If the axial thrust exceeds these values or if there is a combination of axial thrust loads and overhung loads please refer to your local Authorised Distributor.

DISTANCE MIDWAY ALONG SHAFT EXTENSION

Unit Size	Dimension A (mm)	Dimension B (mm)
740	11.5	-
741	15	10
742	20	11.5
743	25	15
744	25	20
745	30	25
746	40	25
747	40	30
749	40	40

ALLOWABLE INPUT SHAFT OVERHUNG LOADS Frb (N) @1450 Rev/Min.

Unit Size	Max Load
740	-
741	210
742	350
743	490
744	700
745	980
746	1270
747	1700
749	2100

*For Output Shaft Overhung Load Capacities (Fra) see the relevant selection tables

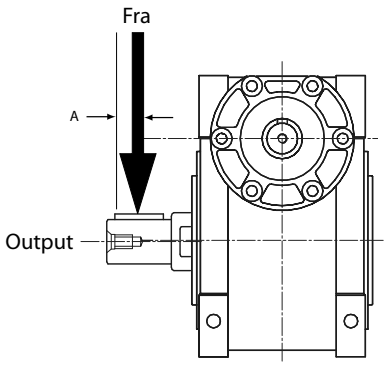

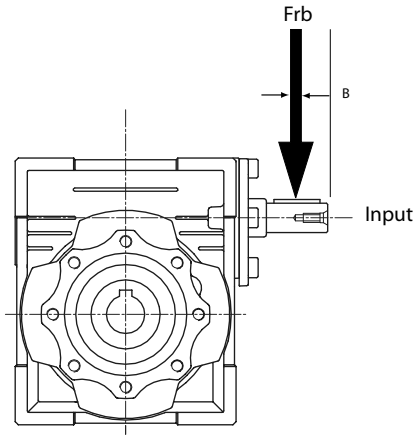

Output shaft dimensions refer to both motorised and non motorised units.

Series W Gearboxes : Installation and Maintenance

Satisfactory performance depends on proper installation, lubrication and maintenance. All instructions given in the installation leaflet must be followed carefully.

SHAFT MOUNTING

Ensure that the shaft on to which the gear unit is to be mounted and the gear unit bore are clean and free from burrs.

Liberally smear the shaft and bore with lubricants to aid assembly and prevent fretting corrosion. Slide the unit onto the driven shaft. Fit side fitting key. DO NOT USE TAPER OR TOP FITTING KEY.

FOOT MOUNTING

Mount the unit securely to a rigid structure. Fit the output extension shaft as required. Use flexible couplings such as Fenaflex for shaft to shaft connections and ensure that shaft misalignment is within the coupling's capacity. When a pulley or sprocket is fitted to either shaft, mount it as close as possible to the gearcase.

When fitting or removing drive components do not hammer on shaft as this will damage the bearings, Fenner Taper Lock bushes permit easy fixing and dismantling without undue force.

LUBRICATION

Sizes 740 to 746 are pre-filled with IP TELIUM VSF 320 a synthetic gear oil suitable for permanent lubrication. They can be mounted in any position. Sizes 745, 746 & 747 should not be installed in the V5 or V6 position without prior consultation.
The synthetic oil used is suitable for ambient temperatures between -25°C and +50°C.

Sizes 747 - 749 are pre-filled for mounting position B3 with IP MELLANA OIL 220, a mineral based gear oil.

Other mounting positions must be specified on order. The Mineral oil used is suitable to operate in ambient temperatures between -15°C and +25°C

HELICAL-WORM GEAR UNIT

The helical modules are supplied as a sealed for life unit complete with a long-life synthetic oil, AGIP TELIUM VSF320 and can be mounted in all positions.

The lubrication is separate from that of the worm gear unit.

BREATHERS/MOUNTING POSITIONS

Sizes 740 to 746 are supplied for operation without breathers, level & drain plugs.

Sizes 747 - 749 are supplied for operation with a breather but are dispatched with a closed transport plug. When the unit is in its operating position it is essential to replace the transport plug with the breather plug (supplied) in the position indicated on the installation leaflet prior to operating the unit.

MAINTENANCE

The high quality of Series W ensures that the unit will operate correctly with only the minimum amount of maintenance. Periodically check that the exterior of the assembly is clean, especially the cooling areas; periodically check for any oil leaks especially around the oil seals.

Sizes 740 to 746 are lubricated for life and do not require any special maintenance other than stated above.

Sizes 747 to 749 will require an oil change between 8,000-10,000 hours of use depending on the type of environment and use. Make sure the breather hole in the plug is clean and using the oil window, check for sufficient lubricant. Should it be necessary to top up the lubricant use the same type that is already in the unit or one that is compatible with it. If in doubt we recommend you empty the oil from the gearbox completely and before refilling with new oil, wash out the unit to remove any residue.

LUBRICATION CAPACITY

Unit Size	All Positions
740	0.02
741	0.04
742	0.08
743	0.15
744	0.30
745	0.55
746	1.00
747	1.60

Mounting Position	749	750
B3	4.5	7.0
B8	3.3	5.1
B6-B7	3.5	5.4
V5	4.5	7.0
V6	3.3	5.1

RECOMMENDED TYPES

Supplier	Synthetic Oil Operation Temp °C	Mineral Oil Operationg Temp °C	
	-25°C to +50°C	-5°C to +40°C	-15°C to +25°C
AGIP	TELIUM VSF 320	BLASIA 460	BLASIA 220
BP	ENERGOL SG-XP320	ENERGOL GR-XP 460	ENERGOL GR-XP 220
CASTROL	ALPHASYN PG320	ALPHA MAX 460	ALPHA MAX 220
ESSO	S220	SPARTAN EP 460	SPARTAN EP 220
MOBIL	GLYGOYLE 30	MOBILGEAR 634	MOBILGEAR 630
OKS	-	-	OKS 3725
SHELL	TIVELA OIL SC320	OMALA OIL 460	OMALA OIL 220

MOUNTING POSITIONS

Standard Floor Mounting (B3)

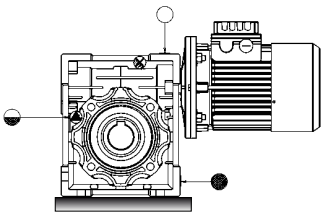

Ceiling Mounted (B8)

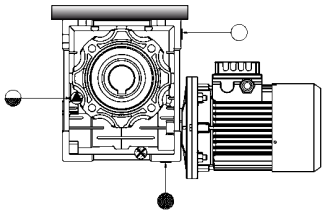

Wall Mounting Input (V6)

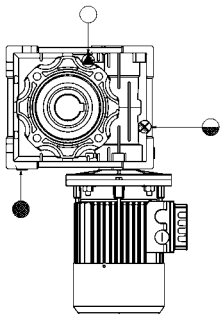

Wall Mounting Input (V5)

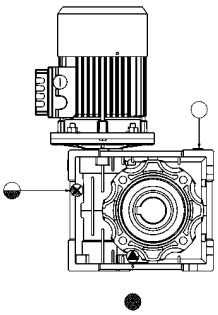

Left Hand Wall Mounting (B6)

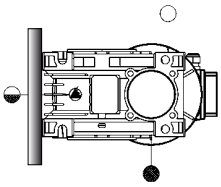

Right Hand Wall Mounting (B7)

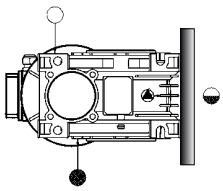

○ Ventilator/Filling Position
◒ Level Position
● Drain Position

Section 9:

Gearboxes: CYCLO

A whole new concept in gear design using a patented epicyclic gear profile to offer trouble free, high ratio solutions to a wide range of industries.

- 21 sizes with ratings from 0.12 to 55kW
- Ratios from 6:1 to 658,503:1
- 500% shock overload capacity
- 2 year warranty
- Dry-fit gearhead
- Standard IEC or integrated motor options
- Compact, silent & low maintenance

Geared Drives: Design Data Required	
Motorised(integralmotor)ornon-motorised?	> If motorised: electrical supply available any special motor features required (brake, thermistors, flameproof etc.) > If non-motorised: type of prime mover rotational speed of prime mover power rating of prime mover is an input shaft couplingrequired? If so, prime mover shaft dia.
Flange mounted or foot mounted?	>Ifshaftmounted,machineshaftdiameter/length > if flange mounted, is an output shaft and coupling required?
Type of driven machine	
Rotational speed of driven machine	> constant or variable over what range?
Power absorbed by driven machine (or required output torque)	
Hours/day duty & start/stop frequency	

Fenner SMSR	Page
Selection Procedure	343
Motorised Selection Tables	344
Slow Speed Motorised Selection Tables	348
Dimensions - IEC Geared Motors	349
Dimensions - Integrated Geared Motors	355
Speed Reducer Selection Tables	359
Dimensions - Speed Reducers	374
Dimensions - Motor Ready 620DB-624DA	375
IEC Adaptor Dimensions	376
Minimum Motor Power	377
Minimum Input Power - Reducers	378
Breakaway Torque	378
Output Torque Ratings	379
Ordering Instructions	381

Visit www.fptgroup.com

The revolutionary design of the Cyclo discs offers smooth and silent operation and excellent resistance to overloads. Extremely high ratios can be achieved within a very small envelope offering high efficiency in a very small package.

Fenner CYCLO

Revolutionary design offers smooth, silent, efficient operation.

- High overload capacity up to 500%
- Offering high efficiency, especially at high reduction ratios
- Compact size and low noise level
- High reliability with 2 years warranty
- Exceptional life compared to other types of gearing

OPERATING PRINCIPLE

The unique concept of the Cyclo unit provides exceptional performance, reliability and long life in the most severe applications.

Unlike Helical gears, the Cyclo has thirty percent of its reduction components in contact at all times offering an extremely high overload capacity.

As the Eccentric bearing rotates, it rolls the Cyclo Disc around the internal circumference of the stationary Ring Gear Housing (an action similar to that of a wheel rolling around the inside of a ring).

As the Cyclo Disc travels in a clockwise path around the Ring Gear Housing, the Cyclo Disc itself rotates slowly on its own axis in the opposite direction. For each complete revolution of the INPUT shaft, the Cyclo Disc turns one cycloidal tooth pitch in the opposite direction.

The ratio of the Cyclo drive is numerically equal to the number of cycloidal teeth on the Cyclo Disc.

The reduced speed is transmitted to the OUTPUT shaft by means of the Slow speed shaft pins and rollers which engage with the holes located around the middle of each disc. Typically a Two-Disc system is used allowing a smoother and vibration-free drive with a higher torque capacity.

Fenner®

THE MARK OF ENGINEERING EXCELLENCE

www.fptgroup.com

Cyclo Gearboxes : Selection Procedure

SELECTION PROCEDURE

(a) Service Factor
From table 1 select the Mechanical Service Factor (Fm) applicable to the drive. If the unit is to be subjected to frequent stop/starts then multiply factor Fm by Factor Fs from table 2.

(b) Motor Power
Refer to the selection tables on pages 344 to 348 and choose a motor power equal or in excess of that required. If the power is not known, use the formula below to establish a minimum input power and select from the nearest available selection table.

$$P_2 = \frac{M_2 \times n_2}{9550}$$

P_2 = Absorbed power (kW)
M_2 = Output torque (Nm)
n_2 = Output speed (rpm)

(c) Unit Selection
Refer to the selection tables for the required motor selected in step (b) on pages 344 to 348. Read down the column to find the closest speed to meet your requirements. Trace along the line to the service factor from step (a). If the service factor is either lower or significantly higher than that required, scan up and down to establish if a better selection is available.

(d) Overhung Loads
If an indirect drive is to be fitted to the output shaft, calculate the overhung load value using the formula below and ensure that the maximum allowable overhung load is not exceeded. If the calculated overhung load is greater than the allowable overhund load, either re-design the indirect drive or select a unit with a greater overhung load capacity.

$$F_{Rq} = \frac{2000 \times Mef \times FB1 \times Lf \times Cf}{\text{PCD of drive element (mm)}}$$

F_{Rq} = Equivalent radial load used for selection (N)
M_{ef} = Required output torque (Nm)
F_{B1} = Service factor from section (a)
L_f = Correction factor for load position
C_f = Correction factor for type of drive

C_f value for different drive types

Chain = 1.00
Pinion = 1.25
V-Belt = 1.50

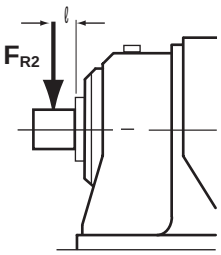

SELECTION EXAMPLE

A Fenner Cyclo geared motor unit is required to operate a stone crusher that will start 35 times a day and operate for a total of 9 hours per day.

The absorbed torque is 700Nm and the speed required is 50rpm. There will be a flexible coupling on the output shaft so the Overhung Load will not be an issue.

(a) Service Factor
From table 1 a stone crusher has been classified as a Heavy Shock Load. The service factor for such a unit operating at up to 10 hours per day is shown as 1.35. The unit is going to experience frequent stop/starts so the Fm factor needs to be multiplied by the Fs factor from table 2. For Heavy Shock Loads <200 stop/starts per day, the Fs factor is 1.25.

(b) Motor Power
As we do not know the motor power required, we need to calculate it based on our torque requirement.

Therefore the absorbed Power P_A =

$$\frac{700\text{Nm} \times 50\text{ rpm}}{9550} = 3.66\text{ kW}$$

(c) Unit Selection
Refer to the selection table relevant to the closest motor size of 4.0kW on page 346. Look down the Output speed column for the nearest speed to 50rpm and for a unit with a service factor equal to or greater than 1.69.
The closest selection is a 614X1146.

TABLE 1 - MECHANICAL SERVICE FACTOR (Fm)

Types of Driven Machine	Operational Hours		
	Under 3	3 to 10	Over 10
Uniform Loads Agitators and Mixers – liquid or semi-liquid Conveyors – uniformly loaded Cookers Paper Bleaching apparatus Pumps – centrifugal Rubber extruders	0.80	1.00	1.20
Moderate Shock Loads Agitators and Mixers – variable viscosity Calenders Conveyors - heavy duty with irregular loads Cranes and hoists Drying drums Dyeing machines Excavator winches Rolling mill transfer beds Scrapers Screw pumps Sugar mills Tanning machines	1.00	1.10	1.35
Heavy Shock Loads Brick Presses Kneeding machines Metal presses and shears Paper beaters and wet presses Roller tables Stone crushers	1.20	1.40	1.60

TABLE 2 - STARTING SERVICE FACTOR (Fs)

	Start/stops per hour		
	< 10	< 200	< 500
Uniform Load	1.00	1.10	1.15
Moderate ShockLoad	1.00	1.18	1.32
Heavy Shock Load	1.00	1.25	1.40

TABLE 3 - CORRECTION FACTOR (LF) FOR LOAD POSITION

Unit Size	5 mm	10 mm	15 mm	20 mm	25 mm	30 mm	35 mm	40 mm	45 mm	50 mm	60mm	70 mm	80 mm	90 mm	100 mm	120 mm
606	0.83	0.94	1.19	1.56	1.74	1.98	-	-	-	-		-	-	-	-	-
607	0.82	0.91	1.00	1.29	1.59	1.88	2.00	2.23	-	-		-	-	-	-	-
608	0.81	0.87	0.94	1.03	1.28	1.54	1.80	1.85	2.00	2.19	-	-	-	-	-	-
609	0.86	0.92	0.97	1.13	1.38	1.64	1.90	1.98	2.15	2.32	-	-	-	-	-	-
610	0.86	0.92	0.97	1.13	1.38	1.64	1.90	1.98	2.15	2.32	2.68	-	-	-	-	-
611	0.78	0.84	0.90	0.96	1.02	1.08	1.19	1.36	1.53	1.65	1.71	2.00	-	-	-	-
612	-	0.82	0.87	0.92	0.97	1.08	1.25	1.42	1.59	1.76	1.90	2.15	-	-	-	-
613	-	-	0.83	0.87	0.92	0.96	1.00	1.13	1.25	1.38	1.63	1.88	1.95	2.19	2.67	-
614	-	-	-	0.66	0.73	0.80	0.87	0.93	1.00	1.10	1.30	1.50	1.70	1.90	2.05	-
616	-	-	-	0.83	0.87	0.90	0.93	0.97	1.00	1.11	1.32	1.53	1.75	1.96	-	-
617	-	-	-	0.86	0.89	0.92	0.94	0.97	1.00	1.11	1.32	1.53	1.75	1.96	-	-
618	-	-	-	-	0.85	0.87	0.90	0.93	0.95	0.98	1.09	1.26	1.43	1.60	1.78	-
619	-	-	-	-	-	0.85	0.87	0.89	0.91	0.93	0.97	1.04	1.18	1.32	1.46	1.75

Cyclo Gearboxes : Motorised selection

0.12 KW MOTOR

Speed Rev/Min	Output Torque Nm	Service Factor	Unit Selection	Overhung Load N
1.86	538	1.21	612DAX4648	9810
1.86	538	1.81	613DBX4648	14700
2.10	478	1.36	612DAX4548	9810
2.10	478	2.30	613DBX4548	14700
2.29	438	1.49	612DAX4448	9810
2.29	438	2.22	613DBX4448	14700
2.43	412	1.58	612DAX4348	9810
2.43	412	2.37	613DBX4348	14700
2.59	387	0.80	610DAX4248	1460
2.59	387	1.69	612DAX4248	9810
2.88	348	0.89	610DAX3948	4140
2.88	348	1.87	612DAX3948	9810
3.20	313	0.99	610DAX3748	5400
3.20	313	2.08	612DAX3748	9810
3.61	278	1.12	610DAX3548	5400
3.61	278	2.34	612DAX3548	9810
3.81	263	1.18	610DAX3448	5400
3.81	263	2.48	612DAX3448	9810
4.26	235	1.32	610DAX3248	5400
4.26	235	2.69	612DAX3248	9810
4.98	201	1.03	609DAX3048	3340
4.98	201	1.54	610DAX3048	5400
5.89	170	1.22	609DAX2848	3340
5.89	170	1.83	610DAX2848	5400
6.97	144	1.44	609DAX2648	3340
6.97	144	2.17	610DAX2648	5400
8.24	122	1.70	609DAX2348	3340
8.24	122	2.56	610DAX2348	5400
9.51	105	1.80	609DAX2248	3340
11.2	89	1.86	609DAX2148	3340
11.4	93	1.21	609X1848	3340
13.1	77	0.81	607DAX2048	1770
13.1	77	2.40	609DAX2048	3340
15.6	68	1.01	608X1748	2560
15.6	68	2.16	609X1748	3340
19.2	55	1.66	608X1648	2560
19.2	55	2.30	609X1648	3340
23.1	46	1.13	607X1548	1630
23.1	46	1.95	608X1548	2560
26.7	40	1.19	607X1448	1660
26.7	40	2.01	608X1448	2560
31.6	33	0.93	606X1348	1180
31.6	33	1.86	607X1348	1770
38.9	27	1.14	606X1248	1180
38.9	27	2.27	607X1248	1770
46.9	23	1.38	606X4848	1180
46.9	23	2.31	607X4848	1770
54.4	19	1.38	606X1048	1180
54.4	19	2.42	607X1048	1770
64.8	16	1.90	606X0948	1180
80.0	13	2.35	606X0848	1180
90.7	12	2.38	606X0748	1180
104.6	10	2.38	606X0648	1180
123.6	9	2.38	606X0548	1120
170.0	6	2.38	606X0448	821
226.7	5	2.38	606X0348	717

0.18 KW MOTOR

Speed Rev/Min	Output Torque Nm	Service Factor	Unit Selection	Overhung Load N
1.87	731	0.81	612DAX4602	9810
1.87	731	1.21	613DBX4602	14700
2.11	649	0.91	612DAX4502	9810
2.11	649	1.52	613DBX4502	14700
2.30	595	0.99	612DAX4402	9810
2.30	595	1.48	613DBX4402	14700
2.45	559	1.06	612DAX4302	9810
2.45	559	1.58	613DBX4302	14700
2.61	525	1.12	612DAX4202	9810
2.61	525	1.64	613DBX4202	14700
2.90	473	1.25	612DAX3902	9810
2.90	473	1.86	613DBX3902	14700
3.22	425	1.39	612DAX3702	9810
3.22	425	2.03	613DBX3702	14700
3.63	377	1.57	612DAX3502	9810
3.84	357	1.65	612DAX3402	9810
4.29	319	0.88	610DAX3202	4520
4.29	319	1.85	612DAX3202	9810
5.02	273	1.03	610DAX3002	5400
5.02	273	2.17	612DAX3002	9810
5.93	231	0.81	609DAX2802	3240
5.93	231	1.22	610DAX2802	5400
5.93	231	2.55	612DAX2802	9810
7.03	195	0.96	609DAX2602	3340
7.03	195	1.44	610DAX2602	5400
7.03	195	3.04	612DAX2602	9810
8.30	165	1.14	609DAX2302	3340
8.30	165	1.70	610DAX2302	5400
9.60	143	1.20	609DAX2202	3340
9.60	143	1.97	610DAX2202	5400
11.3	121	1.24	609DAX2102	3340
11.3	121	2.35	610DAX2102	5400
11.5	119	0.81	609X1802	3340
13.2	104	1.63	609DAX2002	3340
15.7	87	1.46	609X1702	3340
19.3	71	1.12	608X1602	2560
19.3	82	1.54	609X1602	3340
23.2	68	1.30	608X1502	2560
23.2	68	1.87	609X1502	3340
26.9	59	1.34	608X1402	2560
26.9	59	2.24	609X1402	3340
31.9	49	1.24	607X1302	1740
31.9	49	1.63	608X1302	2560
39.1	40	1.51	607X1202	1770
39.1	40	2.28	608X1202	2560
47.2	33	0.92	606X1102	1180
47.2	33	1.59	607X1102	1770
47.2	33	2.60	608X1102	2520
54.8	29	0.92	606X1002	1180
54.8	29	1.63	607X1002	1770
54.8	29	2.64	608X1002	2460
65.2	24	1.30	606X0902	1180
65.2	24	2.26	607X0902	1770
80.6	20	1.60	606X0802	1180
91.3	17	1.60	606X0702	1180
105.4	15	1.60	606X0602	1180
124.5	13	1.60	606X0502	1110
171.3	9	1.60	606X0402	817
228.3	7	1.60	606X0302	714

0.25 KW MOTOR

Speed Rev/Min	Output Torque Nm	Service Factor	Unit Selection	Overhung Load N
1.92	1140	0.87	613DBX4606	14700
1.92	1140	1.26	614DCX4606	16000
2.16	1010	1.09	613DBX4506	14700
2.16	1010	1.42	614DCX4506	16000
2.35	926	1.07	613DBX4406	14700
2.35	926	1.55	614DCX4406	16000
2.50	870	1.13	613DBX4306	14700
2.50	870	1.65	614DCX4306	16000
2.67	817	0.81	612DAX4206	9810
2.67	817	1.16	613DBX4206	14700
2.67	817	1.76	614DCX4206	16000
2.96	736	0.90	612DAX3906	9810
2.96	736	1.34	613DBX3906	14700
2.96	736	1.88	614DCX3906	16000
3.29	662	1.00	612DAX3706	9810
3.29	662	1.43	613DBX3706	14700
3.29	662	2.08	614DCX3706	16000
3.71	587	1.13	612DAX3506	9810
3.71	587	1.68	613DBX3506	14700
3.92	556	1.19	612DAX3406	9810
3.92	556	1.78	613DBX3406	14700
4.39	497	1.33	612DAX3206	9810
4.39	497	1.99	613DBX3206	14700
5.13	425	1.56	612DAX3006	9810
6.06	360	0.88	610DAX2806	4940
6.06	360	1.72	612DAX2806	9810
6.06	360	1.84	612DBX2806	9810
7.18	304	1.04	610DAX2606	5400
7.18	304	1.66	612DAX2606	9810
8.48	257	0.82	609DAX2306	3340
8.48	257	1.23	610DAX2306	5400
8.48	257	1.66	612DAX2306	9810
9.79	223	0.87	609DAX2206	3340
9.79	223	1.42	610DAX2206	5400
9.79	223	1.66	612DAX2206	9810
11.6	188	0.89	609DAX2106	3340
11.6	188	1.72	610DAX2106	5400
11.8	196	1.14	610X1806	4710
13.5	162	1.17	609DAX2006	3340
13.5	162	1.72	610DAX2006	5400
16.1	143	1.05	609X1706	3340
16.1	143	2.01	610X1706	4790
19.7	117	1.11	609X1606	3340
19.7	117	2.02	610X1606	4770
23.7	86	1.02	608X1506	2560
23.7	86	1.47	609X1506	3340
27.5	84	0.96	608X1406	2560
27.5	84	1.63	609X1406	3340
32.6	82	0.77	607X1306	1620
32.6	82	0.99	608X1306	2560
32.6	82	2.02	609X1306	3340
40.0	58	1.09	607X1206	1730
40.0	58	1.60	608X1206	2560
48.3	48	1.14	607X1106	1730
48.3	48	1.87	608X1106	2500
56.0	41	1.18	607X1006	1740
56.0	41	1.90	608X1006	2450
66.7	35	0.91	606X0906	1180
66.7	35	1.63	607X0906	1770
82.4	28	1.13	606X0806	1180
82.4	28	1.63	607X0806	1770
93.3	25	1.14	606X0706	1180
93.3	25	1.63	607X0706	1670
107.7	21	1.14	606X0606	1170
107.7	21	1.63	607X0606	1670
127.3	18	1.14	606X0506	1090
127.3	18	1.63	607X0506	1580
175.0	13	1.14	606X0406	811
175.0	13	1.63	607X0406	1410
233.3	10	1.14	606X0306	710
233.3	10	1.63	607X0306	1280

0.37 KW MOTOR

Speed Rev/Min	Output Torque Nm	Service Factor	Unit Selection	Overhung Load N
1.90	1650	0.85	614DCX4608	16000
2.14	1470	0.96	614DCX4508	16000
2.34	1350	1.05	614DCX4408	16000
2.49	1270	1.12	614DCX4308	16000
2.65	1190	1.19	614DCX4208	16000
2.94	1070	0.91	613DBX3908	14700
2.94	1070	1.32	614DCX3908	16000
3.27	962	0.98	613DBX3708	14700
3.27	962	1.47	614DCX3708	16000
3.69	853	1.14	613DBX3508	14700
3.69	853	1.66	614DCX3508	16000
3.89	808	0.80	612DAX3408	9810
3.89	808	1.20	613DBX3408	14700
3.89	808	1.71	614DCX3408	16000
4.36	722	0.90	612DAX3208	9810
4.36	722	1.34	613DBX3208	14700
5.09	618	1.05	612DAX3008	9810
5.09	618	1.57	613DBX3008	14700
6.02	523	1.16	612DAX2808	9810
6.02	523	1.24	612DBX2808	9810
6.02	523	1.86	613DBX2808	14700
7.13	441	1.47	612DBX2608	9810
7.13	441	2.24	613DBX2608	14700
8.42	373	0.83	610DAX2308	3610
8.42	373	1.74	612DBX2308	9810
9.72	324	0.96	610DAX2208	5400
9.72	324	1.15	612DAX2208	9810
9.72	324	2.01	612DBX2208	9810
11.5	274	1.16	610DAX2108	5400
11.5	274	1.15	612DAX2108	9810
13.4	235	1.16	610DAX2008	5400
13.4	235	1.15	612DAX2008	9810
16.0	208	1.36	610X1708	4750
16.0	208	2.00	611X1708	6870
19.6	170	1.37	610X1608	4740
19.6	170	2.00	611X1608	6880
23.6	141	0.91	609X1508	3340
23.6	141	1.84	610X1508	4980

Cyclo Gearboxes : Motorised selection

Speed Rev/Min	Output Torque Nm	Service Factor	Unit Selection	Overhung Load N
27.3	122	1.10	609X1408	3340
27.3	122	2.10	610X1408	5060
32.3	103	1.63	609X1308	3340
39.7	84	1.10	608X1208	2560
39.7	84	2.05	609X1208	3340
47.9	69	1.26	608X1108	2470
47.9	69	2.12	609X1108	3340
55.6	60	1.28	608X1008	2430
55.6	60	2.33	609X1008	3340
66.2	50	1.10	607X0908	1730
66.2	50	1.49	608X0908	2360
66.2	50	4.02	609X0908	3340
81.8	41	1.10	607X0808	1730
81.8	41	2.10	608X0808	2430
92.7	36	1.10	607X0708	1640
92.7	36	2.10	608X0708	2320
106.9	31	1.10	607X0608	1640
106.9	31	2.10	608X0608	2240
126.4	26	1.10	607X0508	1550
126.4	26	2.10	608X0508	2090
173.8	19	1.10	607X0408	1390
173.8	19	2.10	608X0408	1890
231.7	14	1.10	607X0308	1260
231.7	14	2.10	608X0308	1750

0.55 KW MOTOR

Speed Rev/Min	Output Torque Nm	Service Factor	Unit Selection	Overhung Load N
1.93	2490	0.88	616DBX4616	22100
1.93	2490	1.32	617DCX4616	29500
2.17	2210	0.99	616DBX4516	22100
2.17	2210	1.49	617DCX4516	29500
2.37	2030	1.08	616DBX4416	22100
2.37	2030	1.62	617DCX4416	29500
2.52	1910	1.15	616DBX4316	22100
2.52	1910	1.73	617DCX4316	29500
2.69	1790	0.80	614DCX4216	16000
2.69	1790	1.23	616DBX4216	22100
2.69	1790	1.84	617DCX4216	29500
2.98	1610	0.89	614DCX3916	16000
2.98	1610	1.36	616DBX3916	22100
2.98	1610	2.04	617DCX3916	29500
3.32	1450	0.99	614DCX3716	16000
3.32	1450	1.52	616DBX3716	22100
3.74	1290	1.11	614DCX3516	16000
3.74	1290	1.71	616DBX3516	22100
3.95	1220	0.81	613DBX3416	14700
3.95	1220	1.15	614DCX3416	16000
3.95	1220	1.80	616DBX3416	22100
4.42	1090	0.90	613DBX3216	14700
4.42	1090	1.32	614DCX3216	16000
4.42	1090	2.02	616DBX3216	22100
5.16	932	1.06	613DBX3016	14700
5.16	932	1.50	614DCX3016	16000
6.10	788	0.84	612DBX2816	9810
6.10	788	1.25	613DBX2816	14700
6.10	788	1.78	614DCX2816	16000
7.23	666	0.99	612DBX2616	9810
7.23	666	1.48	613DBX2616	14700
8.55	563	1.17	612DBX2316	9810
8.55	563	1.75	613DBX2316	14700
9.86	488	1.35	612DBX2216	9810
9.86	488	2.02	613DBX2216	14700
11.7	413	1.58	612DBX2116	9810
11.7	413	2.40	613DBX2116	14700
13.6	355	1.87	612DBX2016	9810
16.2	313	0.92	610X1716	4690
16.2	313	1.38	611X1716	6780
16.2	313	1.87	612X1716	9810
19.9	256	0.92	610X1616	4690
19.9	256	1.38	611X1616	6810
19.9	256	2.07	612X1616	9810
23.9	213	1.24	610X1516	4940
23.9	213	1.84	611X1516	6880
27.6	184	1.41	610X1416	5020
27.6	184	2.02	611X1416	6890
32.8	155	1.10	609X1316	3340
32.8	155	1.96	610X1316	5070
40.3	126	1.38	609X1216	3340
40.3	126	2.12	610X1216	5080
48.6	104	0.85	608X1116	2430
48.6	104	1.43	609X1116	3340
48.6	104	2.83	610X1116	5120
56.4	90	0.84	608X1016	2390
56.4	90	1.57	609X1016	3340
67.1	76	1.00	608X0916	2330
67.1	76	2.75	609X0916	3340
82.9	61	1.41	608X0816	2390
94.0	54	1.41	608X0716	2290
108.5	47	1.41	608X0616	2220
128.2	40	1.41	608X0516	2070
176.3	29	1.41	608X0416	1880
235.0	22	1.41	608X0316	1730

0.75 KW MOTOR

Speed Rev/Min	Output Torque Nm	Service Factor	Unit Selection	Overhung Load N
1.92	3380	0.97	617DCX4618	29500
1.92	3380	1.54	618DBX4618	41700
2.16	3000	1.09	617DCX4518	29500
2.16	3000	1.73	618DBX4518	41700
2.35	2750	1.19	617DCX4418	29500
2.35	2750	1.89	618DBX4418	41700
2.50	2580	0.85	616DBX4318	22100
2.50	2580	1.27	617DCX4318	29500
2.50	2580	2.01	618DBX4318	41700
2.67	2430	0.90	616DBX4218	22100
2.67	2430	1.35	617DCX4218	29500
2.67	2430	2.14	618DBX4218	41700
2.96	2190	1.00	616DBX3918	22100
2.96	2190	1.50	617DCX3918	29500
3.29	1960	1.11	616DBX3718	22100
3.29	1960	1.67	617DCX3718	29500
3.71	1740	0.82	614DCX3518	16000
3.71	1740	1.25	616DBX3518	22100
3.71	1740	1.88	617DCX3518	29500
3.92	1650	0.84	614DCX3418	16000
3.92	1650	1.32	616DBX3418	22100
3.92	1650	1.98	617DCX3418	29500
4.39	1470	0.97	614DCX3218	16000
4.39	1470	1.48	616DBX3218	22100
5.13	1260	1.10	614DCX3018	16000
5.13	1260	1.73	616DBX3018	22100
6.06	1070	0.92	613DBX2818	14700
6.06	1070	1.30	614DCX2818	16000
6.06	1070	2.04	616DBX2818	22100
7.18	901	1.08	613DBX2618	14700
7.18	901	1.57	614DCX2618	16000
8.48	762	0.86	612DBX2318	9810
8.48	762	1.28	613DBX2318	14700
9.80	661	0.99	612DBX2218	9810
9.80	661	1.48	613DBX2218	14700
11.6	559	1.20	612DBX2118	9810
11.6	559	1.80	613DBX2118	14700
13.5	481	1.40	612DBX2018	9810
13.5	481	2.00	613DBX2018	14700
16.1	424	1.00	611X1718	6680
16.1	424	1.40	612X1718	9810
19.7	346	1.00	611X1618	6730
19.7	346	1.50	612X1618	9810
23.7	288	0.90	610X1518	4890
23.7	288	1.40	611X1518	6820
23.7	288	2.20	612X1518	9810
27.5	249	1.02	610X1418	4980
27.5	249	1.50	611X1418	6830
32.6	210	0.79	609X1318	3190
32.6	210	1.41	610X1318	5030
32.6	210	2.00	611X1318	6840
40.0	171	1.00	609X1218	3340
40.0	171	1.60	610X1218	5040
48.3	141	1.05	609X1118	3340
48.3	141	2.12	610X1118	5090
56.0	133	1.05	609X1018	3340
56.0	133	2.01	610X1018	5090
66.7	113	1.80	609X0918	3340
82.4	83	1.04	608X0818	2360
82.4	83	2.03	609X0818	3340
93.3	73	1.04	608X0718	2260
93.3	73	2.03	609X0718	3340
107.7	63	1.04	608X0618	2190
107.7	63	2.03	609X0618	3340
127.3	54	1.04	608X0518	2040
127.3	54	2.03	609X0518	3340
175.0	39	1.04	608X0418	1860
175.0	39	2.03	609X0418	3340
233.3	29	1.04	608X0318	1720
233.3	29	2.03	609X0318	3340

1.1 KW MOTOR

Speed Rev/Min	Output Torque Nm	Service Factor	Unit Selection	Overhung Load N
1.94	4900	1.05	618DBX4624	41700
1.94	4900	1.67	619DAX4624	58600
2.19	4350	1.18	618DBX4524	41700
2.19	4350	1.88	619DAX4524	58600
2.39	3990	0.81	617DCX4424	29500
2.39	3990	1.29	618DBX4424	41700
2.39	3990	2.05	619DAX4424	58600
2.54	3750	0.86	617DCX4324	29500
2.54	3750	1.37	618DBX4324	41700
2.70	3520	0.92	617DCX4224	29500
2.70	3520	1.46	618DBX4224	41700
3.00	3170	1.02	617DCX3924	29500
3.00	3170	1.62	618DBX3924	41700
3.34	2850	1.14	617DCX3724	29500
3.34	2850	1.80	618DBX3724	41700
3.77	2530	0.85	616DBX3524	22100
3.77	2530	1.28	617DCX3524	29500
3.77	2530	2.03	618DBX3524	41700
3.98	2390	0.90	616DBX3424	22100
3.98	2390	1.35	617DCX3424	29500
3.98	2390	2.15	618DBX3424	41700
4.45	2140	1.01	616DBX3224	22100
4.45	2140	1.51	617DCX3224	29500
5.20	1830	1.18	616DBX3024	22100
5.20	1830	1.77	617DCX3024	29500
6.15	1550	0.89	614DCX2824	16000
6.15	1550	1.39	616DBX2824	22100
6.15	1550	2.09	617DCX2824	29500
7.28	1310	1.07	614DCX2624	16000
7.28	1310	1.65	616DBX2624	22100
8.61	1110	0.87	613DBX2324	14700
8.61	1110	1.26	614DCX2324	16000
8.61	1110	1.95	616DBX2324	22100
9.93	959	1.01	613DBX2224	14700
9.93	959	1.47	614DCX2224	16000
9.93	959	2.23	616DBX2224	22100
11.7	811	1.19	613DBX2124	14700
11.7	811	1.64	614DCX2124	16000
13.7	697	0.93	612DBX2024	9810
13.7	697	1.39	613DBX2024	14700
16.3	616	0.94	612X1724	7460
16.3	616	1.50	613X1724	13200
20.0	502	1.04	612X1624	9350
20.0	502	1.85	613X1624	12300
24.1	418	0.92	611X1524	6700
24.1	418	1.47	612X1524	9810
27.8	361	1.01	611X1424	6720
27.8	361	1.79	612X1424	9810
33.0	304	0.98	610X1324	4970
33.0	304	1.38	611X1324	6770
33.0	304	2.13	612X1324	9730
40.6	248	1.09	610X1224	4990
40.6	248	1.65	611X1224	6540
49.0	205	1.45	610X1124	5040
49.0	205	2.02	611X1124	6500
56.8	177	1.52	610X1024	5040
56.8	177	2.02	611X1024	6350
67.6	149	1.37	609X0924	3340
67.6	149	2.07	610X0924	5110
83.5	120	1.38	609X0824	3340
94.7	106	1.38	609X0724	3340
109.2	92	1.38	609X0624	3340
129.1	78	1.38	609X0524	3340
177.5	57	1.38	609X0424	3340
236.7	43	1.38	609X0324	3340

Cyclo Gearboxes : Motorised selection

1.5 KW MOTOR

Speed Rev/Min	Output Torque Nm	Service Factor	Unit Selection	Overhung Load N
1.92	6710	1.22	619DAX4628	58600
2.16	5950	0.87	618DBX4528	41700
2.16	5950	1.38	619DAX4528	58600
2.35	5460	0.95	618DBX4428	41700
2.35	5460	1.5	619DAX4428	58600
2.50	5130	1.01	618DBX4328	41700
2.50	5130	1.60	619DAX4328	58600
2.67	4820	1.07	618DBX4228	41700
2.67	4820	1.71	619DAX4228	58600
2.96	4340	1.19	618DBX3928	41700
2.96	4340	1.89	619DAX3928	58600
3.29	3900	0.83	617DCX3728	29500
3.29	3900	1.32	618DBX3728	41700
3.29	3900	2.11	619DAX3728	58600
3.71	3460	0.94	617DCX3528	29500
3.71	3460	1.49	618DBX3528	41700
3.92	3280	0.99	617DCX3428	29500
3.92	3280	1.58	618DBX3428	41700
4.39	2930	1.11	617DCX3228	29500
4.39	2930	1.76	618DBX3228	41700
5.13	2500	0.87	616DBX3028	22100
5.13	2500	1.30	617DCX3028	29500
5.13	2500	2.06	618DBX3028	41700
6.06	2120	1.02	616DBX2828	22100
6.06	2120	1.53	617DCX2828	29500
7.18	1790	1.21	616DBX2628	22100
7.18	1790	1.82	617DCX2628	29500
8.48	1510	0.93	614DCX2328	16000
8.48	1510	1.43	616DBX2328	22100
8.48	1510	2.15	617DCX2328	29500
9.80	1310	1.08	614DCX2228	16000
9.80	1310	1.65	616DBX2228	22100
11.6	1110	0.87	613DBX2128	14700
11.6	1110	1.20	614DCX2128	16000
11.6	1110	1.95	616DBX2128	22100
13.5	954	1.02	613DBX2028	14700
13.5	954	1.48	614DCX2028	16000
16.1	843	1.10	613X1728	13100
16.1	843	1.44	614X1728	16000
19.7	688	1.35	613X1628	12200
19.7	688	1.75	614X1628	16000
23.7	571	1.08	612X1528	8330
23.7	571	1.63	613X1528	11500
27.5	494	1.31	612X1428	9480
27.5	494	1.81	613X1428	11000
32.6	416	1.01	611X1328	6670
32.6	416	1.56	612X1328	9650
40.0	339	0.80	610X1228	4920
40.0	339	1.21	611X1228	6460
40.0	339	1.92	612X1228	9040
48.3	281	1.06	610X1128	4980
48.3	281	1.48	611X1128	6440
56.0	242	1.10	610X1028	4990
56.0	242	1.50	611X1028	6300
66.7	203	1.00	609X0928	3330
66.7	203	1.50	610X0928	5060
82.4	165	1.00	609X0828	3340
82.4	165	1.60	610X0828	5060
93.3	145	1.00	609X0728	3340
93.3	145	2.10	610X0728	5000
107.7	126	1.00	609X0628	3340
93.3	145	2.10	610X0728	5000
107.7	126	1.00	609X0628	3340
107.7	126	2.10	610X0628	4730
127.3	107	1.00	609X0528	3340
127.3	107	2.10	610X0528	4550
175.0	78	1.00	609X0428	3340
175.0	78	2.10	610X0428	4010
233.3	58	1.00	609X0328	3340
233.3	58	2.10	610X0328	3600

2.2 KW MOTOR

Speed Rev/Min	Output Torque Nm	Service Factor	Unit Selection	Overhung Load N
1.94	9840	0.84	619DAX4636	58600
2.19	8730	0.94	619DAX4536	58600
2.39	8010	1.03	619DAX4436	58600
2.54	7520	1.09	619DAX4336	58600
2.70	7070	1.16	619DAX4236	58600
3.00	6370	0.81	618DBX3936	41700
3.00	6370	1.29	619DAX3936	58600
3.34	5720	0.90	618DBX3736	41700
3.34	5720	1.44	619DAX3736	58600
3.77	5070	1.02	618DBX3536	41700
3.77	5070	1.62	619DAX3536	58600
3.98	4800	1.07	618DBX3436	41700
3.98	4800	1.71	619DAX3436	58600
4.45	4290	1.20	618DBX3236	41700
4.45	4290	1.90	619DAX3236	58600
5.20	3670	0.90	617DCX3036	29500
5.20	3670	1.40	618DBX3036	41700
6.15	3110	1.10	617DCX2836	29500
6.15	3110	1.70	618DBX2836	41700
7.28	2620	0.80	616DBX2636	22100
7.28	2620	1.20	617DCX2636	29500
7.28	2620	1.90	618DBX2636	41700
8.61	2220	1.00	616DBX2336	22100
8.61	2220	1.50	617DCX2336	29500
9.90	1920	1.10	616DBX2236	22100
9.90	1920	1.70	617DCX2236	29500
11.7	1630	0.80	614DCX2136	16000
11.7	1630	1.30	616DBX2136	22100
11.7	1630	2.00	617DCX2136	29500
13.7	1400	1.01	614DCX2036	16000
13.7	1400	1.53	616DBX2036	22100
13.7	1400	1.55	616DCX2036	22100
13.7	1400	2.27	617DCX2036	29500
16.3	1240	0.98	614X1736	16000
16.3	1240	1.71	616X1736	22100
20.0	1010	0.92	613X1636	12000
20.0	1010	1.19	614X1636	16000
20.0	1010	2.15	616X1636	22100
24.1	838	1.11	613X1536	11300
24.1	838	1.45	614X1536	16000
27.8	724	0.90	612X1436	4470
27.8	724	1.16	613X1436	10800
27.8	724	1.68	614X1436	15500
33.0	611	1.06	612X1336	7600
33.0	611	1.52	613X1336	10400
40.6	497	0.82	611X1236	6320
40.6	497	1.31	612X1236	9810
40.6	497	1.87	613X1236	9740
49.0	412	1.01	611X1136	6330
49.0	412	1.58	612X1136	8420
56.8	355	1.01	611X1036	6200
56.8	355	1.80	612X1036	8040
67.6	298	1.04	610X0936	4980
67.6	298	1.41	611X0936	6120
83.5	241	1.12	610X0836	4990
83.5	241	1.77	611X0836	5790
94.7	213	1.45	610X0736	4930
94.7	213	1.77	611X0736	5740
109.2	185	1.45	610X0636	4670
109.2	185	1.77	611X0636	5390
129.1	156	1.45	610X0536	4500
129.1	156	1.78	611X0536	5220
177.5	114	1.45	610X0436	3970
177.5	114	1.78	611X0436	4570
236.7	85	1.45	610X0336	3570
236.7	85	1.78	611X0336	4100

3.0 KW MOTOR

Speed Rev/Min	Output Torque Nm	Service Factor	Unit Selection	Overhung Load N
560	17	2.6	743A0120	1251
2.52	10110	0.81	619DAX4338	58600
2.69	9500	0.85	619DAX4238	58600
2.98	8560	0.95	619DAX3938	58600
3.32	7690	1.05	619DAX3738	58600
3.74	6820	1.19	619DAX3538	58600
3.95	6460	1.25	619DAX3438	58600
4.42	5770	0.88	618DBX3238	41700

3.0 KW MOTOR

Speed Rev/Min	Output Torque Nm	Service Factor	Unit Selection	Overhung Load N
4.42	5770	1.40	619DAX3238	58600
5.16	4940	1.03	618DBX3038	41700
5.16	4940	1.64	619DAX3038	58600
6.10	4180	1.22	618DBX2838	41700
6.10	4180	1.94	619DAX2838	58600
7.23	3530	0.91	617DCX2638	29500
7.23	3530	1.42	618DBX2638	41700
8.55	2990	1.07	617DCX2338	29500
8.55	2990	1.68	618DBX2338	41700
9.86	2590	0.83	616DCX2238	22100
9.86	2590	1.24	617DCX2238	29500
9.86	2590	1.93	618DBX2238	41700
11.7	2190	0.98	616DCX2138	22100
11.7	2190	1.46	617DCX2138	29500
13.6	1880	1.14	616DCX2038	22100
13.6	1880	1.70	617DCX2038	29500
16.2	1660	1.26	616X1738	22100
19.9	1360	0.87	614X1638	16000
19.9	1360	1.58	616X1638	22100
23.9	1130	0.81	613X1538	11100
23.9	1130	1.06	614X1538	16000
23.9	1130	1.90	616X1538	22100
27.6	974	0.85	613X1438	10600
27.6	974	1.23	614X1438	15400
32.8	821	1.12	613X1338	10300
32.8	821	1.56	614X1338	15500
40.3	668	0.96	612X1238	6020
40.3	668	1.37	613X1238	9630
40.3	668	2.09	614X1238	15400
48.6	554	1.16	612X1138	8300
48.6	554	1.63	613X1138	9180
56.4	477	1.32	612X1038	7940
56.4	477	1.92	613X1038	8750
67.1	401	1.04	611X0938	6020
67.1	401	1.60	612X0938	7530
82.9	325	1.30	611X0838	5720
82.9	325	1.89	612X0838	7060
94.0	286	1.30	611X0738	5670
94.0	286	1.97	612X0738	6810
108.5	248	1.30	611X0638	5330
108.5	248	1.97	612X0638	6480
128.2	210	1.31	611X0538	5160
128.2	210	1.97	612X0538	6150
176.3	153	1.31	611X0438	4530
176.3	153	2.32	612X0438	5550
235.0	115	1.31	611X0338	4070
235.0	115	2.32	612X0338	5060

4.0 KW MOTOR

Speed Rev/Min	Output Torque Nm	Service Factor	Unit Selection	Overhung Load N
3.79	9130	0.89	619DAX3546	58600
4.01	8640	0.94	619DAX3446	58600
4.48	7720	1.05	619DAX3246	58600
5.24	6610	1.23	619DAX3046	58600
6.19	5590	0.91	618DBX2846	41700
6.19	5590	1.45	619DAX2846	58600
7.33	4720	1.06	618DBX2646	41700
7.33	4720	1.41	619DAX2646	58600
7.33	4720	1.71	619DBX2646	59000
8.67	3990	0.81	617DCX2346	29500
8.67	3990	1.26	618DBX2346	41700
8.67	3990	2.02	619DBX2346	59000
10.0	3460	0.93	617DCX2246	29500
10.0	3460	1.45	618DBX2246	41700
11.8	2930	1.10	617DCX2146	29500
11.8	2930	1.68	618DBX2146	41700
13.8	2520	0.85	616DCX2046	22100
13.8	2520	1.28	617DCX2046	29500
13.8	2520	1.99	618DBX2046	41700
16.4	2220	0.94	616X1746	21600
20.1	1810	1.18	616X1646	22100
24.2	1510	1.42	616X1546	22100
28.0	1300	0.93	614X1446	14500
28.0	1300	1.65	616X1446	21000
33.3	1100	0.84	613X1346	10100
33.3	1100	1.17	614X1346	15200
33.3	1100	1.95	616X1346	20300

Cyclo Gearboxes : Motorised selection

Speed Rev/Min	Output Torque Nm	Service Factor	Unit Selection	Overhung Load N
40.9	894	1.03	613X1246	9490
40.9	894	1.57	614X1246	15300
49.3	741	0.87	612X1146	3320
49.3	741	1.22	613X1146	9070
49.3	741	1.88	614X1146	14300
57.2	639	0.98	612X1046	6850
57.2	639	1.44	613X1046	8650
57.2	639	1.98	614X1046	14000
68.1	537	1.20	612X0946	7420
68.1	537	1.68	613X0946	8340
84.1	434	0.98	611X0846	5610
84.1	434	1.42	612X0846	6970
95.3	383	0.98	611X0746	5570
95.3	383	1.48	612X0746	6730
110.0	332	0.98	611X0646	5250
110.0	332	1.48	612X0646	6400
130.0	281	0.98	611X0546	5090
130.0	281	1.48	612X0546	6090
178.8	178	1.12	611X0446	4480
178.8	178	2.00	612X0446	5510
238.3	153	0.98	611X0346	4040
238.3	153	1.74	612X0346	5020

5.5 KW MOTOR

Speed Rev/Min	Output Torque Nm	Service Factor	Unit Selection	Overhung Load N
7.49	6450	1.24	619DBX2654	59000
8.85	5450	0.92	618DBX2354	41700
8.85	5450	1.47	619DBX2354	59000
10.2	4730	1.05	618DBX2254	41700
10.2	4730	1.64	619DBX2254	59000
12.1	4000	1.22	618DBX2154	41700
12.1	4000	1.92	619DBX2154	59000
14.0	3440	1.45	618DBX2054	41700
20.6	2480	0.86	616X1654	22100
24.7	2060	1.03	616X1554	22100
28.6	1780	1.20	616X1454	20800
34.0	1500	0.85	614X1354	13700
34.0	1500	1.42	616X1354	20000
41.7	1220	1.14	614X1254	15000
41.7	1220	1.74	616X1254	18800
50.3	1010	0.89	613X1154	8880
50.3	1010	1.37	614X1154	14200
50.3	1010	2.07	616X1154	17800
58.4	872	1.05	613X1054	8490
58.4	872	1.44	614X1054	13900
69.5	733	1.20	613X0954	8210
69.5	733	1.70	614X0954	13300
85.9	593	1.50	613X0854	7720
97.3	523	1.61	613X0754	7210
112.3	454	1.90	613X0654	7080
132.7	384	2.10	613X0554	6810
182.5	279	2.10	613X0454	5980
243.3	209	2.10	613X0354	5370

7.5 KW MOTOR

Speed Rev/Min	Output Torque Nm	Service Factor	Unit Selection	Overhung Load N
7.49	8670	0.91	619DBX2656	59000
8.85	7330	1.08	619DBX2356	59000
10.2	6360	1.20	619DBX2256	59000
12.1	5380	0.89	618DBX2156	41700
12.1	5380	1.41	619DBX2156	59000
14.0	4620	1.06	618DBX2056	41700
14.0	4620	1.59	619DBX2056	59000
28.6	2390	0.88	616X1456	20400
34.0	2020	1.04	616X1356	19700
41.7	1640	0.84	614X1256	13100
41.7	1640	1.28	616X1256	18600
50.3	1360	1.01	614X1156	14100
50.3	1360	1.52	616X1156	17600
58.4	1170	1.06	614X1056	13800
58.4	1170	1.79	616X1056	16900
69.5	985	0.90	613X0956	8020
69.5	985	1.27	614X0956	13200
69.5	985	2.13	616X0956	16200

Speed Rev/Min	Output Torque Nm	Service Factor	Unit Selection	Overhung Load N
85.9	798	1.11	613X0856	7580
85.9	798	1.60	614X0856	12400
85.9	798	2.51	616X0856	15100
97.3	704	1.20	613X0756	7090
97.3	704	1.93	614X0756	11900
112.3	610	1.36	613X0656	6970
112.3	610	2.01	614X0656	11400
132.7	516	1.51	613X0556	6710
132.7	516	2.01	614X0556	11100
182.5	375	1.51	613X0456	5890
182.5	375	2.02	614X0456	9910
243.3	282	1.51	613X0356	5300
243.3	282	2.01	614X0356	8950

11.0 KW MOTOR

Speed Rev/Min	Output Torque Nm	Service Factor	Unit Selection	Overhung Load N
41.7	2410	0.87	616X1266	18100
50.3	2000	1.04	616X1166	17200
58.4	1720	1.22	616X1066	16600
69.5	1450	1.45	616X0966	15900
85.9	1170	1.71	616X0866	14900
97.3	1030	2.04	616X0766	14500
112.3	895	2.08	616X0666	13700

15.0 KW MOTOR

Speed Rev/Min	Output Torque Nm	Service Factor	Unit Selection	Overhung Load N
58.0	2330	0.90	616X1068	16200
69.0	1960	1.07	616X0968	15600
85.3	1580	1.27	616X0868	14600
96.7	1400	1.50	616X0768	14200
112	1210	1.52	616X0668	13500
132	1030	1.61	616X0568	12900
181	746	1.61	616X0468	11400
242	559	1.61	616X0368	10200

Larger power selections are also possible using integrated motors or by means of the alternate IEC adapter detailed on page 376.

Please consult your local authorised distributor for assistance on selections outside the range shown above.

Selection tables show part numbers for the preferred "dry-fit" IEC geared motor option.

Please refer to page 379 for coding of alternate mounting configurations.

0.1570 RPM 9,251:1 RATIO

Output Torque	Motor Power	Unit Selection	Overhung Load N
30	0.12	606TAX6748	1180
60	0.12	607TAX6748	1770
200	0.12	609TAX6748	3340
300	0.12	610TAX6748	5400
630	0.18	612TAX6702	6740
940	0.18	613TAX6702	14500
1370	0.18	614TAX6702	16000
2100	0.25	616TAX6706	22100
3150	0.37	617TAX6708	29500
5000	0.37	618TAX6708	41700
7960	0.75	619TBX6718	58400

0.1330RPM RPM 10,933:1 RATIO

Output Torque	Motor Power	Unit Selection	Overhung Load N
30	0.12	606TAX6848	1180
60	0.12	607TAX6848	1770
200	0.12	609TAX6848	3340
300	0.12	610TAX6848	5400
630	0.18	612TAX6802	6740
940	0.18	613TAX6802	14500
1370	0.18	614TAX6802	16000
2100	0.18	616TAX6802	22100
3150	0.37	617TAX6808	29500
5000	0.37	618TAX6808	41700
7960	0.75	619TBX6818	58400

0.1060RPM 13,629:1 RATIO

Output Torque	Motor Power	Unit Selection	Overhung Load N
57	0.12	607TAX6948	1770
146	0.12	609TAX6948	3340
296	0.12	610TAX6948	5400
630	0.12	612TAX6948	6740
1050	0.18	613TAX6902	14500
1370	0.18	614TAX6902	16000
2100	0.18	616TAX6902	22100
3150	0.37	617TAX6908	29500
5000	0.37	618TAX6908	41700
7960	0.75	619TBX6918	58400

0.0894RPM 16,211:1 RATIO

Output Torque	Motor Power	Unit Selection	Overhung Load N
30	0.12	606TAX7048	1180
60	0.12	607TAX7048	1770
200	0.12	609TAX7048	3340
300	0.12	610TAX7048	5400
630	0.12	612TAX7048	6740
940	0.18	613TAX7002	14500
1370	0.18	614TAX7002	16000
2100	0.18	616TAX7002	22100
3150	0.37	617TAX7008	29500
5000	0.37	618TAX7008	41700
7960	0.75	619TBX7018	58400

0.0713RPM 20,339:1 RATIO

Output Torque	Motor Power	Unit Selection	Overhung Load N
30	0.12	606TAX7148	1180
60	0.12	607TAX7148	1770
200	0.12	609TAX7148	3340
300	0.12	610TAX7148	5400
630	0.12	612TAX7148	6740
940	0.18	613TAX7102	14500
1370	0.18	614TAX7102	16000
2100	0.18	616TAX7102	22100
3150	0.18	617TAX7102	29500
5000	0.37	618TAX7108	41700
7960	0.37	619TAX7108	58400

Cyclo Gearboxes : Motorised selection

0.0603RPM 24,037:1 RATIO

Output Torque	Motor Power	Unit Selection	Overhung Load N
30	0.12	606TAX7248	1180
60	0.12	607TAX7248	1770
200	0.12	609TAX7248	3340
300	0.12	610TAX7248	5400
630	0.12	612TAX7248	6740
940	0.18	613TAX7202	14500
1370	0.18	614TAX7202	16000
2100	0.18	616TAX7202	22100
3150	0.18	617TAX7202	29500
5000	0.18	618TAX7202	41700
7960	0.37	619TAX7208	58400

0.0461RPM 31,4331: RATIO

Output Torque	Motor Power	Unit Selection	Overhung Load N
57	0.12	607TAX7348	1770
146	0.12	609TAX7348	3340
296	0.12	610TAX7348	5400
630	0.12	612TAX7348	6740
1050	0.18	613TAX7302	14500
1370	0.18	614TAX7302	16000
2100	0.18	616TAX7302	22100
3150	0.18	617TAX7302	29500
5000	0.18	618TAX7302	41700
7960	0.37	619TAX7308	58400

0.0379RPM 38,291:1 RATIO

Output Torque	Motor Power	Unit Selection	Overhung Load N
146	0.12	609TAX7548	3340
296	0.12	610TAX7548	5400
630	0.12	612TAX7548	6740
1050	0.18	613TAX7502	14500
1370	0.18	614TAX7502	16000
2100	0.18	616TAX7502	22100
3150	0.18	617TAX7502	29500
5000	0.18	618TAX7502	41700
7960	0.37	619TAX7508	58400

0.0894RPM 16,211:1 RATIO

Output Torque	Motor Power	Unit Selection	Overhung Load N
57	0.12	607TAX7648	1770
146	0.12	609TAX7648	3340
296	0.12	610TAX7648	5400
630	0.12	612TAX7648	6740
1050	0.18	613TAX7602	14500
1370	0.18	614TAX7602	16000
2100	0.18	616TAX7602	22100
3150	0.18	617TAX7602	29500
5000	0.18	618TAX7602	41700
7960	0.37	619TAX7608	58400

0.0270RPM 53,621:1 RATIO

Output Torque	Motor Power	Unit Selection	Overhung Load N
30	0.12	606TAX7748	1180
60	0.12	607TAX7748	1770
200	0.12	609TAX7748	3340
300	0.12	610TAX7748	5400
630	0.12	612TAX7748	6740
940	0.18	613TAX7702	14500
1370	0.18	614TAX7702	16000
2100	0.18	616TAX7702	22100
3150	0.18	617TAX7702	29500
5000	0.18	618TAX7702	41700
7960	0.37	619TAX7708	58400

0.0245RPM 59,177:1 RATIO

Output Torque	Motor Power	Unit Selection	Overhung Load N
146	0.12	609TAX7848	3340
296	0.12	610TAX7848	5400
630	0.12	612TAX7848	6740
1050	0.18	613TAX7802	14500
1370	0.18	614TAX7802	16000
2100	0.18	616TAX7802	22100
3150	0.18	617TAX7802	29500
5000	0.18	618TAX7802	41700
7960	0.37	619TAX7808	58400

0.0245RPM 59,177:1 RATIO

Output Torque	Motor Power	Unit Selection	Overhung Load N
57	0.12	607TAX7948	1770
146	0.12	609TAX7948	3340
296	0.12	610TAX7948	5400
630	0.12	612TAX7948	6740
1050	0.18	613TAX7902	14500
1370	0.18	614TAX7902	16000
2100	0.18	616TAX7902	22100
3150	0.18	617TAX7902	29500
5000	0.18	618TAX7902	41700
7960	0.37	619TAX7908	58400

0.0182RPM 79,507:1 RATIO

Output Torque	Motor Power	Unit Selection	Overhung Load N
30	0.12	606TAX8048	1180
60	0.12	607TAX8048	1770
200	0.12	609TAX8048	3340
300	0.12	610TAX8048	5400
630	0.12	612TAX8048	6740
940	0.18	613TAX8002	14500
1370	0.18	614TAX8002	16000
2100	0.18	616TAX8002	22100
3150	0.18	617TAX8002	29500
5000	0.18	618TAX8002	41700
7960	0.18	619TAX8002	58400

0.0133RPM 109,091:1 RATIO

Output Torque	Motor Power	Unit Selection	Overhung Load N
57	0.12	607TAX8148	1770
146	0.12	609TAX8148	3340
296	0.12	610TAX8148	5400
630	0.12	612TAX8148	6740
1050	0.18	613TAX8102	14500
1370	0.18	614TAX8102	16000
2100	0.18	616TAX8102	22100
3150	0.18	617TAX8102	29500
5000	0.18	618TAX8102	41700
7960	0.18	619TAX8102	58400

0.0097RPM 149,683:1 RATIO

Output Torque	Motor Power	Unit Selection	Overhung Load N
146	0.12	609TAX8248	3340
296	0.12	610TAX8248	5400
630	0.12	612TAX8248	6740
1050	0.18	613TAX8202	14500
1370	0.18	614TAX8202	16000
2100	0.18	616TAX8202	22100
3150	0.18	617TAX8202	29500
5000	0.18	618TAX8202	41700
7960	0.18	619TAX8202	58400
7960	0.18	619TAX8102	58400

0.0033RPM 446,571:1 RATIO

Output Torque	Motor Power	Unit Selection	Overhung Load N
630	0.12	612TBX8348	6740
979	0.18	613TBX8302	14500
1250	0.18	614TBX8302	16000
2050	0.18	616TAX8302	22100
3150	0.18	617TAX8302	29500
5000	0.18	618TAX8302	41700
7960	0.18	619TAX8302	58400

0.0022RPM 658,503:1 RATIO

Output Torque	Motor Power	Unit Selection	Overhung Load N
2050	0.18	616TDX8402	22100
3150	0.18	617TDX8402	29500
5000	0.18	618TCX8402	41700
7960	0.18	619TBX8402	58400

Cyclo Gearboxes : Dimensions (IEC) Foot Mounted

FOOT MOUNTING (TYPE X)

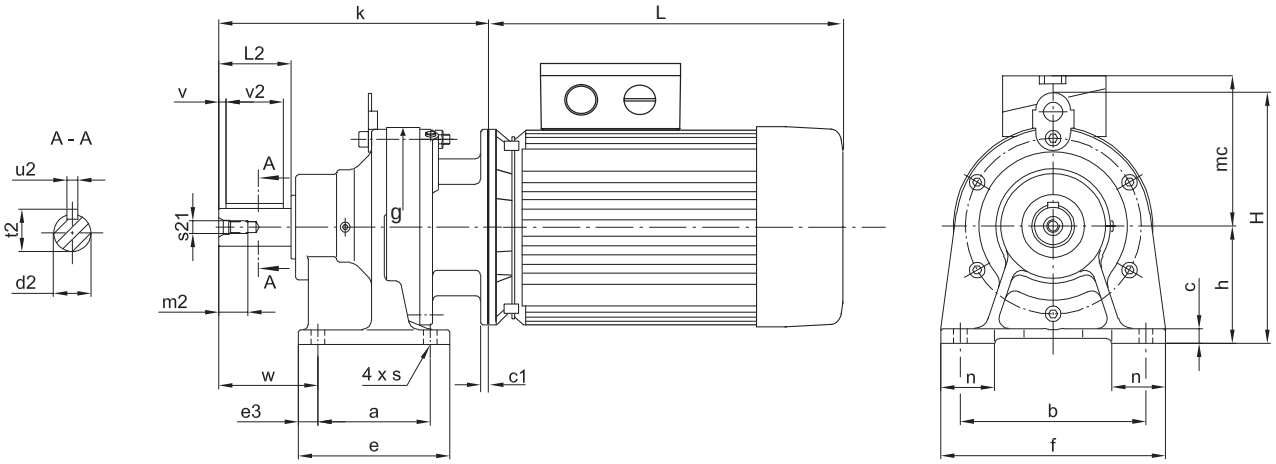

Unit Size	a	b	c	Ød2	e	e3	f	Øg	h	H	L2	m2	n	s	s21	t2	u2	v	v2	w	Weight ~kg
606	60	120	10	14k6	84	12	144	110	80	-	30	12	48	Ø9	M5	12	5	2.5	25	46	4.5
607	60	120	10	20k6	84	12	144	110	80	-	40	15	48	Ø9	M6	23	6	4	32	57	4.5
608	75	120	13	25k6	99	12	144	134	90	-	50	22	49	Ø9	M10	28	8	3.5	40	67	12
609	90	150	12	25k6	135	15	180	150	100	-	50	22	65	Ø11	M10	28	8	3.5	40	75	12
610	90	150	12	30k6	135	15	180	150	100	-	60	22	40	Ø11	M10	33	8	3.5	50	85	17
611	90	150	12	35k6	135	15	180	162	120	-	70	28	45	Ø11	M12	38	10	7	56	95	20
612	115	190	15	35k6	155	20	230	204	120	257	70	28	55	Ø14	M12	38	10	7	56	97	32
613	145	290	22	50k6	195	25	330	230	150	300	100	36	65	Ø18	M16	54	14	10	80	130	53
614	145	290	22	50k6	195	25	330	230	150	300	100	36	65	Ø18	M16	54	14	10	80	130	54
616	150	370	25	60h6	238	44	410	300	160	367	90	18	75	Ø18	M10	64	18	-	80	139	98

All dimensions are in mm ~ Gearbox kg refers to the approximate weight without motor - see table below for additional motor weight

MOTOR OPTIONS AVAILABLE (using 4 pole motors)

Unit Size	kW	Frame	IEC	c1	k	L	mc	Motor kg
606	0.12	63K	B5	11	154	192	98	3.5
	0.18	63G	B5	11	154	192	98	4.0
	0.25	71K	B5	11	154	210	126	6.1
607	0.12	63K	B5	11	165	192	98	3.5
	0.18	63G	B5	11	165	192	98	4.0
	0.25	71K	B5	11	165	210	126	6.1
	0.37	71J	B5	11	165	210	126	6.7
608	0.12	63K	B5	11	201	192	98	3.5
	0.18	63G	B5	11	201	192	98	4.0
	0.25	71K	B5	11	206	210	126	6.1
	0.37	71J	B5	11	206	210	126	6.7
	0.55	80K	B5	12	223	255	142	8.9
	0.75	80G	B5	12	223	255	142	9.6
	1.10	90S	B5	12	223	265	160	13.8
609	0.12	63K	B5	11	217	192	98	3.5
	0.18	63G	B5	11	217	192	98	4.0
	0.25	71K	B5	11	217	210	126	6.1
	0.37	71J	B5	11	217	210	126	6.7
	0.55	80K	B5	12	243	255	142	8.9
	0.75	80G	B5	12	243	255	142	9.6
	1.10	90S	B5	13	243	265	160	13.8
	1.50	90L	B5	13	243	290	160	16.5
610	0.25	71K	B5	11	241	210	126	6.1
	0.37	71J	B5	11	241	210	126	6.7
	0.55	80K	B5	13	267	255	142	8.9
	0.75	80G	B5	13	267	255	142	9.6
	1.10	90S	B5	13	267	265	160	13.8
	1.50	90L	B5	13	267	290	160	16.5
	2.20	100L	B14	14	277	325	165	21.5
611	0.37	71J	B5	11	256	210	126	6.7
	0.55	80K	B5	12	278	255	142	8.9
	0.75	80G	B5	12	278	255	142	9.6
	1.10	90S	B5	12	278	265	160	13.8
	1.50	90L	B5	12	278	290	160	16.5
	2.20	100L	B5	14	287	325	165	21.5
	3.00	100Lx	B5	14	287	325	165	25.3
	4.00	112M	B5	14	287	335	188	32.0

Unit Size	kW	Frame	IEC	c1	k	L	mc	Motor kg
612	0.55	80K	B5	13	279	255	142	8.9
	0.75	80G	B5	13	279	255	142	9.6
	1.10	90S	B5	13	279	265	160	13.8
	1.50	90L	B5	13	279	290	160	16.5
	2.20	100L	B5	14	289	325	165	21.5
	3.00	100Lx	B5	14	289	325	165	25.3
	4.00	112M	B5	14	289	335	188	32.0
613	0.75	80G	B5	11	351	255	142	9.6
	1.10	90S	B5	11	351	265	160	13.8
	1.50	90L	B5	11	351	290	160	16.5
	2.20	100L	B5	13	361	325	165	21.5
	3.00	100Lx	B5	13	361	325	165	25.3
	4.00	112M	B5	13	361	335	188	32.0
	5.50	132S	B5	17	387	392	208	47.0
	7.50	132M	B5	17	387	430	208	58.0
614	0.75	80G	B5	11	351	255	142	9.6
	1.10	90S	B5	11	351	265	160	13.8
	1.50	90L	B5	11	351	290	160	16.5
	2.20	100L	B5	13	361	325	165	21.5
	3.00	100Lx	B5	13	361	325	165	25.3
	4.00	112M	B5	13	361	335	188	32.0
	5.50	132S	B5	17	387	392	208	47.0
	7.50	132M	B5	17	387	430	208	58.0
615	2.20	100L	B5	14	394	325	165	21.5
	3.00	100Lx	B5	14	394	325	165	25.3
	4.00	112M	B5	14	394	335	188	32.0
	5.50	132S	B5	16	416	392	208	47.0
	7.50	132M	B5	16	416	430	208	58.0
	11.00	160M	B5	16	452	490	252	125.0
	15.00	160L	B5	16	452	550	252	146.0

Cyclo Gearboxes : Alternate Mounting Arrangements

FLANGE MOUNTING (TYPE Y)

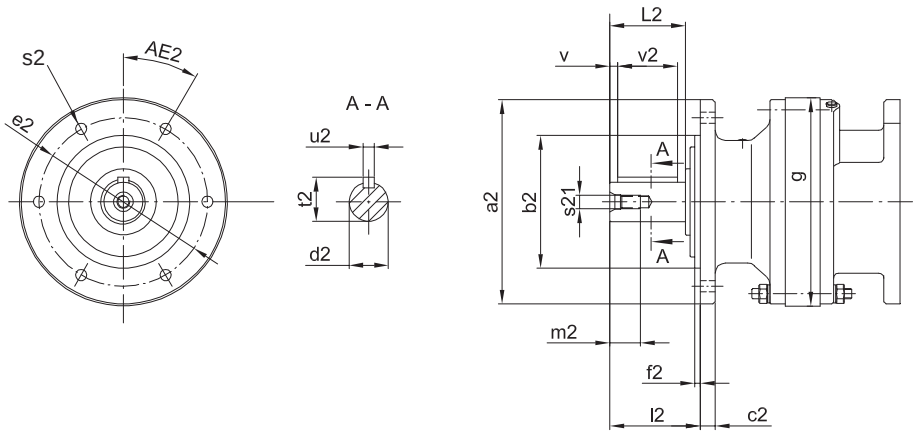

All sizes have 6 holes on the flange with the exception of sizes 607, 608, 609 & 610 which have 4.

Unit Size	Øa2	Øb2	c2	Ød2	Øe2	f2	Øg	l2	L2	m2	s2	s21	t2	u2	v	v2	AE2	kg
606	120	80 j6	8	14k6	100	3	110	39	30	12	9	M5	16.0	5	2.5	25	30°	5.5
607	160	110 j6	9	20k6	130	3	110	52	40	15	11	M6	22.5	6	4.0	32	45°	6.5
608	160	110 j6	9	25k6	130	3	134	63	50	22	11	M10	28.0	8	3.5	40	45°	13
609	160	110 j6	9	25k6	130	3	150	63	50	22	11	M10	28.0	8	3.5	40	45°	13
610	160	110 j6	9	30k6	130	3	150	73	60	22	11	M10	33.0	8	3.5	50	45°	15
611	200	130 j6	11	35k6	165	4	162	83	70	28	11	M12	38.0	10	7.0	56	30°	18
612	200	130 j6	13	35k6	165	4	204	84	70	28	11	M12	38.0	10	7.0	56	30°	31
613	260	200 f8	15	50k6	230	4	230	106	100	36	11	M16	53.5	14	10	80	0°	52
614	260	200 f8	15	50k6	230	4	230	106	100	36	11	M16	53.5	14	10	80	0°	53
616	340	270 f8	20	60h6	310	4	300	89	90	18	11	M10	64.0	18	0	80	0°	95

FLANGE MOUNTING (TYPE Z)

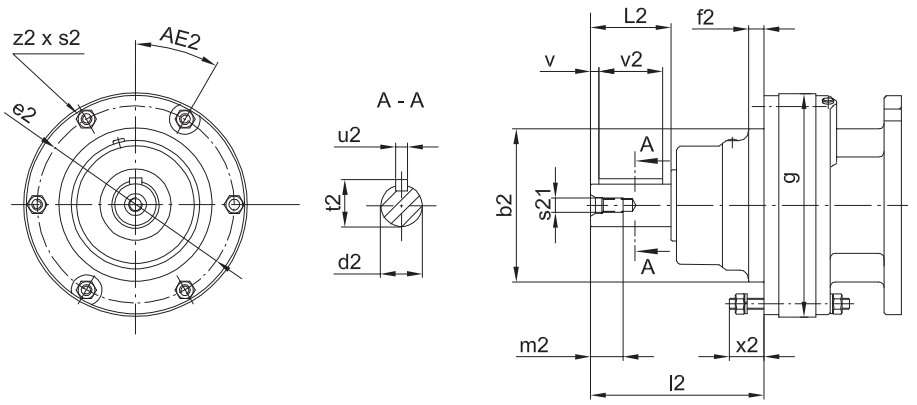

Unit Size	Øb2	Ød2	Øe2	f2	Øg	l2	L2	m2	s2	s21	t2	u2	v	v2	x2	z2	AE2	kg
606	80 g6	14k6	98	4	110	73	30	12	M6	M5	16.0	5	2.5	25	21	6	0°	5
607	80 g6	20k6	98	4	110	84	40	15	M6	M6	22.5	6	4.0	32	21	6	0°	5
608	95 g6	25k6	118	5	134	106	50	22	M8	M10	28.0	8	3.5	40	27	8	22.5°	12
609	105 g6	25k6	134	6	150	129	50	22	M8	M10	28.0	8	3.5	40	29	8	22.5°	12
610	105 g6	30k6	134	6	150	139	60	22	M8	M10	33.0	8	3.5	50	28	8	22.5°	14
611	115 g6	35k6	146	6	162	143	70	28	M8	M12	38.0	10	7.0	56	28	8	22.5°	16
612	140 g6	35k6	180	14	204	154	70	28	M10	M12	38.0	10	7.0	56	30	6	0°	28
613	165 g6	50k6	205	16	230	208	100	36	M10	M16	53.5	14	10	80	31	6	0°	47
614	165 g6	50k6	205	16	230	208	100	36	M10	M16	53.5	14	10	80	31	6	0°	48
616	200 g6	60h6	270	10	300	222	90	18	M12	M10	64.0	18	-	80	35	6	30°	84

TECHNICAL NOTES

Tolerances according to DIN ISO 286 part 2.
Keys and keyways according to DIN 6885

MOUNTING POSTIONS

Foot mounted and Flange mounted units from size 606-612 are grease lubricated for life and suitable for any mounting position.

Units from size 613 - 616 are oil lubricated for Horizontal and vertical mounting.

Size 616 requires an additional oil pump and circulating pipe when used in the vertical position - please consult your local Authorised Distributor.

Size 613-616 Flange mounted units use special Ring Gear Housings.

FOOT MOUNTED

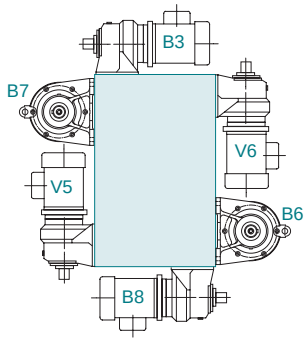

Horizontal Mounting
Approximate oil quantity (litres)

	B3	B6	B7	B8
613	0.7	0.7	0.7	0.7
614	0.7	0.7	0.7	0.7
616	1.4	1.4	1.4	1.4

Vertical Mounting

	V5	V6
613	Please consult	
614	your local Authorised	
616	Distributor	

FLANGE MOUNTED

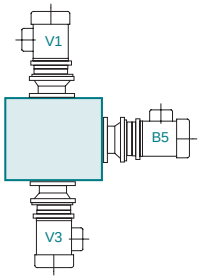

	B5	V1	V3
613	Please consult		
614	your local Authorised		
616	Distributor		

Cyclo Gearboxes : Dimensions (IEC) Foot Mounted

FOOT MOUNTING (TYPE DAX / DBX / DCX)

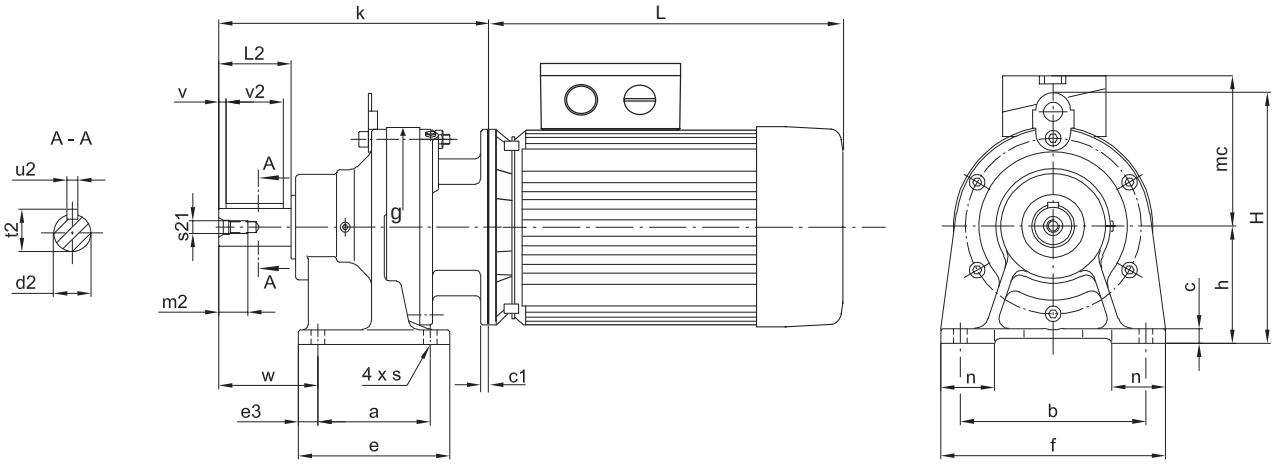

Unit Size	a	b	c	Ød2	e	e3	f	Øg	h	H	L2	m2	n	s	s21	t2	u2	v	v2	w	Weight ~kg
606DA	60	120	10	14k6	84	12	144	110	80	-	30	12	48	9	M5	16	5	2.5	25	46	6
607DA	60	120	10	20k6	84	12	144	110	80	-	40	15	48	9	M6	23	6	4	32	57	7
609DA	90	150	12	25k6	135	15	180	150	100	-	50	22	65	11	M10	28	8	3.5	40	75	14
610DA	90	150	12	30k6	135	15	180	150	100	-	60	22	40	11	M10	33	8	3.5	50	85	17
612DA	115	190	15	35k6	155	20	230	204	120	257	70	28	55	14	M12	38	10	7	56	97	28
612DB	115	190	15	35k6	155	20	230	204	120	257	70	28	55	14	M12	38	10	7	56	97	34
613DB	145	290	22	50k6	195	25	330	230	150	300	100	36	65	18	M16	53.5	14	10	80	130	50
613DC	145	290	22	50k6	195	25	330	230	150	300	100	36	65	18	M16	53.5	14	10	80	130	50
614DC	145	290	22	50k6	195	25	330	230	150	300	100	36	65	18	M16	53.5	14	10	80	130	50
616DB	150	370	25	60h6	238	44	410	300	160	353	90	18	75	18	M10	64	18	0	80	139	90
616DC	150	370	25	60h6	238	44	410	300	160	353	90	18	75	18	M10	64	18	0	80	139	100
617DC	275	380	30	70h6	335	30	430	340	200	418	90	24	80	22	M12	74.5	20	0	80	125	133
618DB	320	420	30	80h6	380	30	470	370	220	451	110	24	85	22	M12	85	22	0	100	145	190
619DA	380	480	35	95h6	440	30	530	430	250	531	135	34	90	26	M20	100	25	0	125	170	250
619DB	380	480	35	95h6	440	30	530	430	250	531	135	34	90	26	M20	100	25	0	125	170	260

All dimensions are in mm ~ Gearbox kg refers to the approximate weight without motor - see table below for additional motor weight

MOTOR OPTIONS AVAILABLE (using 4 pole motors)

Unit Size	kW	Frame	IEC	c1	k	L	mc	Motor kg
606DA	0.12	63K	B5	11	188	192	98	3.5
	0.18	63G	B5	11	188	192	98	4.0
607DA	0.12	63K	B5	11	199	192	98	3.5
	0.18	63G	B5	11	199	192	98	4.0
609DA	0.12	63K	B5	11	263	192	98	3.5
	0.18	63G	B5	11	263	192	98	4.0
	0.25	71K	B5	11	263	210	126	6.1
	0.37	71J	B5	11	263	210	126	6.7
610DA	0.12	63K	B5	11	287	192	98	3.5
	0.18	63G	B5	11	287	192	98	4.0
	0.25	71K	B5	11	287	210	126	6.1
	0.37	71J	B5	11	287	210	126	6.7
612DA	0.12	63K	B5	11	313	192	98	3.5
	0.18	63G	B5	11	313	192	98	4.0
	0.25	71K	B5	11	313	210	126	6.1
	0.37	71J	B5	11	313	210	126	6.7
612DB	0.25	71K	B5	11	327	210	126	6.1
	0.37	71J	B5	11	327	210	126	6.7
	0.55	80K	B5	12	353	255	142	8.9
	0.75	80G	B5	12	353	255	142	9.6
	1.1	90S	B5	12	353	265	160	13.8
	1.5	90L	B5	12	353	290	160	16.5
613DB	0.12	63K	B5	11	393	192	98	3.5
	0.18	63G	B5	11	393	192	98	4.0
	0.25	71K	B5	11	393	210	126	6.1
	0.37	71J	B5	11	393	210	126	6.7
	0.55	80K	B5	12	419	255	142	8.9
	0.75	80G	B5	12	419	255	142	9.6
	1.1	90S	B5	12	419	265	160	13.8
	1.5	90L	B5	12	419	290	160	16.5
614DC	0.25	71K	B5	11	407	210	126	6.1
	0.37	71J	B5	11	407	210	126	6.7
	0.55	80K	B5	12	433	255	142	8.9
	0.75	80G	B5	12	433	255	142	9.6
	1.1	90S	B5	12	433	265	160	13.8

Unit Size	kW	Frame	IEC	c1	k	L	mc	Motor kg
614DC	1.50	90L	B5	12	433	290	160	16.5
	2.20	100L	B5	14	433	325	165	21.5
	3.0	100Lx	B5	14	433	325	165	25.3
616DB	0.55	80K	B5	12	473	255	142	8.9
	0.75	80G	B5	12	473	255	142	9.6
	1.10	90S	B5	12	473	265	160	13.8
	1.50	90L	B5	12	473	290	160	16.5
	2.20	100L	B5	14	483	325	165	21.5
	3.0	100Lx	B5	14	483	325	165	25.3
616DC	2.20	100L	B5	14	478	325	165	21.5
	3.0	100Lx	B5	14	478	325	165	25.3
	4.0	112M	B5	14	478	335	188	32.0
617DC	0.55	80K	B5	13	515	255	142	8.9
	0.75	80G	B5	13	515	255	142	9.6
	1.10	90S	B5	13	515	265	160	13.8
	1.50	90L	B5	13	515	290	160	16.5
	2.20	100L	B5	14	525	325	165	21.5
	3.0	100Lx	B5	14	525	325	165	25.3
	4.0	112M	B5	14	525	335	188	32.0
618DB	0.75	80G	B5	11	577	255	142	9.6
	1.10	90S	B5	11	577	265	160	13.8
	1.50	90L	B5	11	577	290	160	16.5
	2.20	100L	B5	13	587	325	165	21.5
	3.0	100Lx	B5	13	587	325	165	25.3
	4.0	112M	B5	13	587	335	188	32.0
	5.50	132S	B5	17	613	392	208	47.0
	7.50	132M	B5	17	613	430	208	58.0
619DA	1.10	90S	B5	13	635	265	160	13.8
	1.50	90L	B5	13	635	290	160	16.5
	2.20	100L	B5	14	645	325	165	21.5
	3.0	100Lx	B5	14	645	325	165	25.3
	4.0	112M	B5	14	645	335	188	32.0
619DB	4.0	112M	B5	13	663	335	188	32.0
	5.50	132S	B5	17	689	392	208	47.0
	7.50	132M	B5	17	689	430	208	58.0

Cyclo Gearboxes : Alternate Mounting Arrangements

FLANGE MOUNTING (TYPE DAY / DBY / DCY)

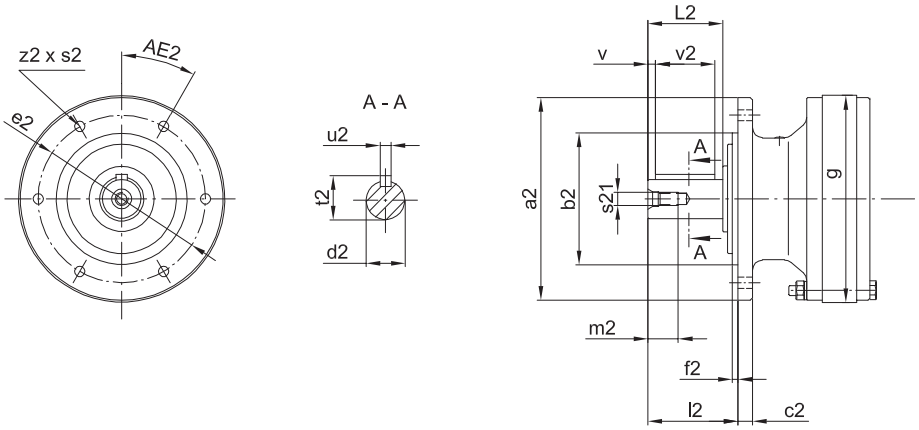

All sizes have 6 holes on the flange with the exception of sizes 607, 608, 609 & 610 which have 4.

Unit Size	Øa2	Øb2	c2	Ød2	Øe2	f2	Øg	l2	L2	m2	s2	s21	t2	u2	v	v2	z2	AE2
606DA	120	80 j6	8	14k6	100	3	110	39	30	12	9	M5	16.0	5	2.5	25	6	30°
607DA	160	110 j6	9	20k6	130	3	110	52	40	15	11	M6	22.5	6	4.0	32	6	45°
609DA	160	110 j6	9	25k6	130	3	150	63	50	22	11	M10	28.0	8	3.5	40	8	45°
610DA	160	110 j6	9	30k6	130	3	150	73	60	22	11	M10	33.0	8	3.5	50	8	45°
612D_	200	130 j6	13	35k6	165	4	204	84	70	28	11	M12	38.0	10	7.0	56	6	30°
613D_	260	200 f8	15	50k6	230	4	230	106	100	36	11	M16	53.5	14	10	80	6	0°
614D_	260	200 f8	15	50k6	230	4	230	106	100	36	11	M16	53.5	14	10	80	6	0°
616D_	340	270 f8	20	60h6	310	4	300	89	90	18	11	M10	64.0	18	0	80	6	0°
617D_	400	316 f8	22	70h6	360	5	340	94	243	24	14	M12	74.5	20	0	80	8	22.5°
618D_	430	345 f8	22	80h6	390	5	370	110	258	24	18	M12	85.0	22	0	100	8	22.5°
619D_	490	400 f8	30	95h6	450	6	430	145	284	34	18	M20	100	25	0	125	12	15°

FACE MOUNTING (TYPE DAZ / DBZ / DCZ)

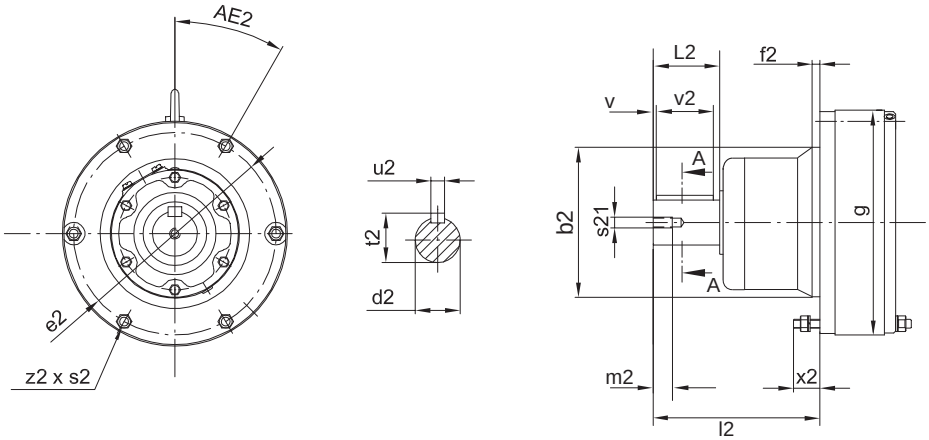

Unit Size	Øb2	Ød2	Øe2	f2	Øg	l2	L2	m2	s2	s21	t2	u2	v	v2	x2	z2	AE2
606 DA	80 g6	14 k6	98	4	110	73	30	12	M6	M5	16.0	5	2.5	25	22	6	0°
607 DA	80 g6	20 k6	98	4	110	84	40	15	M6	M6	22.5	6	4.0	32	22	6	0°
609 DA	105 g6	25 k6	134	6	150	129	50	22	M8	M10	28.0	8	3.5	40	25	8	22.5°
610 DA	105 g6	30 k6	134	6	150	139	60	22	M8	M10	33.0	8	3.5	50	26	8	22.5°
612 D_	140 g6	35 k6	180	14	204	154	70	28	M10	M12	38.0	10	7.0	56	30	6	0°
613 D_	165 g6	50 k6	205	16	230	208	100	36	M10	M16	53.5	14	10.0	80	31	6	0°
614 D_	165 g6	50 k6	205	16	230	208	100	36	M10	M16	53.5	14	10.0	80	31	6	0°
616 D_	200 g6	60 h6	270	10	300	222	90	18	M12	M10	64.0	18	0	80	36	6	30°
617 D_	250 g6	70 h6	300	12	340	262	90	24	M12	M12	74.5	20	0	80	41	8	22.5°
618 D_	280 g6	80 h6	330	12	370	299	110	24	M12	M12	85.0	22	0	100	42	8	22.5°
619 D_	320 g6	95 h6	380	10	430	365	135	34	M12	M20	100	25	0	125	41	12	15°

TECHNICAL NOTES

Tolerances according to DIN ISO 286 part 2.
Keys and keyways according to DIN 6885.

MOUNTING POSTIONS

Foot mounted units from size 606DA - 612DB are grease lubricated for life and suitable for any mounting position.

Other sizes are either grease or oil lubricated based upon mounting position - typically, Horizontally mounted units up to 616DB are grease lubricated and larger units are oil lubricated.

Vertical mounted units are grease lubricated with the exclusion of 616DC - 619DB that use special oil lubrication systems.

FOOT MOUNTED

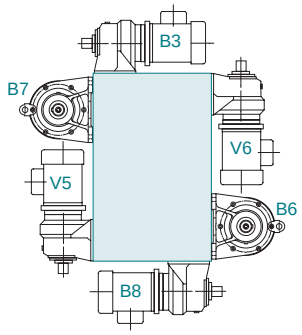

Horizontal Mounting
Approximate oil quantity (litres)

	B3	B6	B7	B8
616DC	0.7	0.7	0.7	Please consult your local Authorised Distributor
617DC	0.7	0.7	0.7	
618DB	1.4	1.4	1.4	
619DA	5.8	5.8	5.8	
619DB	6.0	6.0	6.0	

Vertical Mounting

	V5	V6	Ratios Applicable
616DC	Please consult your local Authorised Distributor	Please consult your local Authorised Distributor	<473 : 1
617DC			<841 : 1
618DC			<1015 : 1
619DA			<2065 : 1
619DB			<2065 : 1

FLANGE MOUNTED

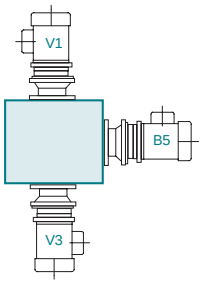

	B5	V1	V3
616DC	Please consult your local Authorised Distributor		
617DC			
618DC			
619DA			
619DB			

Specially modified ring gear housing is required

Cyclo Gearboxes : Dimensions (IEC) Foot Mounted

FOOT MOUNTING (TYPE TAX / TBX / TCX / TDX)

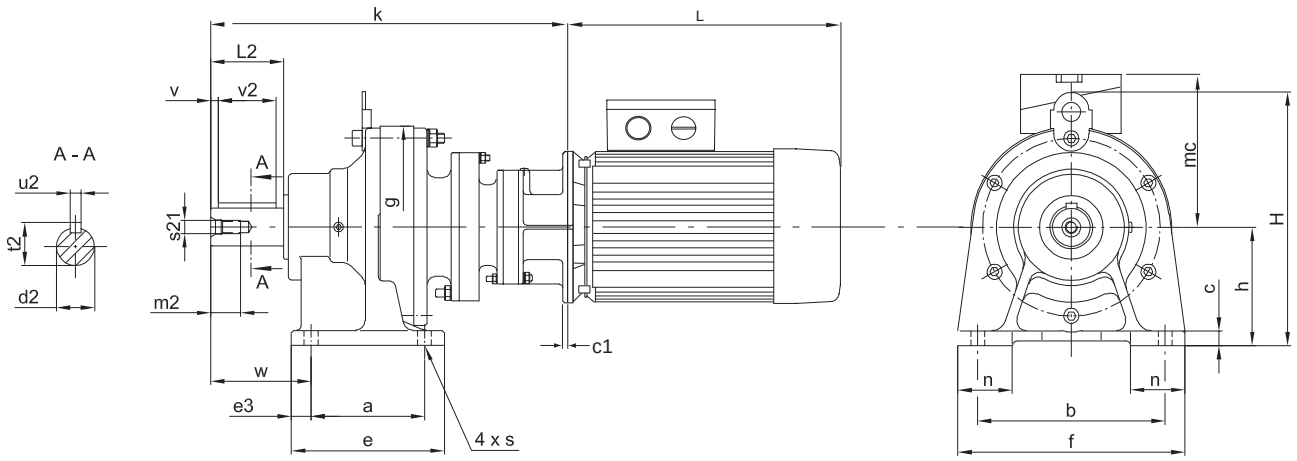

Unit Size	a	b	c	Ød2	e	e3	f	Øg	h	H	L2	m2	n	s	s21	t2	u2	v	v2	w	Weight ~kg
606TA	60	120	10	14 k6	84	12	144	110	80	-	30	12	48	9	M5	16	5	2.5	25	46	8.0
607TA	60	120	10	20 k6	84	12	144	110	80	-	40	15	48	9	M6	23	6	4	32	57	9.0
609TA	90	150	12	25 k6	135	15	180	150	100	-	50	22	65	11	M10	28	8	3.5	40	75	16.0
610TA	90	150	12	30 k6	135	15	180	150	100	-	60	22	40	11	M10	33	8	3.5	50	85	18.0
612TA	115	190	15	35 k6	155	20	230	204	120	257	70	28	55	14	M12	38	10	7	56	97	30.0
612TB	115	190	15	35 k6	155	20	230	204	120	257	70	28	55	14	M12	38	10	7	56	97	36.0
613TA	145	290	22	50 k6	195	25	330	230	150	300	100	36	65	18	M16	54	14	10	80	130	50.0
613TB	145	290	22	50 k6	195	25	330	230	150	300	100	36	65	18	M16	54	14	10	80	130	52.0
614TA	145	290	22	50 k6	195	25	330	230	150	300	100	36	65	18	M16	54	14	10	80	130	50.0
614TB	145	290	22	50 k6	195	25	330	230	150	300	100	36	65	18	M16	54	14	10	80	130	52.0
616TA	150	370	25	60 h6	238	44	410	300	160	367	90	18	75	18	M10	64	18	0	80	139	84.0
616TD	150	370	25	60 h6	238	44	410	300	160	367	90	18	75	18	M10	64	18	0	80	139	103
617TA	275	380	30	70 h6	335	30	430	340	200	429	90	24	80	22	M12	74.5	20	0	80	125	125
617TD	275	380	30	70 h6	335	30	430	340	200	429	90	24	80	22	M12	74.5	20	0	80	125	137
618TA	320	420	30	80 h6	380	30	470	370	220	467	110	24	85	22	M12	85	22	0	100	145	178
618TC	320	420	30	80 h6	380	30	470	370	220	467	110	24	85	22	M12	85	22	0	100	145	192
619TA	380	480	35	95 h6	440	30	530	430	250	538	135	34	90	26	M20	100	25	0	125	170	255
619TB	380	480	35	95 h6	440	30	530	430	250	538	135	34	90	26	M20	100	25	0	125	170	262

All dimensions are in mm ~ Gearbox kg refers to the approximate weight without motor - see table below for additional motor weight

MOTOR OPTIONS AVAILABLE (using 4 pole motors)

Unit Size	kW	Frame	IEC	c1	k	L	mc	Motor kg
606TA	0.12	63K	B5	11	222	192	98	3.5
607TA	0.12	63K	B5	11	233	192	98	3.5
609TA	0.12	63K	B5	11	297	192	98	3.5
610TA	0.12	63K	B5	11	321	192	98	3.5
612TA	0.12	63K	B5	11	347	192	98	3.5
	0.18	63G	B5	11	347	192	98	4
612TB	0.12	63K	B5	11	373	192	98	3.5
613TA	0.18	63G	B5	11	375	192	98	4
613TB	0.18	63G	B5	11	439	192	98	4
614TA	0.18	63G	B5	11	375	192	98	4
614TB	0.18	63G	B5	11	439	192	98	4
616TA	0.18	63G	B5	11	469	192	98	4
	0.25	71K	B5	11	469	210	126	6.1
616TD	0.18	63G	B5	11	542	192	98	4

Unit Size	kW	Frame	IEC	c1	k	L	mc	Motor kg
617TA	0.18	63G	B5	11	516	192	98	4
	0.37	71J	B5	11	516	210	126	6.7
617TD	0.18	63G	B5	11	589	192	98	4
618TA	0.18	63G	B5	11	539	192	98	4
	0.37	71J	B5	11	539	210	126	6.7
618TC	0.18	63G	B5	11	661	192	98	4
619TA	0.18	63G	B5	11	681	192	98	4
	0.37	71J	B5	11	681	210	126	6.7
619TB	0.18	63G	B5	11	737	192	98	4
	0.75	80G	B5	11	737	255	142	9.6

Cyclo Gearboxes : Alternate Mounting Arrangements

FLANGE MOUNTING (TYPE TAY / TBY / TCY / TDY)

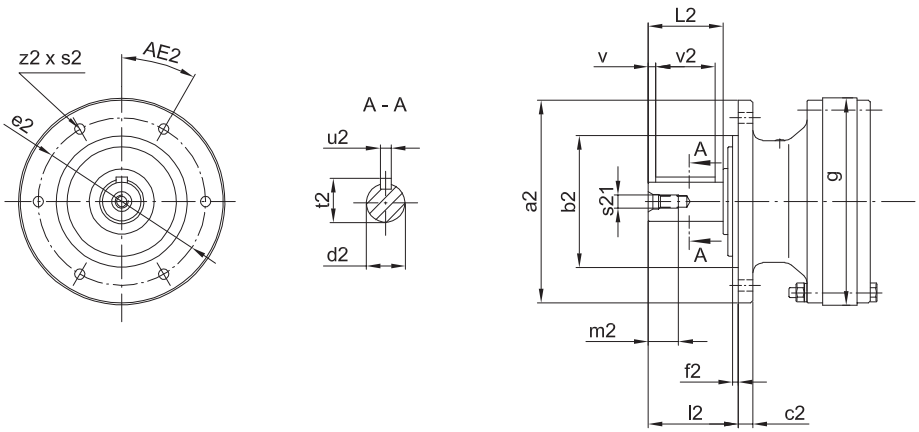

Unit Size	Øa2	Øb2	c2	Ød2	Øe2	f2	Øg	l2	L2	m2	s2	s21	t2	u2	v	v2	z2	AE2
606TA	120	80 j6	8	Ø14k6	100	3	110	39	30	12	9	M5	16.0	5	2.5	25	6	30°
607TA	160	110 j6	9	Ø20k6	130	3	110	52	40	15	11	M6	22.5	6	4.0	32	6	45°
609TA	160	110 j6	9	Ø25k6	130	3	150	63	50	22	11	M10	28.0	8	3.5	40	8	45°
610TA	160	110 j6	9	Ø30k6	130	3	150	73	60	22	11	M10	33.0	8	3.5	50	8	45°
612T_	200	130 j6	13	Ø35k6	165	4	204	84	70	28	11	M12	38.0	10	7.0	56	8	30°
613T_	260	200 f8	15	Ø50k6	230	4	230	106	100	36	11	M16	53.5	14	10	80	6	0°
614T_	260	200 f8	15	Ø50k6	230	4	230	106	100	36	11	M16	53.5	14	10	80	6	0°
616T_	340	270 f8	20	Ø60h6	310	4	300	89	90	18	11	M10	64.0	18	0	80	6	0°
617T_	400	316 f8	22	Ø70h6	360	5	340	94	243	24	14	M12	74.5	20	0	80	8	22.5°
618T_	430	345 f8	22	Ø80h6	390	5	370	110	258	24	18	M12	85.0	22	0	100	8	22.5°
619T_	490	400 f8	30	Ø95h6	450	6	430	145	284	34	18	M20	100	25	0	125	12	15°

FACE MOUNTING (TYPE TAZ / TBZ / TCZ / TDZ)

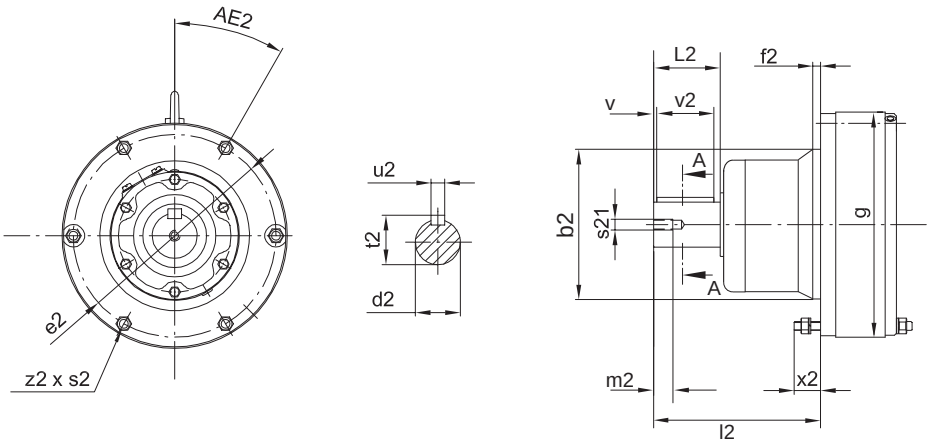

Unit Size	Øb2	Ød2	Øe2	f2	Øg	l2	L2	m2	s2	s21	t2	u2	v	v2	x2	z2	AE2
606 TA	80 g6	14 k6	98	4	110	73	30	12	M6	M5	16.0	5	2.5	25	22	6	0°
607 TA	80 g6	20 k6	98	4	110	84	40	15	M6	M6	22.5	6	4.0	32	22	6	0°
609 TA	105 g6	25 k6	134	6	150	129	50	22	M8	M10	28.0	8	3.5	40	25	8	22.5°
610 TA	105 g6	30 k6	134	6	150	139	60	22	M8	M10	33.0	8	3.5	50	26	8	22.5°
612 T_	140 g6	35 k6	180	14	204	154	70	28	M10	M12	38.0	10	7.0	56	30	6	0°
613 T_	165 g6	50 k6	205	16	230	208	100	36	M10	M16	53.5	14	10.0	80	31	6	0°
614 T_	165 g6	50 k6	205	16	230	208	100	36	M10	M16	53.5	14	10.0	80	31	6	0°
616 T_	200 g6	60 h6	270	10	300	222	90	18	M12	M10	64.0	18	0	80	36	6	30°
617 T_	250 g6	70 h6	300	12	340	262	90	24	M12	M12	74.5	20	0	80	41	8	22.5°
618 T_	280 g6	80 h6	330	12	370	299	110	24	M12	M12	85.0	22	0	100	42	8	22.5°
619 T_	320 g6	95 h6	380	10	430	365	135	34	M12	M20	100	25	0	125	41	12	15°

TECHNICAL NOTES

Tolerances according to DIN ISO 286 part 2.
Keys and keyways according to DIN 6885.

MOUNTING POSTIONS

All Three-stage CYCLO units are grease lubricated.

Size 606TA - 612TB are suitable for all mounting positions and are maintenance free.

Sizes 613TA and above are also grease lubricated for all mounting positions but on units mounted vertically, the gearheads have double sealing on the output and shielded bearings.

FOOT MOUNTED

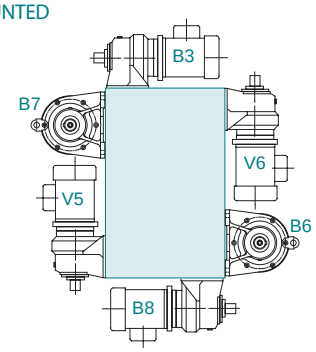

FLANGE MOUNTED

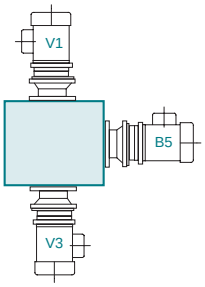

Cyclo Gearboxes : Dimensions (Integrated Motor) Foot Mounted

FOOT MOUNTING (TYPE A)

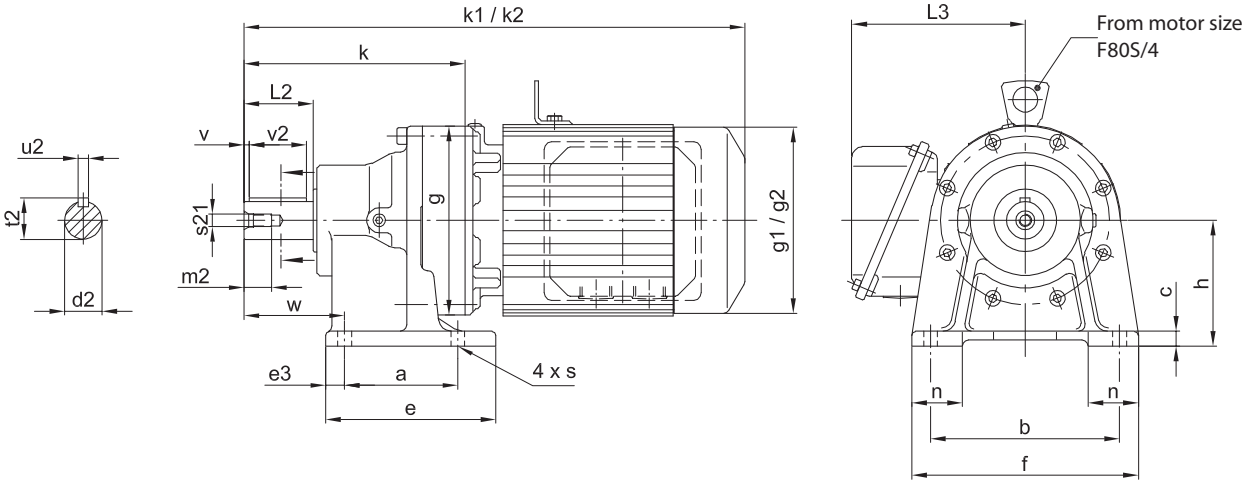

Unit Size	a	b	c	Ød2	e	e3	f	Ø g	h	k	L2	m2	n	Øs	s21	t2	u2	v	v2	w
606	60	120	10	14k6	84	12	144	110	80	97	30	12	48	9	M5	16	5	2.5	25	46
607	60	120	10	20k6	84	12	144	110	80	108	40	51	48	9	M6	23	6	4	32	57
608	75	120	13	25k6	99	12	144	134	90	144	50	22	49	9	M10	28	8	3.5	40	67
609	90	150	12	25k6	135	15	180	150	100	157	50	22	65	11	M10	28	8	3.5	40	75
610	90	150	12	30k6	135	15	180	150	100	181	60	22	40	11	M10	33	8	3.5	50	85
611	90	150	12	35k6	135	15	180	162	120	195	70	28	45	11	M12	38	10	7	56	95
612	115	190	15	35k6	155	20	230	204	120	201	70	28	55	14	M12	38	10	7	56	97
613	145	290	22	50k6	195	25	330	230	150	270	100	36	65	18	M16	54	14	10	80	130
614	145	290	22	50k6	195	25	330	230	150	270	100	36	65	18	M16	54	14	10	80	130
616	150	370	25	60h6	238	44	410	300	160	308	90	18	75	18	M10	64	18	0	80	139

All dimensions are in mm. Units from size 612 have a lifting eye fitted to the gearhead rather than the motor - please consult your local authorised distributor.

MOTOR OPTIONS AVAILABLE (using 4 pole motors)

Unit Size	kW	Frame	Standard			Braked			L3
			Øg1	k1	kg	Øg2	k2	kg	
606	0.12	F63S/4	119	259	6	124	266	7	128
	0.18	F63M/4	124	277	7	124	305	8	128
	0.25	F63M/4	124	277	7	124	305	8	128
607	0.12	F63S/4	119	270	6	124	277	7	128
	0.18	F63M/4	124	288	7	124	316	8	128
	0.25	F63M/4	124	288	7	124	316	8	128
	0.37	F71M/4	124	308	8	124	336	9	128
608	0.12	F63S/4	119	301	9	124	308	10	128
	0.18	F63M/4	124	319	10	124	347	11	128
	0.25	F63M/4	124	319	10	124	347	11	128
	0.37	F71M/4	124	339	12	124	367	13	128
	0.55	F80S/4	148	376	16	148	419	17	138
	0.75	F80M/4	148	376	16	148	419	17	138
609	0.12	F63S/4	119	318	11	124	326	13	128
	0.18	F63M/4	124	336	12	124	365	14	128
	0.25	F63M/4	124	336	12	124	365	14	128
	0.37	F71M/4	124	356	13	124	385	15	128
	0.55	F80S/4	148	394	17	148	437	20	138
	0.75	F80M/4	148	394	17	148	437	20	138
	1.1	F90S/4	160	427	20	160	489	25	143
	1.5	F90L/4	160	427	20	160	489	25	143
610	0.18	F63M/4	124	360	18	124	389	19	128
	0.25	F63M/4	124	360	18	124	389	19	128
	0.37	F71M/4	124	380	19	124	409	20	128
	0.55	F80S/4	148	418	22	148	461	25	138
	0.75	F80M/4	148	418	22	148	461	25	138
	1.1	F90S/4	160	451	26	160	513	31	143
	1.5	F90L/4	160	451	26	160	513	31	143
	2.2	F100L/4	173	471	30	173	534	36	150
611	0.37	F71M/4	124	391	19	124	419	20	128
	0.55	F80S/4	148	428	22	148	471	25	138
	0.75	F80M/4	148	428	22	148	471	25	138
	1.1	F90S/4	160	461	25	160	523	30	143
	1.5	F90L/4	160	461	25	160	523	30	143
	2.2	F100L/4	173	481	29	173	544	35	150
	3.0	F112S/4	212	516	39	212	588	49	166
	4.0	F112M/4	212	516	39	212	588	49	166

Unit Size	kW	Frame	Standard			Braked			L3
			Øg1	k1	kg	Øg2	k2	kg	
612	0.37	F71M/4	124	406	29	124	434	31	128
	0.55	F80S/4	148	438	31	148	481	33	138
	0.75	F80M/4	148	438	31	148	481	33	138
	1.1	F90S/4	160	471	35	160	533	40	143
	1.5	F90L/4	160	471	35	160	533	40	143
	2.2	F100L/4	173	491	39	173	554	46	150
	3.0	F112S/4	212	514	49	212	586	59	166
	4.0	F112M/4	212	514	49	212	586	59	166
	5.5	F132S/4	212	558	56	212	630	66	166
613	0.75	F80M/4	148	507	50	148	550	53	138
	1.1	F90S/4	160	540	54	160	602	59	143
	1.5	F90L/4	160	540	54	160	602	59	143
	2.2	F100L/4	173	560	57	173	623	64	150
	3.0	F112S/4	212	583	67	212	655	77	166
	4.0	F112M/4	212	583	67	212	655	77	166
	5.5	F132S/4	212	627	74	212	699	84	166
	7.5	F132M/4	251	650	89	251	745	107	211
	11.0	F160M/4	251	710	103	251	805	120	211
614	0.75	F80M/4	148	507	51	148	550	54	138
	1.1	F90S/4	160	540	55	160	602	60	143
	1.5	F90L/4	160	540	55	160	602	60	143
	2.2	F100L/4	173	560	58	173	623	65	150
	3.0	F112S/4	212	583	68	212	655	78	166
	4.0	F112M/4	212	583	68	212	655	78	166
	5.5	F132S/4	212	627	75	212	699	85	166
	7.5	F132M/4	251	650	90	251	745	108	211
	11.0	F160M/4	251	710	103	251	805	121	211
	15.0	G160L/4	323	800	155	323	890	188	261
616	1.5	F90L/4	160	583	93	160	645	98	143
	2.2	F100L/4	173	598	96	173	661	102	150
	3.0	F112S/4	212	621	105	212	693	115	166
	4.0	F112M/4	212	621	105	212	693	115	166
	5.5	F132S/4	212	665	112	212	737	122	166
	7.5	F132M/4	251	693	128	251	788	145	211
	11.0	F160M/4	251	753	142	251	848	159	211
	15.0	G160L/4	232	838	195	323	928	228	261

Cyclo Gearboxes : Alternate Mounting Arrangements

FLANGE MOUNTING (TYPE B)

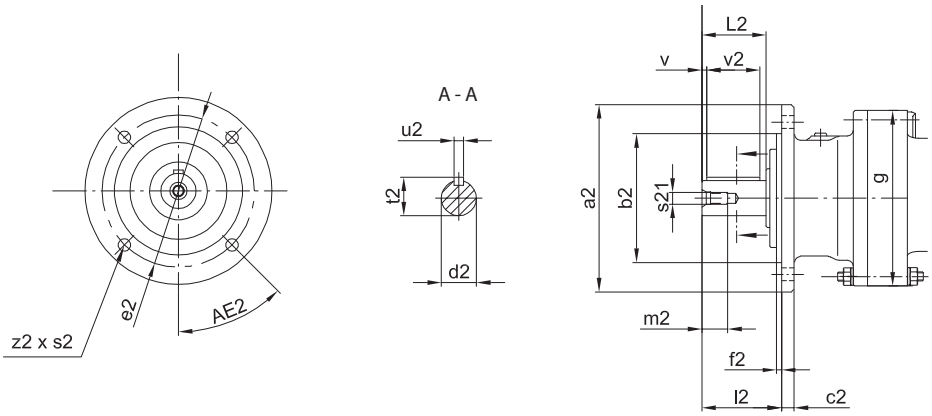

Unit Size	Øa2	Øb2	c2	Ød2	Øe2	f2	Øg	l2	L2	m2	s2	s21	t2	u2	v	v2	z2	AE2
606	120	80 j6	8	Ø14k6	100	3	Ø110	39	30	12	9	M5	16.0	5	2.5	25	6	30°
607	160	110 j6	9	Ø20k6	130	3	Ø110	52	40	15	11	M6	22.5	6	4.0	32	6	45°
608	160	110 j6	9	Ø25k6	130	3	Ø134	63	50	22	11	M10	28.0	8	3.5	40	8	45°
609	160	110 j6	9	Ø25k6	130	3	Ø150	63	50	22	11	M10	28.0	8	3.5	40	8	45°
610	160	110 j6	9	Ø30k6	130	3	Ø150	73	60	22	11	M10	33.0	8	3.5	50	8	45°
611	200	130 j6	11	Ø35k6	165	4	Ø162	83	70	28	11	M12	38.0	10	7.0	56	8	30°
612	200	130 j6	13	Ø35k6	165	4	Ø204	84	70	28	11	M12	38.0	10	7.0	56	6	30°
613	260	200 f8	15	Ø50k6	230	4	Ø230	106	100	36	11	M16	53.5	14	10	80	6	0°
614	260	200 f8	15	Ø50k6	230	4	Ø230	106	100	36	11	M16	53.5	14	10	80	6	0°
616	340	270 f8	20	Ø60h6	310	4	Ø300	89	90	18	11	M10	64.0	18	0	80	6	0°

FACE MOUNTING (TYPE C)

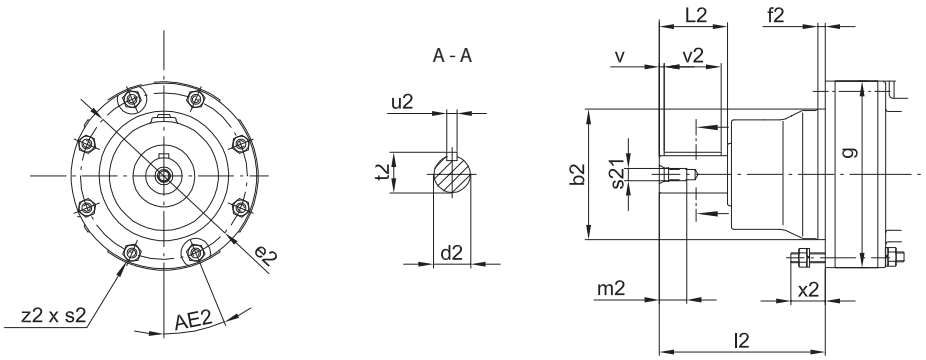

Unit Size	Øb2	Ød2	Øe2	f2	Øg	l2	L2	m2	s2	s21	t2	u2	v	v2	x2	z2	AE2
606	80 g6	Ø14k6	98	4	110	73	30	12	M6	M5	12.0	5	2.5	25	21	6	0°
607	80 g6	Ø20k6	98	4	110	84	40	15	M6	M6	23.0	6	4.0	32	21	6	0°
608	95 g6	Ø25k6	118	5	134	106	50	22	M8	M10	28.0	8	3.5	40	27	8	22.5°
609	105 g6	Ø25k6	134	6	150	129	50	22	M8	M10	28.0	8	3.5	40	29	8	22.5°
610	105 g6	Ø30k6	134	6	150	139	60	22	M8	M10	33.0	8	3.5	50	28	8	22.5°
611	115 g6	Ø35k6	146	6	162	143	70	28	M8	M12	38.0	10	7.0	56	28	8	22.5°
612	140 g6	Ø35k6	180	14	204	154	70	28	M10	M12	38.0	10	7.0	56	30	6	0°
613	165 g6	Ø50k6	205	16	230	208	100	36	M10	M16	54.0	14	10	80	31	6	0°
614	165 g6	Ø50k6	205	16	230	208	100	36	M10	M16	54.0	14	10	80	31	6	0°
616	200 g6	Ø60h6	270	10	300	222	90	18	M12	M10	64.0	18	-	80	35	6	30°

TECHNICAL NOTES

Tolerances according to DIN ISO 286 part 2.
Keys and keyways according to DIN 6885.

MOUNTING POSTIONS

Footmountedunitsfromsize606-612aregreaselubricated forlifeandsuitableforanymountingposition.Unitsfrom size613-616areoillubricatedforHorizontalandvertical mounting.

Size616requiresanadditionaloilpumpandcirculatingpipe whenusedintheverticalposition-pleaseconsultyourlocal authorised distributor.

Size613-616Flangemountedunitsusespecial RingGear Housings.

FOOT MOUNTED

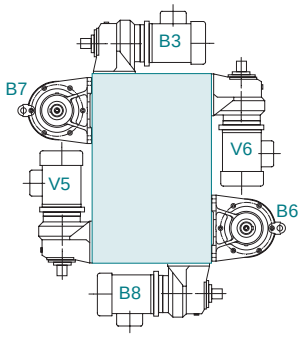

Horizontal Mounting
Approximate oil quantity (litres)

	B3	B6	B7	B8
613	0.7	0.7	0.7	0.7
614	0.7	0.7	0.7	0.7
616	1.4	1.4	1.4	1.4

Vertical Mounting

	V5	V6
613	Please consult	
614	your local	
616	Authorised Distributor	

FLANGE MOUNTED

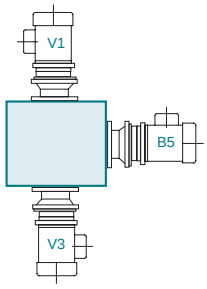

	B5	V1	V3
613	Please consult your local Authorised Distributor as a special ring gear housing is required for flange and face mounted units.		
614			
616			

Cyclo Gearboxes : Dimensions (Integrated Motor) Foot Mounted

FOOT MOUNTING (TYPE DAA / DVA / DCA)

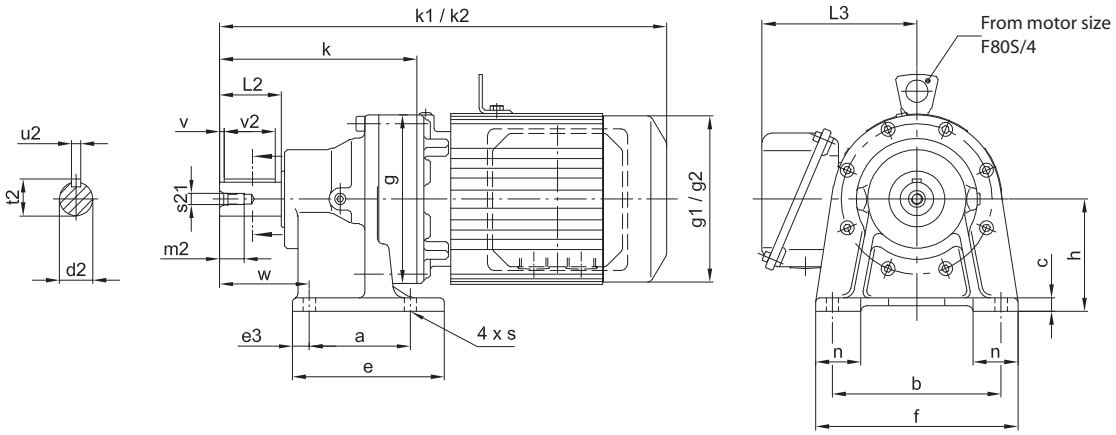

Unit Size	a	b	c	Ød2	e	e3	f	Ø g	h	H	k	L2	m2	n	Øs	s21	t2	u2	v	v2	w
606DA	60	120	10	14k6	84	12	144	110	80	-	131	30	12	48	9	M5	16.0	5	2.5	25	46
607DA	60	120	10	20k6	84	12	144	110	80	-	142	40	15	48	9	M6	23.0	6	4	32	57
609DA	90	150	12	25k6	135	15	180	150	100	-	206	50	22	65	11	M10	28.0	8	3.5	40	75
610DA	90	150	12	30k6	135	15	180	150	100	-	230	60	22	40	11	M10	33.0	8	3.5	50	85
612DA	115	190	15	35k6	155	20	230	204	120	257	256	70	28	55	14	M12	38.0	10	7	56	97
612DB	115	190	15	35k6	155	20	230	204	120	257	267	70	28	55	14	M12	38.0	10	7	56	97
613DB	145	290	22	50k6	195	25	330	230	150	300	334	100	36	65	18	M16	53.5	14	10	80	130
613DC	145	290	22	50k6	195	25	330	230	150	300	348	100	36	65	18	M16	53.5	14	10	80	130
614DC	145	290	22	50k6	195	25	330	230	150	300	348	100	36	65	18	M16	53.5	14	10	80	130
616DB	150	370	25	60h6	238	44	410	300	160	353	388	90	18	75	18	M10	64.0	18	0	80	139
616DC	150	370	25	60h6	238	44	410	300	160	353	390	90	18	75	18	M10	64.0	18	0	80	139
617DC	275	380	30	70h6	335	30	430	340	200	418	437	90	24	80	22	M12	74.5	20	0	80	125
618DB	320	420	30	80h6	380	30	470	370	220	451	496	496	24	85	22	M12	85.0	22	0	100	145

All dimensions are in mm.

MOTOR OPTIONS AVAILABLE (using 4 pole motors)

Unit Size	kW	Frame	Standard			Braked			L3
			Øg1	k1	kg	Øg2	k2	kg	
606DA	0.12	F63S/4	119	292	8	124	300	9	128
607DA	0.12	F63S/4	119	303	8	124	311	9	128
	0.18	F63M/4	124	321	9	124	350	10	128
609DA	0.12	F63S/4	119	367	16	124	375	17	128
	0.18	F63M/4	124	385	17	124	414	18	128
	0.25	F63M/4	124	385	17	124	414	18	128
	0.37	F71M/4	124	405	18	124	434	19	128
610DA	0.12	F63S/4	119	391	18	124	399	19	128
	0.18	F63M/4	409	124	19	124	438	20	128
	0.25	F63M/4	409	124	19	124	438	20	128
	0.37	F71M/4	429	124	20	124	458	21	128
612DA	0.12	F63S/4	119	417	29	124	425	30	128
	0.18	F63M/4	124	435	30	124	464	31	128
	0.25	F63M/4	124	435	30	124	464	31	128
	0.37	F71M/4	124	455	31	124	484	32	128
612DB	0.12	F63S/4	119	424	32	124	436	34	128
	0.18	F63M/4	124	447	33	124	475	35	128
	0.25	F63M/4	124	447	33	124	475	35	128
	0.37	F71M/4	124	467	34	124	495	36	128
	0.55	F80S/4	148	504	38	148	547	41	138
	0.75	F80M/4	148	504	38	148	547	41	138
	1.1	F90S/4	160	537	41	160	599	46	143
	1.5	F90L/4	160	537	41	160	599	46	143
613DB	0.12	F63S/4	119	495	47	124	503	49	128
	0.18	F63M/4	124	513	48	124	542	50	128
	0.25	F63M/4	124	513	48	124	542	50	128
	0.37	F71M/4	124	533	49	124	562	51	128
	0.55	F80S/4	148	571	53	148	614	56	138
	0.75	F80M/4	148	571	53	148	614	56	138
	1.1	F90S/4	160	604	56	160	666	61	143
	1.5	F90L/4	160	604	56	160	666	61	143
613DC	0.55	F80S/4	148	585	55	148	628	58	138
	0.75	F80M/4	148	585	55	148	628	58	138
	1.1	F90S/4	160	618	59	160	680	64	143
	1.5	F90L/4	160	618	59	160	680	64	143
	2.2	F100L/4	173	638	63	173	701	69	150

Unit Size	kW	Frame	Standard			Braked			L3
			Øg1	k1	kg	Øg2	k2	kg	
614DC	0.18	F63M/4	124	527	50	124	556	52	128
	0.25	F63M/4	124	527	50	124	556	52	128
	0.37	F71M/4	124	547	51	124	576	53	128
	0.55	F80S/4	148	585	55	148	628	58	138
	0.75	F80M/4	148	585	55	148	628	58	138
	1.1	F90S/4	160	618	59	160	680	64	143
	1.5	F90L/4	160	618	59	160	680	64	143
	2.2	F100L/4	173	638	63	173	701	69	150
616DB	0.18	F63M/4	124	568	92	124	596	93	128
	0.25	F63M/4	124	568	92	124	596	93	128
	0.37	F71M/4	124	588	93	124	616	94	128
	0.55	F80S/4	148	625	96	148	668	99	138
	0.75	F80M/4	148	625	96	148	668	99	138
	1.1	F90S/4	160	658	100	160	720	105	143
	1.5	F90L/4	160	658	100	160	720	105	143
	2.2	F100L/4	173	678	104	173	741	110	150
616DC	2.2	F100L/4	173	680	110	173	743	117	150
	3	F112S/4	212	703	120	212	775	130	166
	4	F112M/4	212	703	120	212	775	130	166
	5.5	F132S/4	212	747	127	212	819	137	166
617DC	0.37	F71M/4	124	641	133	124	670	135	128
	0.55	F80S/4	148	674	137	148	717	140	138
	0.75	F80M/4	148	674	137	148	717	140	138
	1.1	F90S/4	160	707	140	160	769	145	143
	1.5	F90L/4	160	707	140	160	769	145	143
	2.2	F100L/4	173	727	144	173	790	151	150
	3	F112S/4	212	750	154	212	822	164	166
	4	F112M/4	212	750	154	212	822	164	166
	5.5	F132S/4	212	794	161	212	866	171	166
618DB	0.75	F80M/4	148	733	189	148	776	192	138
	1.1	F90S/4	160	766	192	160	828	197	143
	1.5	F90L/4	160	766	192	160	828	197	143
	2.2	F100L/4	173	786	196	173	849	203	166
	3	F112S/4	212	809	206	212	881	216	166
	4	F112M/4	212	809	206	212	881	216	166
	5.5	F132S/4	212	853	213	212	925	223	166
	7.5	F132M/4	251	876	228	251	971	246	211
	11	F160M/4	251	936	242	251	1031	260	211

Cyclo Gearboxes : Dimensions (Integrated Motor) Foot Mounted

FOOT MOUNTING (TYPE DAA / DBA / DCA)

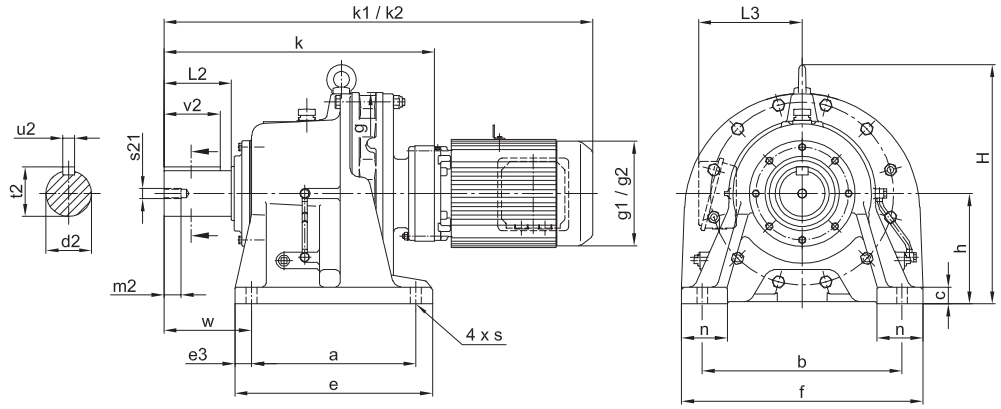

Unit Size	a	b	c	Ød2	e	e3	f	Ø g	h	H	k	L2	m2	n	Øs	s21	t2	u2	v2	w
619DA	380	480	35	95h6	440	30	530	430	250	531	557	135	34	90	26	M20	100	25	125	170
619DB	380	480	35	95h6	440	30	530	430	250	531	572	135	34	90	26	M20	100	25	125	170
620DB	360	440	35	100h6	440	40	530	448	250	530	624	165	34	100	26	M20	106	28	165	215
621DA	395	480	40	110h6	475	40	580	485	265	575	651	165	34	110	26	M20	116	28	165	210
622DA	420	540	40	120h6	520	50	620	526	280	610	692	165	34	115	33	M20	127	32	165	230
622DB	420	540	40	120h6	520	50	620	526	280	610	735	165	34	115	33	M20	127	32	165	230
623DA	460	580	45	130h6	560	50	670	562	300	667	778	200	41	120	33	M24	137	32	200	260
624DA	480	630	45	140h6	580	50	720	614	335	729	816	200	41	128	39	M24	148	36	200	263
625DA	520	670	50	160h6	630	55	780	670	375	815	956	240	49	140	39	M30	169	40	240	320
626DA	590	770	55	170h6	700	55	880	736	400	874	1088	300	49	160	45	M30	179	40	300	39

All dimensions are in mm.

MOTOR OPTIONS AVAILABLE (using 4 pole motors)

Unit Size	kW	Frame	Standard			Braked			L3
			Øg1	k1	kg	Øg2	k2	kg	
619DA	0.55	F80S/4	148	794	249	148	837	252	138
	0.75	F80M/4	148	794	249	148	837	252	138
	1.1	F90S/4	160	827	253	160	889	258	143
	1.5	F90L/4	160	827	253	160	889	258	143
	2.2	F100L/4	173	847	257	173	910	264	150
	3	F112S/4	212	870	267	212	942	277	166
	4	F112M/4	212	870	267	212	942	277	166
	5.5	F132S/4	212	914	274	212	986	284	166
619DB	2.2	F100L/4	173	862	264	173	925	271	150
	3	F112S/4	212	885	274	212	957	284	166
	4	F112M/4	212	885	274	212	957	284	166
	5.5	F132S/4	212	929	281	251	1001	291	211
	7.5	F132M/4	251	952	296	251	1047	314	211
	11	F160M/4	251	1012	310	323	1107	328	261
	15	G160L/4	323	1102	362	323	1192	395	261
620DB	0.75	F80M/4	148	861	281	148	904	284	138
	1.1	F90S/4	160	894	285	160	956	290	143
	1.5	F90L/4	160	894	285	160	956	290	143
	2.2	F100L/4	173	914	288	173	977	295	150
	3	F112S/4	212	937	298	212	1009	308	166
	4	F112M/4	212	937	298	212	1009	308	166
	5.5	F132S/4	212	981	305	212	1053	315	166
	7.5	F132M/4	251	1004	320	251	1099	338	211
	11	F160M/4	251	1064	333	251	1159	351	211
	15	G160L/4	323	1154	385	323	1234	417	261
621DA	0.75	F80M/4	148	887	362	148	930	365	138
	1.1	F90S/4	160	920	366	160	982	371	143
	1.5	F90L/4	160	920	366	160	982	371	143
	2.2	F100L/4	173	940	369	173	1003	376	150
	3	F112S/4	212	964	379	212	1035	389	166
	4	F112M/4	212	964	379	212	1035	389	166
	5.5	F132S/4	212	1007	386	212	1079	396	166
	7.5	F132M/4	251	1030	401	251	1125	419	211
	11	F160M/4	251	1090	414	251	1185	432	211
	15	G160L/4	323	1180	466	323	1270	499	261
622DA	1.1	F90S/4	160	962	440	160	1024	445	143
	1.5	F90L/4	160	962	440	160	1024	445	143
	2.2	F100L/4	173	982	443	173	1045	450	150
	3	F112S/4	212	1005	453	212	1077	463	166
	4	F112M/4	212	1005	453	212	1077	463	166
	5.5	F132S/4	212	1049	460	212	1121	470	166
	7.5	F132M/4	251	1072	475	251	1167	493	211
	11	F160M/4	251	1132	489	251	1227	507	211
	15	G160L/4	323	1222	541	323	1312	574	261

Unit Size	kW	Frame	Standard			Braked			L3
			Øg1	k1	kg	Øg2	k2	kg	
622DB	5.5	F132S/4	212	1107	505	212	1179	516	166
	7.5	F132M/4	251	1125	520	251	1220	538	211
	11	F160M/4	251	1185	534	251	1280	552	211
	15	G160L/4	323	1265	588	323	1355	621	261
	18.5	F180MG/4	394	1360	656	394	1570	707	342
	22	F180MG/4	394	1360	656	394	1570	707	342
	30	F180L/4	394	1360	673	394	1570	724	342
623DA	2.2	F100L/4	173	1068	560	173	1131	566	150
	3	F112S/4	212	1091	569	212	1163	579	166
	4	F112M/4	212	1091	569	212	1163	579	166
	5.5	F132S/4	212	1135	576	212	1207	586	166
	7.5	F132M/4	251	1163	592	251	1258	609	211
	11	F160M/4	251	1223	606	251	1318	623	211
	15	G160L/4	323	1308	659	323	1398	692	261
	18.5	F180MG/4	394	1403	732	394	1613	783	342
	22	F180MG/4	394	1403	732	394	1613	783	342
624DA	2.2	F100L/4	173	1106	669	173	1169	675	150
	3	F112S/4	212	1129	678	212	1201	688	166
	4	F112M/4	212	1129	678	212	1201	688	166
	5.5	F132S/4	212	1173	685	212	1245	695	166
	7.5	F132M/4	251	1201	701	251	1296	718	211
	11	F160M/4	251	1261	715	251	1356	732	211
	15	G160L/4	323	1346	768	323	1436	801	261
	18.5	F180MG/4	394	1441	835	394	1651	886	342
	22	F180MG/4	394	1441	835	394	1651	886	342
625DA	3	F112S/4	212	1284	1030	212	1356	1040	166
	4	F112M/4	212	1284	1030	212	1356	1040	166
	5.5	F132S/4	212	1328	1040	212	1400	1050	166
	7.5	F132M/4	251	1346	1055	251	1441	1070	211
	11	F160M/4	251	1406	1070	251	1501	1085	211
	15	G160L/4	323	1486	1120	323	1576	1155	261
	18.5	F180MG/4	394	1581	1190	394	1791	1241	342
	22	F180MG/4	394	1581	1190	394	1791	1241	342
	30	F180L/4	394	1581	1210	394	1791	1253	342
626DA	5.5	F132S/4	212	1480	1365	212	1552	1375	166
	7.5	F132M/4	251	1493	1380	251	1588	1400	211
	11	F160M/4	251	1553	1395	251	1648	1410	211
	15	G160L/4	323	1618	1445	323	1708	1480	261
	18.5	F180MG/4	394	1713	1520	394	1923	1565	342
	22	F180MG/4	394	1713	1520	394	1923	1565	342
	30	F180L/4	394	1713	1535	394	1923	1578	342
	37	F200L/4	394	1828	1570	394	2043	1667	342
	45	F225S/6	394	1828	1570	394	2043	1667	342

Cyclo Gearboxes : Reducer selection

SPEED REDUCER SELECTION TABLES - 580RPM INPUT

These rating tables are based on a service factor of 1.0 - suitable for 10hrs/day at Uniform Load.

M_2 = Allowable output torque (Nm)
F_{R2} = Allowable Radial load applied to middle of shaft (N)
P_1 = Allowable Input Power (kW)
n_2 = Output Speed (rpm)

Unit Size	n_2	96.7	72.5	52.7	44.6	38.7	34.1	27.6	23.2	20.0	16.6	13.5	11.4	9.83	8.17	6.67	4.87
	Ratio	6	8	11	13	15	17	21	25	29	35	43	51	59	71	87	119
606	P_1	0.267	0.216	0.174	0.148	0.128	0.113	0.091	0.077	0.066	0.055	0.045	-	-	-	-	-
	M_2	25.0	27.1	30.0	30.0	30.0	30.0	30.0	30.0	30.0	30.0	30.0	-	-	-	-	-
	F_{R2}	796	811	957	1050	1170	1180	1180	1180	1180	1180	1180	-	-	-	-	-
607	P_1	0.316	0.280	0.291	0.273	0.256	0.226	0.183	0.153	0.132	0.110	0.089	0.071	0.062	-	-	-
	M_2	29.7	36.1	50.1	55.5	60.0	60.0	60.0	60.0	60.0	60.0	60.0	56.9	57.4	-	-	-
	F_{R2}	1690	1770	1770	1770	1770	1770	1770	1770	1770	1770	1660	1550	1560	-	-	-
608	P_1	0.778	0.778	0.581	0.492	0.426	0.376	0.235	0.256	0.220	0.183	0.149	0.125	0.108	0.090	0.073	-
	M_2	73.0	97.3	100	100	100	100	77.2	100	100	100	100	100	100	100	100	-
	F_{R2}	2280	2440	2560	2560	2560	2560	2560	2560	2560	2560	2560	2560	2560	2560	2560	-
609	P_1	1.47	1.34	1.05	0.984	0.852	0.752	0.609	0.499	0.441	0.365	0.297	0.192	0.158	0.119	0.131	0.058
	M_2	138	168	181	200	200	200	200	195	200	200	200	153	146	132	178	108
	F_{R2}	3340	3340	3340	3240	3240	3240	3240	3340	3240	3240	3240	3340	3340	3340	3340	3340
610	P_1	1.82	1.86	1.79	1.48	1.28	1.13	0.913	0.767	0.661	0.548	0.446	0.372	0.321	0.238	0.220	0.139
	M_2	171	233	308	300	300	300	300	300	300	300	300	297	296	264	300	258
	F_{R2}	4770	5300	5400	5400	5400	5400	5400	5400	5400	5400	5400	5120	4880	4680	4690	4660
611	P_1	2.06	3.25	2.44	2.07	1.79	1.58	1.28	1.07	0.926	0.767	0.624	0.526	0.455	0.378	0.309	-
	M_2	193	406	420	420	420	420	420	420	420	420	420	420	420	420	420	-
	F_{R2}	5490	5940	6860	6830	6960	6760	6690	6430	6320	6380	6660	6660	6680	6640	6670	-
612	P_1	3.90	4.00	3.47	3.10	2.69	2.37	1.92	1.61	1.39	1.15	0.940	0.790	0.680	0.533	0.463	-
	M_2	366	501	596	630	630	630	630	630	630	630	630	630	630	592	630	-
	F_{R2}	6650	7260	7520	6740	6760	6740	6740	6740	6740	6740	6870	6740	6740	7610	6740	-
613	P_1	6.47	6.11	5.46	4.62	4.01	3.53	2.86	2.30	2.07	1.72	1.40	1.21	1.14	0.938	0.719	-
	M_2	607	764	940	940	940	940	940	900	940	940	940	967	1050	1040	979	-
	F_{R2}	6970	7780	8920	9370	9630	10400	11200	11700	12300	13000	13600	13300	14200	14300	14500	-
614	P_1	7.64	7.80	7.51	6.74	5.79	5.15	4.07	3.50	3.02	2.50	2.04	1.72	1.48	1.19	0.917	-
	M_2	717	976	1290	1370	1360	1370	1340	1370	1370	1370	1370	1370	1370	1320	1250	-
	F_{R2}	11600	12800	14400	14400	14500	14500	14700	14500	14200	14400	14100	14200	16000	16000	16000	-
616	P_1	14.10	14.90	12.20	10.30	8.95	7.90	6.39	5.37	4.63	3.84	3.12	2.63	2.28	1.89	1.51	-
	M_2	1320	1870	2100	2100	2100	2100	2100	2100	2100	2100	2100	2100	2100	2100	2050	-
	F_{R2}	13500	14900	17000	18000	19200	19900	21500	22100	22100	22100	22100	22100	22100	22100	21800	-
617	P_1	19.80	20.80	18.30	15.50	13.40	11.80	9.59	8.06	6.94	5.75	4.68	3.95	3.41	2.84	2.31	-
	M_2	1860	2600	3150	3150	3150	3150	3150	3150	3150	3150	3150	3150	3150	3150	3150	-
	F_{R2}	15100	16500	18900	19900	21000	22000	24100	25100	26600	28400	29500	29500	29500	29500	29500	-
618	P_1	-	-	27.90	24.10	19.90	18.80	15.20	12.80	11.00	9.13	7.43	6.27	5.42	4.06	3.67	-
	M_2	-	-	4810	4900	4670	5000	5000	5000	5000	5000	5000	5000	5000	4510	5000	-
	F_{R2}	-	-	25200	26400	28000	29600	32200	33600	35300	37900	40800	41700	41600	41700	41700	-
619	P_1	-	-	44.00	36.10	33.20	29.90	24.20	20.40	17.50	14.50	11.80	9.98	8.63	7.17	5.85	-
	M_2	-	-	7570	7350	7800	7960	7960	7960	7960	7960	7960	7960	7960	7960	7960	-
	F_{R2}	-	-	35100	36700	38600	41000	44600	46900	49500	52500	56700	58200	58100	58000	58400	-

* For larger unit ratings, please refer to page 368

Cyclo Gearboxes : Reducer selection

SPEED REDUCER SELECTION TABLES - 720RPM INPUT

These rating tables are based on a service factor of 1.0 - suitable for 10hrs/day at Uniform Load.

M_2 = Allowable output torque (Nm)
F_{R2} = Allowable Radial load applied to middle of shaft (N)
P_1 = Allowable Input Power (kW)
n_2 = Output Speed (rpm)

Unit Size	n_2	120	90.0	65.5	55.4	48.0	42.4	34.3	28.8	24.8	20.6	16.7	14.1	12.2	10.1	8.3	6.1
	Ratio	6	8	11	13	15	17	21	25	29	35	43	51	59	71	87	119
606	P_1	0.286	0.259	0.216	0.183	0.159	0.140	0.113	0.095	0.082	0.068	0.055	-	-	-	-	-
	M_2	21.6	26.1	30.0	30.0	30.0	30.0	30.0	30.0	30.0	30.0	30.0	-	-	-	-	-
	F_{R2}	796	811	957	1050	1170	1180	1180	1180	1180	1180	1180	-	-	-	-	-
607	P_1	0.376	0.325	0.344	0.322	0.317	0.280	0.227	0.190	0.164	0.136	0.111	0.089	0.077	-	-	-
	M_2	28.4	32.8	47.7	52.7	60.0	60.0	60.0	60.0	60.0	60.0	60.0	56.9	57.4	-	-	-
	F_{R2}	1570	1730	1770	1770	1770	1770	1770	1770	1770	1770	1660	1550	1560	-	-	-
608	P_1	0.778	0.778	0.683	0.610	0.529	0.467	0.292	0.317	0.274	0.227	0.185	0.156	0.135	0.112	0.091	-
	M_2	58.8	78.4	94.7	100	100	100	77.2	100	100	100	100	100	100	100	100	-
	F_{R2}	2140	2300	2530	2560	2560	2560	2560	2560	2560	2560	2560	2560	2560	2560	2260	-
609	P_1	1.52	1.52	1.24	1.19	1.06	0.934	0.756	0.588	0.547	0.453	0.369	0.239	0.196	0.148	0.154	0.072
	M_2	115	153	172	196	200	200	200	185	200	200	200	153	146	132	169	108
	F_{R2}	3340	3340	3340	3240	3240	3240	3240	3340	3240	3240	3240	3340	3340	3340	3340	3340
610	P_1	2.26	2.20	2.22	1.83	1.59	1.40	1.13	0.952	0.821	0.680	0.554	0.462	0.398	0.295	0.274	0.172
	M_2	171	222	308	300	300	300	300	300	300	300	300	297	296	264	300	258
	F_{R2}	4430	4920	5400	5400	5400	5400	5400	5400	5400	5400	5400	5120	4880	4680	4690	4660
611	P_1	2.56	3.92	3.03	2.56	2.22	1.96	1.59	1.33	1.15	0.952	0.775	0.654	0.565	0.469	0.383	-
	M_2	193	395	420	420	420	420	420	420	420	420	420	420	420	420	420	-
	F_{R2}	5100	5510	6350	6620	6960	6760	6690	6430	6320	6380	6660	6660	6680	6640	6670	-
612	P_1	4.85	4.72	4.09	3.69	3.33	2.94	2.38	2.00	1.72	1.43	1.16	0.980	0.847	0.661	0.575	-
	M_2	366	476	567	605	630	630	630	630	630	630	630	630	630	592	630	-
	F_{R2}	6160	6740	7480	7320	6760	6740	6740	6740	6740	6740	6870	6740	6740	7610	6740	-
613	P_1	7.87	7.27	6.78	5.74	4.97	4.39	3.55	2.86	2.57	2.13	1.73	1.49	1.41	1.160	0.893	-
	M_2	595	733	940	940	940	940	940	900	940	940	940	959	1050	1040	979	-
	F_{R2}	6450	7220	8240	8680	8920	9620	10300	10800	11400	12100	13000	13300	14200	14300	14500	-
614	P_1	9.48	9.20	9.32	8.36	7.18	6.40	5.06	4.35	3.75	3.10	2.53	2.13	1.84	1.48	1.14	-
	M_2	717	928	1290	1370	1360	1370	1340	1370	1370	1370	1370	1370	1370	1320	1250	-
	F_{R2}	10900	12000	13500	13800	14500	14500	14700	14500	14200	14400	14100	14200	16000	16000	16000	-
616	P_1	17.50	17.80	15.20	12.80	11.10	9.80	7.94	6.67	5.75	4.76	3.88	3.27	2.82	2.35	1.87	-
	M_2	1320	1790	2100	2100	2100	2100	2100	2100	2100	2100	2100	2100	2100	2100	2050	-
	F_{R2}	12500	13800	15800	16600	17700	18400	19900	21000	22000	22100	22100	22100	22100	22100	21800	-
617	P_1	24.60	25.80	22.70	19.20	16.70	14.70	11.90	10.00	8.62	7.14	5.81	4.90	4.24	3.52	2.87	-
	M_2	1860	2600	3150	3150	3150	3150	3150	3150	3150	3150	3150	3150	3150	3150	3150	-
	F_{R2}	13900	15200	17500	18400	19400	20400	22300	23300	24600	26300	28200	29500	29500	29500	29500	-
618	P_1	-	-	34.70	29.90	23.50	22.40	18.90	15.90	13.70	11.30	9.23	7.78	6.73	5.05	4.56	-
	M_2	-	-	4810	4900	4440	4790	5000	5000	5000	5000	5000	5000	5000	4510	5000	-
	F_{R2}	-	-	23300	24400	26000	27400	29800	31200	32700	35100	37800	39400	41300	41700	41700	-
619	P_1	-	-	48.100	42.60	39.20	37.20	30.10	25.30	21.80	18.00	14.70	12.40	10.70	8.90	7.26	-
	M_2	-	-	6670	6980	7410	7960	7960	7960	7960	7960	7960	7960	7960	7960	7960	-
	F_{R2}	-	-	32800	34100	35800	37900	41400	43500	45900	48700	52600	55000	57900	58000	58400	-

* For larger unit ratings, please refer to page 368

Cyclo Gearboxes : Reducer selection

SPEED REDUCER SELECTION TABLES - 980RPM INPUT

These rating tables are based on a service factor of 1.0 - suitable for 10hrs/day at Uniform Load.

M_2 = Allowable output torque (Nm)
F_{R2} = Allowable Radial load applied to middle of shaft (N)
P_1 = Allowable Input Power (kW)
n_2 = Output Speed (rpm)

Unit Size	n_2	163	123	89.1	75.4	65.3	57.6	46.7	39.2	33.8	28.0	22.8	19.2	16.6	13.8	11.3	8.24
	Ratio	6	8	11	13	15	17	21	25	29	35	43	51	59	71	87	119
606	P_1	0.286	0.286	0.286	0.249	0.216	0.191	0.154	0.130	0.112	0.093	0.075	-	-	-	-	-
	M_2	15.9	21.2	29.2	30.0	30.0	30.0	30.0	30.0	30.0	30.0	30.0	-	-	-	-	-
	F_{R2}	802	861	968	1050	1170	1180	1180	1180	1180	1180	1180	-	-	-	-	-
607	P_1	0.407	0.386	0.407	0.407	0.404	0.381	0.309	0.245	0.223	0.185	0.151	0.119	0.101	-	-	-
	M_2	22.6	28.6	41.4	49.0	56.1	60.0	60.0	56.8	60.0	60.0	60.0	56.4	55.1	-	-	-
	F_{R2}	1420	1570	1730	1770	1770	1770	1770	1770	1770	1770	1660	1590	1620	-	-	-
608	P_1	0.778	0.778	0.778	0.778	0.720	0.635	0.397	0.432	0.372	0.309	0.251	0.212	0.183	0.152	0.121	-
	M_2	43.2	57.6	79.2	93.6	100	100	77.2	100	100	100	100	100	100	100	97.6	-
	F_{R2}	1940	2090	2290	2440	2530	2560	2560	2560	2500	2560	2560	2560	2560	2560	2560	-
609	P_1	1.52	1.52	1.52	1.51	1.44	1.27	1.03	0.745	0.698	0.610	0.471	0.325	0.267	0.201	0.195	0.098
	M_2	84.2	112	154	182	200	200	200	172	187	198	187	153	146	132	157	108
	F_{R2}	3340	3340	3340	3340	3240	3240	3340	3340	3340	3320	3340	3340	3340	3340	3340	3340
610	P_1	3.02	2.78	2.86	2.49	2.16	1.91	1.54	1.30	1.12	0.926	0.754	0.629	0.530	0.402	0.372	0.235
	M_2	168	206	291	300	300	300	300	300	300	300	300	297	290	264	300	258
	F_{R2}	3980	4430	5000	5220	5400	5400	5400	5400	5400	5400	5400	5120	4880	4680	4690	4660
611	P_1	3.48	3.92	3.92	3.49	3.02	2.67	2.16	1.81	1.56	1.30	1.06	0.890	0.769	0.639	0.521	-
	M_2	193	290	399	420	420	420	420	420	420	420	420	420	420	420	420	-
	F_{R2}	4580	5050	5710	5930	6360	6460	6690	6430	6320	6380	6660	6660	6680	6640	6670	-
612	P_1	6.40	5.97	5.18	4.68	4.54	4.00	3.24	2.72	2.35	1.94	1.58	1.33	1.15	0.843	0.761	-
	M_2	355	442	527	563	630	630	630	630	630	630	630	630	630	554	613	-
	F_{R2}	5530	6070	6740	7110	6760	6740	6740	6740	6740	6740	6870	6740	6740	8320	7150	-
613	P_1	9.96	9.20	9.23	7.58	6.77	5.97	4.84	3.89	3.50	2.90	2.36	1.89	1.81	1.50	1.22	-
	M_2	553	682	940	912	940	940	940	900	940	940	940	892	987	987	979	-
	F_{R2}	5800	6490	7360	7780	7980	8620	9270	9730	10300	10900	11700	12300	12900	13800	14500	-
614	P_1	12.2	11.6	12.1	11.4	9.78	8.71	6.88	5.92	5.10	4.23	3.44	2.74	2.36	1.94	1.55	-
	M_2	678	863	1230	1370	1360	1370	1340	1370	1370	1370	1370	1290	1290	1280	1250	-
	F_{R2}	9890	11000	12300	12500	13200	13800	14700	14500	14200	14400	14100	14500	16000	16000	16000	-
616	P_1	23.8	22.5	20.6	17.4	15.1	13.3	10.8	9.07	7.82	6.48	5.28	4.45	3.84	3.19	2.55	-
	M_2	1320	1670	2100	2100	2100	2100	2100	2100	2100	2100	2100	2100	2100	2100	2050	-
	F_{R2}	11100	12400	14100	14900	15900	16500	17800	18800	19700	21000	22100	22100	22100	22100	21800	-
617	P_1	30.1	30.1	30.1	26.2	22.3	20.0	16.2	13.6	11.7	9.72	7.91	6.67	5.77	4.79	3.91	-
	M_2	1670	2230	3070	3150	3100	3150	3150	3150	3150	3150	3150	3150	3150	3150	3150	-
	F_{R2}	12600	13800	15600	16400	17300	18200	20000	20800	22100	23600	25200	26500	27900	29500	29500	-
618	P_1	-	-	39.0	39.0	29.8	28.3	25.7	21.6	18.6	15.4	12.6	10.6	9.15	6.87	6.21	-
	M_2	-	-	3970	4690	4130	4450	5000	5000	5000	5000	5000	5000	5000	4510	5000	-
	F_{R2}	-	-	21200	21900	23400	24700	26700	27900	29300	31500	33900	35400	37100	39800	41700	-
619	P_1	-	-	48.1	48.1	48.1	48.1	40.9	34.4	29.6	24.6	20.0	16.9	14.6	12.1	9.88	-
	M_2	-	-	4900	5790	6680	7570	7960	7960	7960	7960	7960	7960	7960	7960	7960	-
	F_{R2}	-	-	30000	31000	32300	34100	37100	39000	41200	43700	47200	49400	52000	55300	58400	-

* For larger unit ratings, please refer to page 368

Cyclo Gearboxes : Reducer selection

SPEED REDUCER SELECTION TABLES - 1450RPM INPUT

These rating tables are based on a service factor of 1.0 - suitable for 10hrs/day at Uniform Load.

M_2 = Allowable output torque (Nm)
F_{R2} = Allowable Radial load applied to middle of shaft (N)
P_1 = Allowable Input Power (kW)
n_2 = Output Speed (rpm)

Unit Size	n_2	242	181	132	112	96.7	85.5	69.0	58.0	50.0	41.4	33.7	28.4	24.6	20.4	16.7	12.2
	Ratio	6	8	11	13	15	17	21	25	29	35	43	51	59	71	87	119
606	P_1	0.286	0.286	0.286	0.286	0.286	0.282	0.228	0.166	0.165	0.137	0.112	-	-	-	-	-
	M_2	10.7	14.3	19.7	23.3	26.9	30.0	30.0	25.9	30.0	30.0	30.0	-	-	-	-	-
	F_{R2}	708	808	1070	1140	1180	1180	1180	1180	1180	1180	1180	-	-	-	-	-
607	P_1	0.407	0.407	0.407	0.407	0.407	0.407	0.407	0.294	0.286	0.272	0.223	0.143	0.136	-	-	-
	M_2	15.3	20.4	28.0	33.1	38.2	43.3	53.5	46.0	52.0	59.6	60.0	45.7	50.1	-	-	-
	F_{R2}	1260	1390	1550	1630	1630	1720	1710	1720	1710	1720	1660	1620	1600	-	-	-
608	P_1	0.778	0.778	0.778	0.778	0.778	0.778	0.550	0.475	0.467	0.412	0.294	0.241	0.234	0.202	0.121	-
	M_2	29.2	38.9	53.5	63.3	73.0	82.7	72.3	74.3	84.8	90.2	79.1	76.9	86.2	89.7	66.0	-
	F_{R2}	1720	1860	2040	2330	2400	2510	2510	2560	2560	2560	2560	2560	2560	2560	2560	-
609	P_1	1.52	1.52	1.52	1.52	1.52	1.52	1.51	0.866	0.784	0.758	0.603	0.407	0.336	0.278	0.263	0.145
	M_2	56.9	75.8	104	123	142	161	198	136	142	166	162	130	124	124	143	108
	F_{R2}	3340	3340	3340	3340	3340	3340	3310	3340	3340	3340	3340	3340	3340	3340	3340	3340
610	P_1	3.18	3.18	3.18	3.18	3.18	2.46	2.28	1.67	1.59	1.20	1.08	0.776	0.681	0.506	0.503	0.286
	M_2	119	159	219	259	298	261	300	262	288	262	292	248	251	225	274	213
	F_{R2}	3530	3920	4430	4590	4830	4960	4970	4970	4970	4970	4970	4980	4910	4700	4700	4690
611	P_1	3.92	3.92	3.92	3.90	3.90	3.90	3.11	2.22	2.22	1.81	1.52	1.11	1.01	0.758	0.758	-
	M_2	147	196	270	317	366	415	409	348	403	396	408	355	373	337	412	-
	F_{R2}	4040	4490	5100	5260	5580	5620	6000	6200	6330	6400	6670	6720	6730	6720	6680	-
612	P_1	6.96	6.95	5.92	5.92	5.92	5.66	4.79	3.96	3.47	2.88	2.34	1.97	1.62	1.14	1.03	-
	M_2	261	348	407	482	556	602	630	619	630	630	630	630	598	506	559	-
	F_{R2}	4910	5370	5970	6260	6560	6820	6740	7010	6740	6750	6870	6750	7470	9110	8240	-
613	P_1	11.3	11.3	11.3	10.2	8.97	8.29	6.72	5.75	4.88	4.11	3.35	2.55	2.44	2.03	1.65	-
	M_2	424	566	778	832	842	882	883	900	886	900	900	813	900	900	900	-
	F_{R2}	5160	5730	6500	6810	6990	7520	8100	8470	8960	9480	10200	10800	11300	12000	13000	-
614	P_1	15.1	15.1	15.1	15.1	14.5	12.0	9.49	7.91	7.53	6.26	4.67	3.70	3.18	2.62	2.16	-
	M_2	569	758	1040	1230	1360	1280	1250	1240	1370	1370	1260	1180	1170	1160	1170	-
	F_{R2}	8810	9750	10900	11100	11600	12200	13100	13800	14100	14400	14600	14900	16000	16000	16000	-
616	P_1	24.1	24.1	24.1	22.6	22.4	18.8	16.0	13.4	11.4	9.59	7.81	6.58	5.69	4.73	3.77	-
	M_2	903	1200	1660	1840	2100	2000	2100	2100	2070	2100	2100	2100	2100	2100	2050	-
	F_{R2}	9990	11100	12500	13100	13800	14300	15500	16300	17100	18300	19600	20600	22100	22100	21800	-
617	P_1	30.1	30.1	30.1	30.1	30.1	24.1	23.6	19.5	17.4	14.4	11.3	9.87	8.29	6.98	5.62	-
	M_2	1130	1510	2070	2450	2820	2560	3100	3050	3150	3150	3040	3150	3060	3100	3060	-
	F_{R2}	11300	12400	14100	14600	15100	16100	17300	18100	19200	20500	22000	23000	24300	25800	27800	-
618	P_1	-	-	39.0	39.0	39.0	38.2	38.1	30.1	24.1	22.6	18.6	15.1	12.0	9.79	8.59	-
	M_2	-	-	2680	3170	3660	4060	5000	4710	4360	4950	5000	4810	4430	4350	4680	-
	F_{R2}	-	-	19000	19600	20500	21600	23200	24400	25800	27500	29500	30900	32500	34800	37400	-
619	P_1	-	-	48.1	48.1	48.1	48.1	48.1	40.5	37.8	30.1	27.1	20.9	18.8	15.6	13.6	-
	M_2	-	-	3310	3910	4510	5120	6320	6330	6860	6600	7300	6680	6950	6930	7420	-
	F_{R2}	-	-	26700	27600	28900	30500	32700	34400	36200	38400	41400	43500	45700	48500	52300	-

* For larger unit ratings, please refer to page 368

Cyclo Gearboxes : Reducer selection

SPEED REDUCER SELECTION TABLES - 2900RPM INPUT

These rating tables are based on a service factor of 1.0 - suitable for 10hrs/day at Uniform Load.

M_2 = Allowable output torque (Nm)
F_{R2} = Allowable Radial load applied to middle of shaft (N)
P_1 = Allowable Input Power (kW)
n_2 = Output Speed (rpm)

Unit Size	n_2	483	362	263	223	193	171	138	116	100	82.9	67.4	56.9	49.2	40.9	33.3	24.4
	Ratio	6	8	11	13	15	17	21	25	29	35	43	51	59	71	87	119
606	P_1	0.286	0.286	0.286	0.249	0.216	0.191	0.154	0.130	0.112	0.093	0.075	-	-	-	-	-
	M_2	15.9	21.2	29.2	30.0	30.0	30.0	30.0	30.0	30.0	30.0	30.0	-	-	-	-	-
	F_{R2}	802	861	968	1050	1170	1180	1180	1180	1180	1180	1180	-	-	-	-	-
607	P_1	0.407	0.386	0.407	0.407	0.404	0.381	0.309	0.245	0.223	0.185	0.151	0.119	0.101	-	-	-
	M_2	22.6	28.6	41.4	49.0	56.1	60.0	60.0	56.8	60.0	60.0	60.0	56.4	55.1	-	-	-
	F_{R2}	1420	1570	1730	1770	1770	1770	1770	1770	1770	1770	1660	1590	1620	-	-	-
608	P_1	0.778	0.778	0.778	0.778	0.720	0.635	0.397	0.432	0.372	0.309	0.251	0.212	0.183	0.152	0.121	-
	M_2	43.2	57.6	79.2	93.6	100	100	77.2	100	100	100	100	100	100	100	97.6	-
	F_{R2}	1940	2090	2290	2440	2530	2560	2560	2560	2500	2560	2560	2560	2560	2560	2560	-
609	P_1	1.52	1.52	1.52	1.51	1.44	1.27	1.03	0.745	0.698	0.610	0.471	0.325	0.267	0.201	0.195	0.098
	M_2	84.2	112	154	182	200	200	200	172	187	198	187	153	146	132	157	108
	F_{R2}	3340	3340	3340	3340	3240	3240	3340	3340	3340	3320	3340	3340	3340	3340	3340	3340
610	P_1	3.02	2.78	2.86	2.49	2.16	1.91	1.54	1.30	1.12	0.926	0.754	0.629	0.530	0.402	0.372	0.235
	M_2	168	206	291	300	300	300	300	300	300	300	300	297	290	264	300	258
	F_{R2}	3980	4430	5000	5220	5400	5400	5400	5400	5400	5400	5400	5120	4880	4680	4690	4660
611	P_1	3.48	3.92	3.92	3.49	3.02	2.67	2.16	1.81	1.56	1.30	1.06	0.890	0.769	0.639	0.521	-
	M_2	193	290	399	420	420	420	420	420	420	420	420	420	420	420	420	-
	F_{R2}	4580	5050	5710	5930	6360	6460	6690	6430	6320	6380	6660	6660	6680	6640	6670	-
612	P_1	6.40	5.97	5.18	4.68	4.54	4.00	3.24	2.72	2.35	1.94	1.58	1.33	1.15	0.843	0.761	-
	M_2	355	442	527	563	630	630	630	630	630	630	630	630	630	554	613	-
	F_{R2}	5530	6070	6740	7110	6760	6740	6740	6740	6740	6740	6870	6740	6740	8320	7150	-
613	P_1	9.96	9.20	9.23	7.58	6.77	5.97	4.84	3.89	3.50	2.90	2.36	1.89	1.81	1.50	1.22	-
	M_2	553	682	940	912	940	940	940	900	940	940	940	892	987	987	979	-
	F_{R2}	5800	6490	7360	7780	7980	8620	9270	9730	10300	10900	11700	12300	12900	13800	14500	-
614	P_1	12.2	11.6	12.1	11.4	9.78	8.71	6.88	5.92	5.10	4.23	3.44	2.74	2.36	1.94	1.55	-
	M_2	678	863	1230	1370	1360	1370	1340	1370	1370	1370	1370	1290	1290	1280	1250	-
	F_{R2}	9890	11000	12300	12500	13200	13800	14700	14500	14200	14400	14100	14500	16000	16000	16000	-
616	P_1	23.8	22.5	20.6	17.4	15.1	13.3	10.8	9.07	7.82	6.48	5.28	4.45	3.84	3.19	2.55	-
	M_2	1320	1670	2100	2100	2100	2100	2100	2100	2100	2100	2100	2100	2100	2100	2050	-
	F_{R2}	11100	12400	14100	14900	15900	16500	17800	18800	19700	21000	22100	22100	22100	22100	21800	-
617	P_1	30.1	30.1	30.1	26.2	22.3	20.0	16.2	13.6	11.7	9.72	7.91	6.67	5.77	4.79	3.91	-
	M_2	1670	2230	3070	3150	3100	3150	3150	3150	3150	3150	3150	3150	3150	3150	3150	-
	F_{R2}	12600	13800	15600	16400	17300	18200	20000	20800	22100	23600	25200	26500	27900	29500	29500	-
618	P_1	-	-	39.0	39.0	29.8	28.3	25.7	21.6	18.6	15.4	12.6	10.6	9.15	6.87	6.21	-
	M_2	-	-	3970	4690	4130	4450	5000	5000	5000	5000	5000	5000	5000	4510	5000	-
	F_{R2}	-	-	21200	21900	23400	24700	26700	27900	29300	31500	33900	35400	37100	39800	41700	-
619	P_1	-	-	48.1	48.1	48.1	48.1	40.9	34.4	29.6	24.6	20.0	16.9	14.6	12.1	9.88	-
	M_2	-	-	4900	5790	6680	7570	7960	7960	7960	7960	7960	7960	7960	7960	7960	-
	F_{R2}	-	-	30000	31000	32300	34100	37100	39000	41200	43700	47200	49400	52000	55300	58400	-

* For larger unit ratings, please refer to page 368

Cyclo Gearboxes : Reducer selection

TWO STAGE REDUCER SELECTION - 580RPM INPUT

These rating tables are based on a service factor of 1.0 - suitable for 10hrs/day at Uniform Load.

M_2 = Allowable output torque (Nm)
F_{R2} = Allowable Radial load applied to middle of shaft (N)
P_1 = Allowable Input Power (kW)
n_2 = Output Speed (rpm)

Unit Size	n_2	5.58	4.79	4.06	3.52	2.97	2.51	2.12	1.82	1.62	1.54	1.36	1.23	1.10	1.04	0.975	0.894	0.793
	Ratio	104	121	143	165	195	231	273	319	357	377	425	473	525	559	595	649	731
606DA	P_1	0.040	0.040	0.040	0.040	0.040	0.040	0.040	0.040	0.040	0.040	0.040	0.040	0.040	0.040	0.040	-	0.040
	M_2	30.0	30.0	30.0	30.0	30.0	30.0	30.0	30.0	30.0	30.0	30.0	30.0	30.0	30.0	30.0	-	30.0
	F_{R2}	1180	1140	1180	1180	1180	1180	1180	1180	1180	1180	1180	1180	1180	1180	1180	-	1180
607DA	P_1	0.040	0.040	0.040	0.040	0.040	0.040	0.040	0.040	0.040	0.040	0.040	0.040	0.040	0.040	0.040	0.040	0.040
	M_2	60.0	50.8	60.0	60.0	60.0	60.0	60.0	60.0	60.0	60.0	60.0	60.0	60.0	60.0	60.0	57.4	60.0
	F_{R2}	1770	1770	1770	1770	1770	1770	1770	1770	1770	1770	1770	1660	1770	1660	1770	1580	1660
609DA	P_1	0.117	0.089	0.087	0.082	0.069	0.058	0.049	0.042	0.040	0.040	0.040	0.040	0.040	0.040	0.040	0.040	0.040
	M_2	181	160	183	200	200	200	200	200	200	200	195	200	195	200	200	146	200
	F_{R2}	3340	3340	3340	3340	3340	3340	3340	3200	3340	3200	3190	3220	3190	3220	3200	3300	3220
610DA	P_1	0.195	0.172	0.142	0.123	0.104	0.088	0.074	0.063	0.057	0.054	0.048	0.043	0.040	0.040	0.040	0.040	0.040
	M_2	300	308	300	300	300	300	300	300	300	300	300	300	300	300	300	296	300
	F_{R2}	5400	5400	5400	5400	5400	5400	5400	5400	5400	5400	5400	5400	5400	5400	5400	5090	5400
612DA	P_1	0.304	0.308	0.297	0.258	0.218	0.184	0.156	0.133	0.119	0.113	0.100	0.090	0.081	0.076	0.071	0.066	0.058
	M_2	469	552	630	630	630	630	630	630	630	630	630	630	630	630	630	630	630
	F_{R2}	9810	9810	9810	9810	9810	9810	9810	9810	9810	9810	9810	9810	9810	9810	9810	9810	9810
612DB	P_1	0.409	0.347	0.297	0.258	0.218	0.184	0.156	0.133	0.119	0.113	0.100	0.090	0.081	0.076	0.071	0.066	0.058
	M_2	630	622	630	630	630	630	630	630	630	630	630	630	630	630	630	630	630
	F_{R2}	9810	9810	9810	9810	9810	9810	9810	9810	9810	9810	9810	9810	9810	9810	9810	9810	9810
613DB	P_1	0.610	0.524	0.444	0.384	0.325	0.275	0.232	0.199	0.178	0.168	0.143	0.134	0.116	0.113	0.107	0.109	0.087
	M_2	940	940	940	940	940	940	940	940	940	940	900	940	900	940	940	1050	940
	F_{R2}	14700	14700	14700	14700	14700	14700	14700	14700	14700	14700	14700	14700	14700	14700	14700	14700	14700
613DC	P_1	0.610	0.524	0.444	0.384	0.325	0.275	0.232	0.199	0.178	0.168	0.143	0.134	0.116	0.113	0.107	0.109	0.087
	M_2	940	940	940	940	940	940	940	940	940	940	900	940	900	940	940	1050	940
	F_{R2}	14700	14700	14700	14700	14700	14700	14700	14700	14700	14700	14700	14700	14700	14700	14700	14700	14700
614DC	P_1	0.889	0.721	0.646	0.555	0.470	0.391	0.331	0.290	0.253	0.245	0.218	0.195	0.176	0.165	0.155	0.142	0.126
	M_2	1370	1290	1370	1360	1360	1340	1340	1370	1340	1370	1370	1370	1370	1370	1370	1370	1370
	F_{R2}	15900	16000	15900	16000	16000	16000	16000	15800	16000	15800	16000	15700	16000	15700	16000	16000	15700
616DB	P_1	1.36	1.17	0.991	0.859	0.727	0.613	0.519	0.444	0.397	0.376	0.333	0.300	0.270	0.254	0.238	0.218	0.194
	M_2	2100	2100	2100	2100	2100	2100	2100	2100	2100	2100	2100	2100	2100	2100	2100	2100	2100
	F_{R2}	22100	22100	22100	22100	22100	22100	22100	22100	22100	22100	22100	22100	22100	22100	22100	22100	22100
616DC	P_1	1.36	1.17	0.991	0.859	0.727	0.613	0.519	0.444	0.397	0.376	0.333	0.300	0.270	0.254	0.238	0.218	0.194
	M_2	2100	2100	2100	2100	2100	2100	2100	2100	2100	2100	2100	2100	2100	2100	2100	2100	2100
	F_{R2}	22100	22100	22100	22100	22100	22100	22100	22100	22100	22100	22100	22100	22100	22100	22100	22100	22100
617DC	P_1	2.04	1.76	1.49	1.29	1.09	0.920	0.779	0.666	0.595	0.564	0.500	0.449	0.405	0.380	0.357	0.328	0.291
	M_2	3150	3150	3150	3150	3150	3150	3150	3150	3150	3150	3150	3150	3150	3150	3150	3150	3150
	F_{R2}	29500	29500	29500	29500	29500	29500	29500	29500	29500	29500	29500	29500	29500	29500	29500	29500	29500
618DB	P_1	3.18	2.68	2.31	2.01	1.70	1.46	1.24	1.06	0.945	0.895	0.794	0.713	0.643	0.604	0.567	0.520	0.462
	M_2	4900	4810	4900	4920	4920	5000	5000	5000	5000	5000	5000	5000	5000	5000	5000	5000	5000
	F_{R2}	41700	41700	41700	41700	41700	41700	41700	41700	41700	41700	41700	41700	41700	41700	41700	41600	41700
619DA	P_1	4.22	3.66	3.60	3.23	2.74	2.33	1.97	1.68	1.50	1.42	1.26	1.14	1.02	0.961	0.903	0.828	0.735
	M_2	6510	6560	7630	7910	7910	7960	7960	7960	7960	7960	7960	7960	7960	7960	7960	7960	7960
	F_{R2}	58200	59000	58200	58300	58300	59000	59000	59000	59000	59000	59000	59000	59000	59000	58600	58100	59000
619DB	P_1	4.95	4.23	3.60	3.23	2.74	2.33	1.97	1.68	1.50	1.42	1.26	1.14	1.02	0.961	0.903	0.828	0.735
	M_2	7630	7580	7630	7910	7910	7960	7960	7960	7960	7960	7960	7960	7960	7960	7960	7960	7960
	F_{R2}	58200	59000	58200	58300	58300	59000	59000	59000	59000	59000	59000	59000	59000	59000	58600	58100	59000

* For larger unit ratings, please refer to page 368

Cyclo Gearboxes : Reducer selection

TWO STAGE REDUCER SELECTION - 720RPM INPUT

These rating tables are based on a service factor of 1.0 - suitable for 10hrs/day at Uniform Load.

M_2 = Allowable output torque (Nm)
F_{R2} = Allowable Radial load applied to middle of shaft (N)
P_1 = Allowable Input Power (kW)
n_2 = Output Speed (rpm)

Unit Size	n_2	6.92	5.95	5.03	4.36	3.69	3.12	2.64	2.26	2.02	1.91	1.69	1.52	1.37	1.29	1.21	1.11	0.985
	Ratio	104	121	143	165	195	231	273	319	357	377	425	473	525	559	595	649	731
606DA	P_1	0.050	0.050	0.050	0.050	0.050	0.050	0.050	0.050	0.050	0.050	0.050	0.050	0.050	0.050	0.050	-	0.050
	M_2	30.0	30.0	30.0	30.0	30.0	30.0	30.0	30.0	30.0	30.0	30.0	30.0	30.0	30.0	30.0	-	30.0
	F_{R2}	1180	1140	1180	1180	1180	1180	1180	1180	1180	1180	1180	1180	1180	1180	1180	-	1180
607DA	P_1	0.050	0.050	0.050	0.050	0.050	0.050	0.050	0.050	0.050	0.050	0.050	0.050	0.050	0.050	0.050	0.050	0.050
	M_2	60.0	50.8	60.0	60.0	60.0	60.0	60.0	60.0	60.0	60.0	60.0	60.0	60.0	60.0	60.0	57.4	60.0
	F_{R2}	1770	1770	1770	1770	1770	1770	1770	1770	1770	1770	1770	1660	1770	1660	1770	1580	1660
609DA	P_1	0.146	0.111	0.107	0.102	0.086	0.073	0.061	0.053	0.050	0.050	0.050	0.050	0.050	0.050	0.050	0.050	0.050
	M_2	181	160	183	200	200	200	200	200	200	200	195	200	195	200	200	146	200
	F_{R2}	3340	3340	3340	3340	3340	3340	3340	3200	3340	3200	3190	3220	3190	3220	3200	3300	3220
610DA	P_1	0.242	0.213	0.176	0.152	0.129	0.109	0.092	0.079	0.070	0.067	0.059	0.053	0.050	0.050	0.050	0.050	0.050
	M_2	300	308	300	300	300	300	300	300	300	300	300	300	300	300	300	296	300
	F_{R2}	5400	5400	5400	5400	5400	5400	5400	5400	5400	5400	5400	5400	5400	5400	5400	5090	5400
612DA	P_1	0.343	0.363	0.363	0.320	0.271	0.228	0.193	0.165	0.148	0.140	0.124	0.112	0.101	0.094	0.089	0.081	0.072
	M_2	426	524	620	630	630	630	630	630	630	630	630	630	630	630	630	630	630
	F_{R2}	9810	9810	9810	9810	9810	9810	9810	9810	9810	9810	9810	9810	9810	9810	9810	9810	9810
612DB	P_1	0.507	0.431	0.369	0.320	0.271	0.228	0.193	0.165	0.148	0.140	0.124	0.112	0.101	0.094	0.089	0.081	0.072
	M_2	630	622	630	630	630	630	630	630	630	630	630	630	630	630	630	630	630
	F_{R2}	9810	9810	9810	9810	9810	9810	9810	9810	9810	9810	9810	9810	9810	9810	9810	9810	9810
613DB	P_1	0.757	0.651	0.551	0.477	0.404	0.341	0.288	0.247	0.221	0.209	0.177	0.166	0.144	0.141	0.132	0.136	0.108
	M_2	940	940	940	940	940	940	940	940	940	940	940	940	940	940	940	1050	940
	F_{R2}	14700	14700	14700	14700	14700	14700	14700	14700	14700	14700	14700	14700	14700	14700	14700	14700	14700
613DC	P_1	0.757	0.651	0.551	0.477	0.404	0.341	0.288	0.247	0.221	0.209	0.177	0.166	0.144	0.141	0.132	0.136	0.108
	M_2	940	940	940	940	940	940	940	940	940	940	940	940	940	940	940	1050	940
	F_{R2}	14700	14700	14700	14700	14700	14700	14700	14700	14700	14700	14700	14700	14700	14700	14700	14700	14700
614DC	P_1	1.10	0.894	0.803	0.689	0.583	0.485	0.411	0.360	0.314	0.304	0.270	0.243	0.219	0.205	0.193	0.177	0.157
	M_2	1370	1290	1370	1360	1360	1340	1340	1370	1340	1370	1370	1370	1370	1370	1370	1370	1370
	F_{R2}	15900	16000	15900	16000	16000	16000	16000	15800	16000	15800	16000	15700	16000	15700	16000	16000	15700
616DB	P_1	1.69	1.45	1.23	1.07	0.902	0.762	0.644	0.551	0.493	0.467	0.414	0.372	0.335	0.315	0.296	0.271	0.241
	M_2	2100	2100	2100	2100	2100	2100	2100	2100	2100	2100	2100	2100	2100	2100	2100	2100	2100
	F_{R2}	22100	22100	22100	22100	22100	22100	22100	22100	22100	22100	22100	22100	22100	22100	22100	22100	22100
616DC	P_1	1.69	1.45	1.23	1.07	0.902	0.762	0.644	0.551	0.493	0.467	0.414	0.372	0.335	0.315	0.296	0.271	0.241
	M_2	2100	2100	2100	2100	2100	2100	2100	2100	2100	2100	2100	2100	2100	2100	2100	2100	2100
	F_{R2}	22100	22100	22100	22100	22100	22100	22100	22100	22100	22100	22100	22100	22100	22100	22100	22100	22100
617DC	P_1	2.54	2.18	1.85	1.60	1.35	1.14	0.967	0.827	0.739	0.700	0.621	0.558	0.503	0.472	0.443	0.407	0.361
	M_2	3150	3150	3150	3150	3150	3150	3150	3150	3150	3150	3150	3150	3150	3150	3150	3150	3150
	F_{R2}	29500	29500	29500	29500	29500	29500	29500	29500	29500	29500	29500	29500	29500	29500	29500	29500	29500
618DB	P_1	3.95	3.33	2.87	2.50	2.11	1.81	1.53	1.31	1.17	1.11	0.986	0.886	0.798	0.749	0.704	0.645	0.573
	M_2	4900	4810	4900	4920	4920	5000	5000	5000	5000	5000	5000	5000	5000	5000	5000	5000	5000
	F_{R2}	41700	41700	41700	41700	41700	41700	41700	41700	41700	41700	41700	41700	41700	41700	41700	41700	41700
619DA	P_1	4.98	4.32	4.32	3.93	3.40	2.89	2.44	2.09	1.87	1.77	1.57	1.41	1.27	1.19	1.12	1.03	0.912
	M_2	6180	6230	7370	7750	7910	7960	7960	7960	7960	7960	7960	7960	7960	7960	7960	7960	7960
	F_{R2}	58800	59000	58300	58400	58300	59000	59000	59000	59000	59000	59000	59000	59000	59000	58600	58100	59000
619DB	P_1	6.14	5.25	4.47	4.02	3.40	2.89	2.44	2.09	1.87	1.77	1.57	1.41	1.27	1.19	1.12	1.03	0.912
	M_2	7630	7580	7630	7910	7910	7960	7960	7960	7960	7960	7960	7960	7960	7960	7960	7960	7960
	F_{R2}	58200	59000	58200	58300	58300	59000	59000	59000	59000	59000	59000	59000	59000	59000	58600	58100	59000

* For larger unit ratings, please refer to page 368

Cyclo Gearboxes : Reducer selection

TWO STAGE REDUCER SELECTION - 980RPM INPUT

These rating tables are based on a service factor of 1.0 - suitable for 10hrs/day at Uniform Load.

M_2 = Allowable output torque (Nm)
F_{R2} = Allowable Radial load applied to middle of shaft (N)
P_1 = Allowable Input Power (kW)
n_2 = Output Speed (rpm)

Unit Size	n_2	9.42	8.10	6.85	5.94	5.03	4.24	3.59	3.07	2.75	2.60	2.31	2.07	1.87	1.75	1.65	1.51	1.34
	Ratio	104	121	143	165	195	231	273	319	357	377	425	473	525	559	595	649	731
606DA	P_1	0.068	0.068	0.068	0.068	0.068	0.068	0.068	0.068	0.068	0.068	0.068	0.068	0.068	0.068	0.068	-	0.068
	M_2	30.0	30.0	30.0	30.0	30.0	30.0	30.0	30.0	30.0	30.0	30.0	30.0	30.0	30.0	30.0	-	30.0
	F_{R2}	1180	1140	1180	1180	1180	1180	1180	1180	1180	1180	1180	1180	1180	1180	1180	-	1180
607DA	P_1	0.068	0.068	0.068	0.068	0.068	0.068	0.068	0.068	0.068	0.068	0.068	0.068	0.068	0.068	0.068	0.068	0.068
	M_2	60.0	50.8	60.0	60.0	60.0	60.0	60.0	60.0	60.0	60.0	60.0	60.0	60.0	60.0	60.0	57.4	60.0
	F_{R2}	1770	1770	1770	1770	1770	1770	1770	1770	1770	1770	1770	1660	1770	1660	1770	1580	1660
609DA	P_1	0.198	0.151	0.146	0.138	0.117	0.099	0.084	0.071	0.068	0.068	0.068	0.068	0.068	0.068	0.068	0.068	0.068
	M_2	181	160	183	200	200	200	200	200	200	200	195	200	195	200	200	146	200
	F_{R2}	3340	3340	3340	3340	3340	3340	3340	3200	3340	3200	3190	3220	3190	3220	3200	3300	3220
610DA	P_1	0.329	0.290	0.239	0.207	0.175	0.148	0.125	0.107	0.096	0.091	0.080	0.072	0.068	0.068	0.068	0.068	0.068
	M_2	300	308	300	300	300	300	300	300	300	300	300	300	300	300	300	296	300
	F_{R2}	5400	5400	5400	5400	5400	5400	5400	5400	5400	5400	5400	5400	5400	5400	5400	5400	5400
612DA	P_1	0.407	0.429	0.429	0.429	0.368	0.311	0.263	0.225	0.201	0.191	0.169	0.152	0.137	0.129	0.121	0.111	0.098
	M_2	372	456	539	621	630	630	630	630	630	630	630	630	630	630	630	630	630
	F_{R2}	9810	9810	9810	9810	9810	9810	9810	9810	9810	9810	9810	9810	9810	9810	9810	9810	9810
612DB	P_1	0.691	0.586	0.502	0.435	0.368	0.311	0.263	0.225	0.201	0.191	0.169	0.152	0.137	0.129	0.121	0.111	0.098
	M_2	630	622	630	630	630	630	630	630	630	630	630	630	630	630	630	630	630
	F_{R2}	9810	9810	9810	9810	9810	9810	9810	9810	9810	9810	9810	9810	9810	9810	9810	9810	9810
613DB	P_1	1.03	0.886	0.750	0.650	0.550	0.464	0.393	0.336	0.300	0.284	0.241	0.227	0.195	0.192	0.180	0.184	0.147
	M_2	940	940	940	940	940	940	940	940	940	940	940	940	900	940	940	1050	940
	F_{R2}	14700	14700	14700	14700	14700	14700	14700	14700	14700	14700	14700	14700	14700	14700	14700	14700	14700
613DC	P_1	1.03	0.886	0.750	0.650	0.550	0.464	0.393	0.336	0.300	0.284	0.241	0.227	0.195	0.192	0.180	0.184	0.147
	M_2	940	940	940	940	940	940	940	940	940	940	940	940	900	940	940	1050	940
	F_{R2}	14700	14700	14700	14700	14700	14700	14700	14700	14700	14700	14700	14700	14700	14700	14700	14700	14700
614DC	P_1	1.50	1.22	1.09	0.940	0.790	0.660	0.560	0.490	0.430	0.410	0.370	0.330	0.300	0.280	0.260	0.240	0.210
	M_2	1370	1290	1370	1360	1360	1340	1340	1370	1340	1370	1370	1370	1370	1370	1370	1370	1370
	F_{R2}	15900	16000	15900	16000	16000	16000	16000	15800	16000	15800	16000	15700	16000	15700	16000	16000	15700
616DB	P_1	2.30	1.98	1.67	1.45	1.23	1.04	0.877	0.751	0.671	0.635	0.563	0.506	0.456	0.428	0.402	0.369	0.328
	M_2	2100	2100	2100	2100	2100	2100	2100	2100	2100	2100	2100	2100	2100	2100	2100	2100	2100
	F_{R2}	22100	22100	22100	22100	22100	22100	22100	22100	22100	22100	22100	22100	22100	22100	22100	22100	22100
616DC	P_1	2.30	1.98	1.67	1.45	1.23	1.04	0.877	0.751	0.671	0.635	0.563	0.506	0.456	0.428	0.402	0.369	0.328
	M_2	2100	2100	2100	2100	2100	2100	2100	2100	2100	2100	2100	2100	2100	2100	2100	2100	2100
	F_{R2}	22100	22100	22100	22100	22100	22100	22100	22100	22100	22100	22100	22100	22100	22100	22100	22100	22100
617DC	P_1	3.45	2.97	2.51	2.18	1.84	1.55	1.32	1.13	1.01	0.950	0.850	0.760	0.680	0.640	0.600	0.550	0.490
	M_2	3150	3150	3150	3150	3150	3150	3150	3150	3150	3150	3150	3150	3150	3150	3150	3150	3150
	F_{R2}	29500	29500	29500	29500	29500	29500	29500	29500	29500	29500	29500	29500	29500	29500	29500	29500	29500
618DB	P_1	5.37	4.53	3.91	3.40	2.88	2.47	2.09	1.79	1.60	1.51	1.34	1.21	1.09	1.02	0.960	0.880	0.780
	M_2	4900	4810	4900	4920	4920	5000	5000	5000	5000	5000	5000	5000	5000	5000	5000	5000	5000
	F_{R2}	41700	41700	41700	41700	41700	41700	41700	41700	41700	41700	41700	41700	41700	41700	41700	41600	41700
619DA	P_1	6.31	5.46	5.31	4.83	4.33	3.93	3.32	2.85	2.54	2.41	2.14	1.92	1.73	1.62	1.53	1.40	1.24
	M_2	5750	5800	6660	6990	7410	7960	7960	7960	7960	7960	7960	7960	7960	7960	7960	7960	7960
	F_{R2}	58900	59000	58600	58600	58500	59000	59000	59000	59000	59000	59000	59000	59000	59000	58600	58100	59000
619DB	P_1	8.36	7.14	6.08	5.46	4.62	3.93	3.32	2.85	2.54	2.41	2.14	1.92	1.73	1.62	1.53	1.40	1.24
	M_2	7630	7580	7630	7910	7910	7960	7960	7960	7960	7960	7960	7960	7960	7960	7960	7960	7960
	F_{R2}	58200	59000	58200	58300	58300	59000	59000	59000	59000	59000	59000	59000	59000	59000	58600	58100	59000

* For larger unit ratings, please refer to page 368

Cyclo Gearboxes : Reducer selection

TWO STAGE REDUCER SELECTION - 1450RPM INPUT

These rating tables are based on a service factor of 1.0 - suitable for 10hrs/day at Uniform Load.

M_2 = Allowable output torque (Nm)
F_{R2} = Allowable Radial load applied to middle of shaft (N)
P_1 = Allowable Input Power (kW)
n_2 = Output Speed (rpm)

Unit Size	n_2	13.9	12.0	10.1	8.79	7.44	6.28	5.31	4.55	4.06	3.85	3.41	3.07	2.76	2.59	2.44	2.23	1.98
	Ratio	104	121	143	165	195	231	273	319	357	377	425	473	525	559	595	649	731
606DA	P_1	0.100	0.100	0.100	0.100	0.100	0.100	0.100	0.100	0.100	0.100	0.100	0.100	0.100	0.100	0.100	-	0.100
	M_2	30.0	30.0	30.0	30.0	30.0	30.0	30.0	30.0	30.0	30.0	30.0	30.0	30.0	30.0	30.0	-	30.0
	F_{R2}	1180	1140	1180	1180	1180	1180	1180	1180	1180	1180	1180	1180	1180	1180	1180	-	1180
607DA	P_1	0.100	0.100	0.100	0.100	0.100	0.100	0.100	0.100	0.100	0.100	0.100	0.100	0.100	0.100	0.100	0.100	0.100
	M_2	60.0	50.8	60.0	60.0	60.0	60.0	60.0	60.0	60.0	60.0	60.0	60.0	60.0	60.0	60.0	57.4	60.0
	F_{R2}	1770	1770	1770	1770	1770	1770	1770	1770	1770	1770	1770	1660	1770	1660	1770	1580	1660
609DA	P_1	0.293	0.224	0.216	0.204	0.173	0.146	0.124	0.106	0.100	0.100	0.100	0.100	0.100	0.100	0.100	0.100	0.100
	M_2	181	160	183	200	200	200	200	200	200	200	195	200	195	200	200	146	200
	F_{R2}	3340	3340	3340	3340	3340	3340	3340	3200	3340	3200	3190	3220	3190	3220	3200	3300	3220
610DA	P_1	0.429	0.429	0.354	0.307	0.260	0.219	0.185	0.159	0.142	0.134	0.119	0.107	0.100	0.100	0.100	0.100	0.100
	M_2	265	308	300	300	300	300	300	300	300	300	300	300	300	300	300	296	300
	F_{R2}	5400	5400	5400	5400	5400	5400	5400	5400	5400	5400	5400	5400	5400	5400	5400	5090	5400
612DA	P_1	0.429	0.429	0.429	0.429	0.429	0.429	0.389	0.333	0.298	0.282	0.250	0.225	0.202	0.190	0.179	0.164	0.145
	M_2	265	308	364	420	496	588	630	630	630	630	630	630	630	630	630	630	630
	F_{R2}	9810	9810	9810	9810	9810	9810	9810	9810	9810	9810	9810	9810	9810	9810	9810	9810	9810
612DB	P_1	1.02	0.867	0.743	0.644	0.545	0.460	0.389	0.333	0.298	0.282	0.250	0.225	0.202	0.190	0.179	0.164	0.145
	M_2	630	622	630	630	630	630	630	630	630	630	630	630	630	630	630	630	630
	F_{R2}	9810	9810	9810	9810	9810	9810	9810	9810	9810	9810	9810	9810	9810	9810	9810	9810	9810
613DB	P_1	1.52	1.31	1.11	0.961	0.813	0.686	0.581	0.497	0.444	0.421	0.357	0.335	0.289	0.284	0.267	0.273	0.217
	M_2	940	940	940	940	940	940	940	940	940	940	900	940	900	940	940	1050	940
	F_{R2}	14700	14700	14700	14700	14700	14700	14700	14700	14700	14700	14700	14700	14700	14700	14700	14700	14700
613DC	P_1	1.52	1.31	1.11	0.961	0.813	0.686	0.581	0.497	0.444	0.421	0.357	0.335	0.289	0.284	0.267	0.273	0.217
	M_2	940	940	940	940	940	940	940	940	940	940	900	940	900	940	940	1050	940
	F_{R2}	14700	14700	14700	14700	14700	14700	14700	14700	14700	14700	14700	14700	14700	14700	14700	14700	14700
614DC	P_1	2.22	1.80	1.62	1.39	1.17	0.977	0.827	0.725	0.632	0.613	0.544	0.489	0.440	0.413	0.388	0.356	0.316
	M_2	1370	1290	1370	1360	1360	1340	1340	1370	1340	1370	1370	1370	1370	1370	1370	1370	1370
	F_{R2}	15900	16000	15900	16000	16000	16000	16000	15800	16000	15800	16000	15700	16000	15700	16000	16000	15700
616DB	P_1	3.36	2.93	2.48	2.15	1.82	1.53	1.30	1.11	0.992	0.940	0.834	0.749	0.675	0.634	0.595	0.546	0.485
	M_2	2070	2100	2100	2100	2100	2100	2100	2100	2100	2100	2100	2100	2100	2100	2100	2100	2100
	F_{R2}	22100	22100	22100	22100	22100	22100	22100	22100	22100	22100	22100	22100	22100	22100	22100	22100	22100
616DC	P_1	3.41	2.93	2.48	2.15	1.82	1.53	1.30	1.11	0.992	0.940	0.834	0.749	0.675	0.634	0.595	0.546	0.485
	M_2	2100	2100	2100	2100	2100	2100	2100	2100	2100	2100	2100	2100	2100	2100	2100	2100	2100
	F_{R2}	22100	22100	22100	22100	22100	22100	22100	22100	22100	22100	22100	22100	22100	22100	22100	22100	22100
617DC	P_1	5.11	4.39	3.72	3.22	2.73	2.30	1.95	1.67	1.49	1.41	1.25	1.12	1.01	0.951	0.893	0.819	0.727
	M_2	3150	3150	3150	3150	3150	3150	3150	3150	3150	3150	3150	3150	3150	3150	3150	3150	3150
	F_{R2}	29500	29500	29500	29500	29500	29500	29500	29500	29500	29500	29500	29500	29500	29500	29500	29500	29500
618DB	P_1	7.95	6.70	5.78	5.03	4.26	3.65	3.09	2.64	2.36	2.24	1.98	1.78	1.61	1.51	1.42	1.30	1.15
	M_2	4900	4810	4900	4920	4920	5000	5000	5000	5000	5000	5000	5000	5000	5000	5000	5000	5000
	F_{R2}	39900	41700	41700	41700	41700	41700	41700	41700	41700	41700	41700	41700	41700	41700	41700	41600	41700
619DA	P_1	7.33	6.25	6.25	6.25	5.63	5.81	4.92	4.21	3.76	3.56	3.16	2.84	2.56	2.40	2.26	2.07	1.84
	M_2	4520	4480	5300	6110	6500	7960	7960	7960	7960	7960	7960	7960	7960	7960	7960	7960	7960
	F_{R2}	56500	59000	59000	59000	58800	59000	59000	59000	59000	59000	59000	59000	59000	59000	58600	58100	59000
619DB	P_1	11.90	10.60	9.00	8.09	6.84	5.81	4.92	4.21	3.76	3.56	3.16	2.84	2.56	2.40	2.26	2.07	1.84
	M_2	7350	7580	7630	7910	7910	7960	7960	7960	7960	7960	7960	7960	7960	7960	7960	7960	7960
	F_{R2}	55400	59000	58200	58300	58300	59000	59000	59000	59000	59000	59000	59000	59000	59000	58600	58100	59000

* For larger unit ratings, please refer to page 368

Cyclo Gearboxes : Reducer selection

TWO STAGE REDUCER SELECTION - 2900RPM INPUT

These rating tables are based on a service factor of 1.0 - suitable for 10hrs/day at Uniform Load.

M_2 = Allowable output torque (Nm)
F_{R2} = Allowable Radial load applied to middle of shaft (N)
P_1 = Allowable Input Power (kW)
n_2 = Output Speed (rpm)

Unit Size	n_2	27.9	24.0	20.3	17.6	14.9	12.6	10.6	9.09	8.12	7.69	6.82	6.13	5.52	5.19	4.87	4.47	3.97
	Ratio	104	121	143	165	195	231	273	319	357	377	425	473	525	559	595	649	731
606DA	P_1	0.200	0.200	0.200	0.200	0.200	0.200	0.200	0.200	0.200	0.200	0.200	0.200	0.200	0.200	0.200	-	0.200
	M_2	30.0	30.0	30.0	30.0	30.0	30.0	30.0	30.0	30.0	30.0	30.0	30.0	30.0	30.0	30.0	-	30.0
	F_{R2}	1180	1140	1180	1180	1180	1180	1180	1180	1180	1180	1180	1180	1180	1180	1180	-	1180
607DA	P_1	0.200	0.200	0.200	0.200	0.200	0.200	0.200	0.200	0.200	0.200	0.200	0.200	0.200	0.200	0.200	0.200	0.200
	M_2	60.0	50.8	60.0	60.0	60.0	60.0	60.0	60.0	60.0	60.0	60.0	60.0	60.0	60.0	60.0	57.4	60.0
	F_{R2}	1770	1770	1770	1770	1770	1770	1770	1770	1770	1770	1770	1660	1770	1660	1770	1580	1660
609DA	P_1	0.422	0.429	0.429	0.409	0.346	0.292	0.247	0.212	0.200	0.200	0.200	0.200	0.200	0.200	0.200	0.200	0.200
	M_2	130	154	182	200	200	200	200	200	200	200	195	200	195	200	200	146	200
	F_{R2}	3340	3340	3340	3340	3340	3340	3340	3200	3340	3200	3190	3220	3190	3220	3200	3300	3220
610DA	P_1	0.422	0.429	0.429	0.429	0.429	0.429	0.371	0.317	0.284	0.268	0.238	0.214	0.200	0.200	0.200	0.200	0.200
	M_2	130	154	182	210	248	294	300	300	300	300	300	300	300	300	300	296	300
	F_{R2}	5400	5400	5400	5400	5400	5400	5400	5400	5400	5400	5400	5400	5400	5400	5400	5090	5400
612DA	P_1	0.422	0.429	0.429	0.429	0.429	0.429	0.429	0.429	0.429	0.429	0.429	0.429	0.405	0.380	0.357	0.328	0.291
	M_2	130	154	182	210	248	294	347	406	454	480	541	602	630	630	630	630	630
	F_{R2}	9810	9810	9810	9810	9810	9810	9810	9810	9810	9810	9810	9810	9810	9810	9810	9810	9810
612DB	P_1	1.19	1.60	1.49	1.29	1.09	0.920	0.779	0.666	0.595	0.564	0.500	0.449	0.405	0.380	0.357	0.328	0.291
	M_2	367	573	630	630	630	630	630	630	630	630	630	630	630	630	630	630	630
	F_{R2}	9810	9810	9810	9810	9810	9810	9810	9810	9810	9810	9810	9810	9810	9810	9810	9810	9810
613DB	P_1	1.19	1.60	1.60	1.60	1.60	1.37	1.16	0.994	0.888	0.841	0.715	0.671	0.578	0.567	0.533	0.546	0.434
	M_2	367	573	678	782	924	940	940	940	940	940	940	940	940	940	940	1050	940
	F_{R2}	12900	13600	14200	14400	14700	14700	14700	14700	14700	14700	14700	14700	14700	14700	14700	14700	14700
613DC	P_1	3.05	2.62	2.22	1.92	1.63	1.37	1.16	0.994	0.888	0.841	0.715	0.671	0.578	0.567	0.533	0.546	0.434
	M_2	940	940	940	940	940	940	940	940	940	940	900	940	900	940	940	1050	940
	F_{R2}	12500	13300	14000	14300	14700	14700	14700	14700	14700	14700	14700	14700	14700	14700	14700	14700	14700
614DC	P_1	3.36	3.36	3.23	2.78	2.35	1.95	1.65	1.45	1.26	1.23	1.09	0.977	0.880	0.827	0.777	0.712	0.632
	M_2	1030	1200	1370	1360	1360	1340	1340	1370	1340	1370	1370	1370	1370	1370	1370	1370	1370
	F_{R2}	16000	16000	15900	16000	16000	16000	16000	15800	16000	15800	16000	15700	16000	15700	16000	16000	15700
616DB	P_1	3.36	3.36	3.36	3.36	3.36	3.07	2.60	2.22	1.98	1.88	1.67	1.50	1.35	1.27	1.19	1.09	0.969
	M_2	1030	1200	1420	1640	1940	2100	2100	2100	2100	2100	2100	2100	2100	2100	2100	2100	2100
	F_{R2}	21900	22100	22100	22100	22100	22100	22100	22100	22100	22100	22100	22100	22100	22100	22100	22100	22100
616DC	P_1	6.81	5.86	4.95	4.29	3.63	3.07	2.60	2.22	1.98	1.88	1.67	1.50	1.35	1.27	1.19	1.09	0.969
	M_2	2100	2100	2100	2100	2100	2100	2100	2100	2100	2100	2100	2100	2100	2100	2100	2100	2100
	F_{R2}	21300	22100	22100	22100	22100	22100	22100	22100	22100	22100	22100	22100	22100	22100	22100	22100	22100
617DC	P_1	7.31	6.25	6.25	6.25	5.45	4.60	3.89	3.33	2.98	2.82	2.50	2.25	2.02	1.90	1.79	1.64	1.45
	M_2	2250	2240	2650	3060	3150	3150	3150	3150	3150	3150	3150	3150	3150	3150	3150	3150	3150
	F_{R2}	24100	25800	26800	28000	29500	29500	29500	29500	29500	29500	29500	29500	29500	29500	29500	29500	29500
618DB	P_1	15.9	13.4	11.6	10.1	8.52	7.30	6.18	5.29	4.73	4.47	3.97	3.57	3.21	3.02	2.84	2.60	2.31
	M_2	4900	4810	4900	4920	4920	5000	5000	5000	5000	5000	5000	5000	5000	5000	5000	5000	5000
	F_{R2}	31200	33400	34900	37000	39200	41700	41700	41700	41700	41700	41700	41700	41700	41700	41700	41600	41700
619DA	P_1	7.31	6.25	6.25	6.25	6.25	6.25	6.25	6.25	5.97	6.25	5.97	5.68	5.12	4.80	4.51	4.14	3.67
	M_2	2250	2240	2650	3060	3610	4280	5060	5910	6320	6980	7520	7960	7960	7960	7960	7960	7960
	F_{R2}	45300	48300	50300	52800	55700	59000	59000	59000	59000	59000	59000	59000	59000	59000	58600	58100	59000
619DB	P_1	21.9	21.1	18.0	16.2	13.7	11.6	9.84	8.42	7.52	7.12	6.32	5.68	5.12	4.80	4.51	4.14	3.67
	M_2	6740	7580	7630	7910	7910	7960	7960	7960	7960	7960	7960	7960	7960	7960	7960	7960	7960
	F_{R2}	43700	46500	48500	51100	54100	58800	59000	59000	59000	59000	59000	59000	59000	59000	58600	58100	59000

* For larger unit ratings, please refer to page 368

Cyclo Gearboxes : Reducer selection

SINGLE STAGE REDUCER SELECTION - 580RPM INPUT

These rating tables are based on a service factor of 1.0 - suitable for 10hrs/day at Uniform Load.

M_2 = Allowable output torque (Nm)
F_{R2} = Allowable Radial load applied to middle of shaft (N)
P_1 = Allowable Input Power (kW)
n_2 = Output Speed (rpm)

Unit Size	n_2	52.7	38.7	27.6	20.0	13.5	9.8	6.7
	Ratio	11	15	21	29	43	59	87
620	P_1	46.8	39.5	28.2	20.3	13.8	10.1	6.43
	M_2	8050	9270	9270	9230	9300	9300	8760
	F_{R2}	67300	72500	81600	84100	84100	84100	84100
621	P_1	64.0	51.9	38.1	27.9	18.8	13.7	8.28
	M_2	11000	12200	12500	12700	12700	12700	11300
	F_{R2}	67300	72600	82500	90200	102000	104000	104000
622	P_1	74.7	61.7	45.1	33.2	23.8	17.2	11.1
	M_2	12900	14500	14800	15000	16000	15900	15100
	F_{R2}	71100	77100	86900	95200	108000	118000	133000
623	P_1	99.9	83.6	57.5	41.7	30.5	22.2	12.6
	M_2	17200	19600	18900	18900	20500	20500	17200
	F_{R2}	88800	95300	108000	119000	133000	146000	166000
624	P_1	117.0	112.0	78.5	56.9	38.4	28.0	16.6
	M_2	20200	26200	25800	25800	25800	25800	22600
	F_{R2}	98600	106000	119000	131000	149000	163000	185000
625	P_1	151.0	133.0	94.4	71.6	51.3	37.4	22.8
	M_2	25900	31200	31000	32500	34500	34500	31000
	F_{R2}	121000	130000	146000	161000	182000	200000	226000
626	P_1	175.0	175.0	140.0	101.0	68.4	49.8	32.3
	M_2	30100	41000	46000	46000	46000	46000	44000
	F_{R2}	148000	158000	177000	197000	222000	243000	274000

SINGLE STAGE REDUCER SELECTION - 720RPM INPUT

Unit Size	n_2	65.5	48.0	34.3	24.8	16.7	12.2	8.3
	Ratio	11	15	21	29	43	59	87
620	P_1	55.2	49.0	35.0	25.3	17.2	12.5	7.99
	M_2	7650	9270	9270	9230	9300	9300	8760
	F_{R2}	63000	67800	76300	83600	84100	84100	84100
621	P_1	75.3	64.4	47.2	34.6	23.3	17.0	10.3
	M_2	10400	12200	12500	12700	12700	12700	11300
	F_{R2}	63000	67900	77200	84400	95800	104000	104000
622	P_1	88.1	76.6	55.9	41.2	29.5	21.4	13.7
	M_2	12200	14500	14800	15000	16000	15900	15100
	F_{R2}	66600	72100	81200	89000	101000	110000	124000
623	P_1	113.0	104.0	71.4	51.7	37.6	27.3	15.7
	M_2	15700	19600	18900	18900	20400	20300	17200
	F_{R2}	83400	89000	101000	111000	125000	137000	155000
624	P_1	132.0	132.0	97.5	70.6	47.6	34.7	20.7
	M_2	18300	24900	25800	25800	25800	25800	22600
	F_{R2}	92600	98800	112000	123000	139000	152000	173000
625	P_1	151.0	151.0	117.0	88.9	61.5	44.9	28.3
	M_2	20900	28500	31000	32500	33300	33400	31000
	F_{R2}	114000	122000	136000	151000	170000	187000	211000
626	P_1	175.0	175.0	172.0	126.0	84.9	61.9	40.2
	M_2	24200	33000	45400	46000	46000	46000	44000
	F_{R2}	140000	149000	166000	184000	208000	228000	257000

Cyclo Gearboxes : Reducer selection

SINGLE STAGE REDUCER SELECTION - 980RPM INPUT

These rating tables are based on a service factor of 1.0 - suitable for 10hrs/day at Uniform Load.

M_2 = Allowable output torque (Nm)
F_{R2} = Allowable Radial load applied to middle of shaft (N)
P_1 = Allowable Input Power (kW)
n_2 = Output Speed (rpm)

Unit Size	n_2	89.1	65.3	46.7	33.8	22.8	16.6	11.3
	Ratio	11	15	21	29	43	59	87
620	P_1	59.7	59.7	47.7	34.4	23.4	17.0	10.9
	M_2	6080	8290	9270	9230	9300	9300	8760
	F_{R2}	57700	61800	69400	76000	84100	84100	84100
621	P_1	75.3	75.3	64.3	47.1	31.8	23.2	14.0
	M_2	7670	10500	12500	12700	12700	12700	11300
	F_{R2}	58000	62000	70100	76600	87100	95100	104000
622	P_1	99.5	99.5	76.1	56.0	40.2	29.1	18.7
	M_2	10100	13800	14800	15000	16000	15900	15100
	F_{R2}	61000	65500	73700	80800	91700	100000	113000
623	P_1	113.0	113.0	97.2	70.4	47.6	34.6	21.3
	M_2	11500	15700	18900	18900	18900	18900	17200
	F_{R2}	76700	81700	91900	101000	114000	125000	141000
624	P_1	132.0	132.0	120.0	94.2	64.8	47.2	28.1
	M_2	13400	18300	23300	25300	25800	25800	22600
	F_{R2}	85200	91100	102000	112000	126000	138000	157000
625	P_1	151.0	151.0	151.0	118.0	77.9	56.8	38.5
	M_2	15300	20900	29300	31800	31000	31000	31000
	F_{R2}	104000	112000	124000	137000	155000	170000	192000
626	P_1	175.0	175.0	172.0	159.0	113.0	84.2	53.4
	M_2	17800	24300	33400	42700	45000	46000	43000
	F_{R2}	128000	137000	152000	168000	189000	207000	234000

SINGLE STAGE REDUCER SELECTION - 1450RPM INPUT

Unit Size	n_2	131.8	96.7	69.0	50.0	33.7	24.6	16.7
	Ratio	11	15	21	29	43	59	87
620	P_1	59.7	59.7	59.2	45.7	31.8	22.6	15.9
	M_2	4110	5600	7780	8280	8550	8340	8650
	F_{R2}	51700	55400	61800	67500	76500	83500	84100
621	P_1	75.3	75.3	75.3	58.5	45.2	33.9	19.7
	M_2	5190	7070	9900	10600	12200	12500	10700
	F_{R2}	52000	55700	62600	68300	77200	84200	95400
622	P_1	99.5	99.5	94.2	75.3	56.5	39.3	26.7
	M_2	6850	9330	12400	13700	15200	14500	14600
	F_{R2}	54800	59000	65700	71800	81300	89000	100000
623	P_1	-	-	-	-	-	-	-
	M_2	-	-	-	-	-	-	-
	F_{R2}	-	-	-	-	-	-	-
624	P_1	-	-	-	-	-	-	-
	M_2	-	-	-	-	-	-	-
	F_{R2}	-	-	-	-	-	-	-
625	P_1	-	-	-	-	-	-	-
	M_2	-	-	-	-	-	-	-
	F_{R2}	-	-	-	-	-	-	-
626	P_1	-	-	-	-	-	-	-
	M_2	-	-	-	-	-	-	-
	F_{R2}	-	-	-	-	-	-	-

Cyclo Gearboxes : Reducer selection

TWO STAGE REDUCER SELECTION - 720RPM INPUT

These rating tables are based on a service factor of 1.0 - suitable for 10hrs/day at Uniform Load.

M_2 = Allowable output torque (Nm)
F_{R2} = Allowable Radial load applied to middle of shaft (N)
P_1 = Allowable Input Power (kW)
n_2 = Output Speed (rpm)

Unit Size	n_2	5.95	4.36	3.69	3.12	2.64	2.26	2.02	1.91	1.52	1.29	1.11	0.985
	Ratio	121	165	195	231	273	319	357	377	473	559	649	731
620DB	P_1	5.97	4.71	3.98	3.36	2.85	2.42	2.18	2.05	1.65	1.39	1.20	1.09
	M_2	8620	9270	9270	9270	9270	9230	9270	9230	9300	9300	9300	9300
	F_{R2}	84100	84100	84100	84100	84100	84100	84100	84100	84100	84100	84100	84100
621DA	P_1	7.16	6.18	5.23	4.53	3.84	3.32	2.93	2.81	2.24	1.90	1.63	1.45
	M_2	10300	12200	12200	12500	12500	12700	12500	12700	12700	12700	12700	12700
	F_{R2}	104000	104000	104000	104000	104000	104000	104000	104000	104000	104000	104000	104000
622DB	P_1	9.32	7.35	6.22	5.37	4.54	3.95	3.47	3.34	2.83	2.40	2.05	1.83
	M_2	13500	14500	14500	14800	14800	15000	14800	15000	16000	16000	15900	16000
	F_{R2}	140000	145000	145000	145000	145000	145000	145000	145000	145000	145000	145000	145000
623DA	P_1	13.0	9.96	8.42	6.85	5.80	4.96	4.43	4.20	3.63	3.07	2.65	2.35
	M_2	18700	19600	19600	18900	18900	18900	18900	18900	20500	20500	20500	20500
	F_{R2}	174000	179000	179000	179000	179000	179000	179000	179000	179000	179000	179000	179000
624DA	P_1	14.2	13.3	11.3	9.36	7.92	6.78	6.05	5.73	4.57	3.87	3.33	2.96
	M_2	20500	26200	26200	25800	25800	25800	25800	25800	25800	25800	25800	25800
	F_{R2}	194000	208000	208000	208000	208000	208000	208000	208000	208000	208000	208000	208000
625DA	P_1	19.0	15.8	13.4	11.2	9.51	8.53	7.27	7.22	6.11	5.17	4.45	3.95
	M_2	27500	31200	31200	31000	31000	32500	31000	32500	34500	34500	34500	34500
	F_{R2}	237000	255000	258000	258000	258000	258000	258000	258000	258000	258000	258000	258000
626DA	P_1	21.7	22.2	18.8	16.7	14.1	12.1	10.8	10.2	8.15	6.89	5.94	5.27
	M_2	31300	43700	43700	46000	46000	46000	46000	46000	46000	46000	46000	46000
	F_{R2}	276000	276000	276000	276000	276000	276000	276000	276000	276000	276000	276000	276000

TWO STAGE REDUCER SELECTION - 980RPM INPUT

Unit Size	n_2	8.10	5.94	5.03	4.24	3.59	3.07	2.75	2.60	2.07	1.75	1.51	1.34
	Ratio	121	165	195	231	273	319	357	377	473	559	649	731
620DB	P_1	8.12	6.41	5.42	4.58	3.87	3.30	2.96	2.79	2.24	1.90	1.63	1.49
	M_2	8620	9270	9270	9270	9270	9230	9270	9230	9300	9300	9300	9300
	F_{R2}	84100	84100	84100	84100	84100	84100	84100	84100	84100	84100	84100	84100
621DA	P_1	9.70	8.40	7.10	6.20	5.20	4.50	4.00	3.80	3.10	2.60	2.20	2.00
	M_2	10300	12200	12200	12500	12500	12700	12500	12700	12700	12700	12700	12700
	F_{R2}	104000	104000	104000	104000	104000	104000	104000	104000	104000	104000	104000	104000
622DB	P_1	12.7	10.0	8.50	7.30	6.20	5.40	4.70	4.60	3.90	3.30	2.80	2.50
	M_2	13500	14500	14500	14800	14800	15000	14800	15000	16000	16000	15900	16000
	F_{R2}	127000	138000	145000	145000	145000	145000	145000	145000	145000	145000	145000	145000
623DA	P_1	17.6	13.6	11.5	9.30	7.90	6.80	6.00	5.70	4.90	4.20	3.60	3.20
	M_2	18700	19600	19600	18900	18900	18900	18900	18900	20500	20500	20500	20500
	F_{R2}	159000	171000	179000	179000	179000	179000	179000	179000	179000	179000	179000	179000
624DA	P_1	19.4	18.1	15.3	12.7	10.8	9.20	8.20	7.80	6.20	5.30	4.50	4.00
	M_2	20500	26200	26200	25800	25800	25800	25800	25800	25800	25800	25800	25800
	F_{R2}	176000	189000	199000	208000	208000	208000	208000	208000	208000	208000	208000	208000
625DA	P_1	25.9	21.5	18.2	15.3	12.9	11.6	9.90	9.82	8.32	7.04	6.06	5.38
	M_2	27500	31200	31200	31000	31000	32500	31000	32500	34500	34500	34500	34500
	F_{R2}	215000	232000	244000	258000	258000	258000	258000	258000	258000	258000	258000	258000
626DA	P_1	29.5	30.2	25.6	22.7	19.2	16.4	14.7	13.9	11.1	9.40	8.10	7.20
	M_2	31300	43700	43700	46000	46000	46000	46000	46000	46000	46000	46000	46000
	F_{R2}	264000	276000	276000	276000	276000	276000	276000	276000	276000	276000	276000	276000

Cyclo Gearboxes : Reducer selection

TWO STAGE REDUCER SELECTION - 1450PM INPUT

These rating tables are based on a service factor of 1.0 - suitable for 10hrs/day at Uniform Load.

M_2 = Allowable output torque (Nm)
F_{R2} = Allowable Radial load applied to middle of shaft (N)
P_1 = Allowable Input Power (kW)
n_2 = Output Speed (rpm)

Unit Size	n_2	12.0	8.79	7.44	6.28	5.31	4.55	4.06	3.85	3.41	3.07	2.76	2.59
	Ratio	121	165	195	231	273	319	357	377	425	473	525	559
620DB	P_1	11.9	9.48	8.02	6.77	5.73	4.88	4.38	4.13	3.32	2.81	2.42	2.20
	M_2	8560	9270	9270	9270	9270	9230	9270	9230	9300	9300	9300	9300
	F_{R2}	84100	84100	84100	84100	84100	84100	84100	84100	84100	84100	84100	84100
621DA	P_1	11.9	11.9	10.5	9.13	7.72	6.69	5.91	5.66	4.51	3.82	3.29	2.92
	M_2	8560	11700	12200	12500	12500	12700	12500	12700	12700	12700	12700	12700
	F_{R2}	104000	104000	104000	104000	104000	104000	104000	104000	104000	104000	104000	104000
622DB	P_1	18.8	14.8	12.5	10.8	9.15	7.95	6.99	6.73	5.71	4.83	4.13	3.69
	M_2	13500	14500	14500	14800	14800	15000	14800	15000	16000	16000	15900	16000
	F_{R2}	113000	122000	129000	137000	145000	145000	145000	145000	145000	145000	145000	145000
623DA	P_1	25.4	20.0	17.0	13.8	11.7	10.0	8.93	8.46	7.31	6.19	5.33	4.73
	M_2	18200	19600	19600	18900	18900	18900	18900	18900	20500	20500	20500	20500
	F_{R2}	141000	151000	159000	171000	179000	179000	179000	179000	179000	179000	179000	179000
624DA	P_1	25.4	25.4	22.7	18.8	15.9	13.6	12.2	11.5	9.20	7.79	6.71	5.95
	M_2	18200	24800	26200	25800	25800	25800	25800	25800	25800	25800	25800	25800
	F_{R2}	157000	168000	177000	189000	199000	208000	208000	208000	208000	208000	208000	208000
625DA	P_1	31.8	31.8	27.0	22.6	19.2	17.2	14.6	14.5	12.3	10.4	8.97	7.96
	M_2	22800	31100	31200	31000	31000	32500	31000	32500	34500	34500	34500	34500
	F_{R2}	192000	206000	216000	231000	243000	255000	258000	258000	258000	258000	258000	258000
626DA	P_1	43.7	44.7	37.8	33.6	28.4	24.3	21.7	20.6	16.4	13.9	12.0	10.6
	M_2	31300	43700	43700	46000	46000	46000	46000	46000	46000	46000	46000	46000
	F_{R2}	234000	250000	263000	276000	276000	276000	276000	276000	276000	276000	276000	276000

TWO STAGE REDUCER SELECTION - 2900RPM INPUT

Unit Size	n_2	24.0	17.6	14.9	12.6	10.6	9.09	8.12	7.69	6.13	5.19	4.47	3.97
	Ratio	121	165	195	231	273	319	357	377	473	559	649	731
620DB	P_1	24.0	19.0	16.0	13.5	11.5	9.76	8.77	8.26	6.63	5.61	4.83	-
	M_2	8620	9270	9270	9270	9270	9230	9270	9230	9300	9300	9300	-
	F_{R2}	84100	84100	84100	84100	84100	84100	84100	84100	84100	84100	84100	-
621DA	P_1	30.9	24.9	21.1	18.3	15.4	13.4	11.8	11.3	9.02	7.64	6.58	-
	M_2	11100	12200	12200	12500	12500	12700	12500	12700	12700	12700	12700	-
	F_{R2}	86100	92900	97800	104000	104000	104000	104000	104000	104000	104000	104000	-
622DB	P_1	-	-	-	-	-	-	-	-	-	-	-	-
	M_2	-	-	-	-	-	-	-	-	-	-	-	-
	F_{R2}	-	-	-	-	-	-	-	-	-	-	-	-
623DA	P_1	52.2	40.1	33.9	27.6	23.4	20.0	17.9	16.9	14.6	12.4	10.7	-
	M_2	18700	19600	19600	18900	18900	18900	18900	18900	20500	20500	20500	-
	F_{R2}	113000	122000	128000	138000	146000	152000	158000	160000	170000	179000	179000	-
624DA	P_1	57.3	53.7	45.4	37.7	31.9	27.3	24.4	23.1	18.4	15.6	13.4	-
	M_2	20500	26200	26200	25800	25800	25800	25800	25800	25800	25800	25800	-
	F_{R2}	126000	135000	142000	153000	161000	168000	175000	177000	190000	200000	208000	-
625DA	P_1	76.7	63.7	53.9	45.3	38.3	34.3	29.3	29.1	24.6	20.8	17.9	-
	M_2	27500	31200	31200	31000	31000	32500	31000	32500	34500	34500	34500	-
	F_{R2}	154000	166000	175000	186000	196000	206000	213000	217000	232000	244000	254000	-
626DA	P_1	87.4	89.4	75.7	67.2	56.9	48.7	43.5	41.2	32.8	27.8	23.9	-
	M_2	31300	43700	43700	46000	46000	46000	46000	46000	46000	46000	46000	-
	F_{R2}	189000	202000	212000	227000	239000	252000	259000	265000	276000	276000	276000	-

Cyclo Gearboxes : Speed Reducer - Foot Mounted

FOOT MOUNTING (TYPE G)

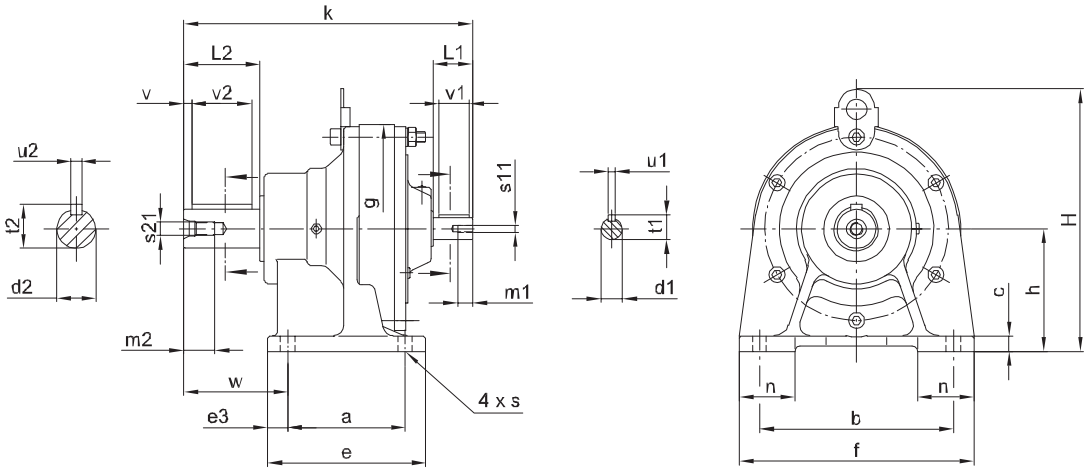

Unit Size	a	b	c	d1 HS	d2 LS	e	e3	f	Øg	h	H	k	L1	L2	m1	m2	n	s	s11	s21	t1	t2	u1	u2	v	v1	v2	w	kg
606	60	120	10	12	14	84	12	144	110	80	-	150	25	30	8	12	48	9	M4	M5	13.5	16	4	5	2.5	22	25	46	2.5
607	60	120	10	12	20	84	12	144	110	80	-	161	25	40	8	15	48	9	M4	M6	13.5	22.5	4	6	4	22	32	57	2.5
608	75	120	13	12	25	99	12	144	134	90	-	193	25	50	8	22	49	9	M4	M10	13.5	28	4	8	3.5	22	40	67	8
609	90	150	12	14	25	135	15	180	150	100	-	217	25	50	10	22	65	11	M5	M10	16	28	5	8	3.5	21	40	75	9
610	90	150	12	14	30	135	15	180	150	100	-	233	25	60	10	22	40	11	M5	M10	16	33	5	8	3.5	21	50	85	13
611	90	150	12	14	35	135	15	180	162	120	-	243	25	70	10	28	45	11	M5	M12	16	38	5	10	7	21	56	95	15
612	115	190	15	19	35	155	20	230	204	120	257	274	35	70	12	28	55	14	M5	M12	21.5	38	6	10	7	27	56	97	24
613	145	290	22	22	50	195	25	330	230	150	300	351	40	100	16	36	65	18	M8	M16	24.5	53.5	6	14	10	34	80	130	43
614	145	290	22	22	50	195	25	330	230	150	300	351	40	100	16	36	65	18	M8	M16	24.5	53.5	6	14	10	34	80	130	44
616	150	370	25	30	60	238	44	410	318	160	367	413	45	90	16	18	75	18	M8	M10	33	64	8	18	0	45	80	139	84
617	275	380	30	35	70	335	30	430	362	200	429	477	55	90	16	24	80	22	M8	M12	38	74.5	10	20	0	50	80	125	125
618	320	420	30	40	80	380	30	470	390	220	467	527	65	110	18	24	85	22	M10	M12	43	85	12	22	0	63	100	145	163
619	380	480	35	45	95	440	30	530	451	250	538	620	70	135	18	34	90	26	M10	M20	48.5	100	14	25	0	70	125	170	240
620	360	440	35	45	100	440	40	530	471	250	530	678	82	165	18	34	100	26	M10	M20	48.5	106	14	28	0	82	165	215	255
621	395	480	40	50	110	475	40	580	507	265	575	708	82	165	18	34	110	26	M10	M20	53.5	116	14	28	0	82	165	210	336
622	420	540	40	55	120	520	50	620	549	280	610	752	82	165	18	34	115	33	M10	M20	59	127	16	32	0	82	165	230	409
623	460	580	45	60	130	560	50	670	591	300	667	839	105	200	18	41	120	33	M10	M24	64	137	18	32	0	105	200	260	503
624	480	630	45	65	140	580	50	720	637	335	729	877	105	200	24	41	128	39	M12	M24	69	148	18	36	0	105	200	263	614
625	520	670	50	80	160	630	55	780	703	375	815	1040	130	240	24	49	140	39	M12	M30	85	169	22	40	0	130	240	320	957
626	590	770	55	80	170	700	55	880	772	400	874	1150	130	300	24	49	160	45	M12	M30	85	179	22	40	0	130	300	390	1190
627	420	1050	60	90	180	1040	100	1160	986	540	1161	1462	150	330	24	52	200	45	M16	M30	95	190	25	45	0	140	330	485	2460

All dimensions are in mm

TECHNICAL NOTES

Keys and keyways acc. to DIN 6885-1.
Tolerances according to DIN ISO 286-2.

Output Shaft Tolerances are k6 up to and including Ø35mm and h6 from Ø50mm and above. Input shafts of Ø22mm and below have a k6 tolerance and from Ø30mm and above have a h6 tolerance.

MOUNTING POSTIONS

Foot mounted and Flange mounted units from size 606-612 are grease lubricated for life and suitable for any mounting position.

Units from size 613 - 625 are oil lubricated for Horizontal and vertical mounting.

For unit sizes 616 and above there is an additional oil circulating pump system required for vertical mounting positions - please consult your local Authorised Distributor.

All speed reducers are also available as flange mounted or face mounted, for additional dimensions please see page 352.

LUBRICANT QUANTITIES

Size	Oil Qty*
613	0.7
614	0.7
616	1.4
617	1.9
618	2.5
619	4.0
620	5.5
621	8.5
622	10.0
623	15.0
624	16.0
625	21.0
626	29.0
627	56.0

* For foot mounted horizontal units. This quantity is an approximate figure only - the actual fill quantity should be determined by means of the oil level gauge.

Cyclo Gearboxes : Speed Reducer - Foot Mounted

FOOT MOUNTING (TYPE DAG / DBG / DCG)

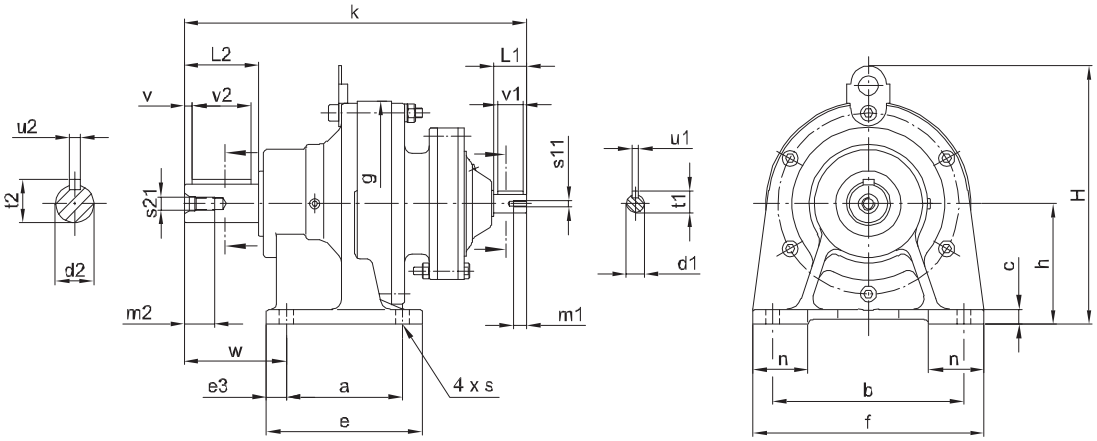

Unit Size	a	b	c	d1 HS	d2 LS	e	e3	f	Øg	h	H	k	L1	L2	m1	m2	n	s	s11	s21	t1	t2	u1	u2	v	v1	v2	w	kg
606DA	60	120	10	12	14	84	12	144	110	80	-	178	25	30	8	12	48	9	M4	M5	13.5	16	4	5	2.5	22	25	46	4
607DA	60	120	10	12	20	84	12	144	110	80	-	194	25	40	8	15	48	9	M4	M6	13.5	22.5	4	6	4	22	32	57	5
609DA	90	150	12	12	25	135	15	180	150	100	-	258	25	50	8	22	65	11	M4	M10	13.5	28	4	8	3.5	22	40	75	12
610DA	90	150	12	12	30	135	15	180	150	100	-	283	25	60	8	22	40	11	M4	M10	13.5	33	4	8	3.5	22	50	85	15
612DA	115	190	15	12	35	155	20	230	204	120	257	308	25	70	8	28	55	14	M4	M12	13.5	38	4	10	3.5	22	56	97	26
612DB	115	190	15	14	35	155	20	230	204	120	257	327	25	70	10	28	55	14	M5	M12	16	38	5	10	7	21	56	97	30
613DB	145	290	22	14	50	195	25	330	230	150	300	394	25	100	10	36	65	18	M5	M16	16	53.5	5	14	10	21	80	130	45
613DC	145	290	22	14	50	195	25	330	230	150	300	400	25	100	10	36	65	18	M5	M16	16	53.5	5	14	10	21	80	130	46
614DC	145	290	22	14	50	195	25	330	230	150	300	400	25	100	10	36	65	18	M5	M16	16	53.5	5	14	10	21	80	130	46
616DB	150	370	25	14	60	238	44	410	300	160	353	440	25	90	10	18	75	18	M5	M10	16	64	5	18	0	21	80	139	87
616DC	150	370	25	19	60	238	44	410	300	160	353	463	35	90	12	18	75	18	M6	M10	21.5	64	6	18	0	27	80	139	94
617DC	275	380	30	19	70	335	30	430	340	200	418	510	35	90	12	24	80	22	M6	M12	21.5	74.5	6	20	0	27	80	125	128
618DB	320	420	30	22	80	380	30	470	370	220	451	577	40	110	16	24	85	22	M8	M12	24.5	85	6	22	0	34	100	145	183
619DA	380	480	35	19	95	440	30	530	430	250	531	629	35	135	12	34	90	26	M8	M20	21.5	100	6	25	0	27	125	170	241
619DB	380	480	35	22	95	440	30	530	430	250	531	653	40	135	16	34	90	26	M8	M20	24.5	100	6	25	0	34	125	170	250
620DB	360	440	35	22	100	440	40	530	448	250	530	705	40	165	16	34	100	26	M8	M20	24.5	106	6	28	0	34	165	215	273
621DA	395	480	40	22	110	475	40	580	485	265	575	731	40	165	16	34	110	26	M8	M20	24.5	116	6	28	0	34	165	210	354
622DA	420	540	40	22	120	520	50	620	526	280	610	773	40	165	16	34	115	33	M8	M20	24.5	127	6	32	0	34	165	230	429
622DB	420	540	40	35	120	520	50	620	526	280	610	860	55	165	16	34	115	33	M8	M20	38	127	10	32	0	50	165	230	476
623DA	460	580	45	30	130	560	50	670	562	300	667	883	45	200	16	41	120	33	M8	M24	33	137	8	32	0	45	200	260	548
624DA	480	630	45	30	140	580	50	720	614	335	729	921	45	200	16	41	128	39	M8	M24	33	148	8	36	0	45	200	263	656
625DA	520	670	50	35	160	630	55	780	670	375	815	1081	55	240	16	49	140	39	M8	M30	38	169	10	40	0	50	240	320	1010
626DA	590	770	55	45	170	700	55	880	736	400	874	1243	70	300	18	49	160	45	M10	M30	48.5	179	14	40	0	70	300	390	1340
627DA	420	1050	60	45	180	1040	100	1160	950	540	1161	1505	70	330	18	52	200	45	M10	M30	48.5	190	14	45	0	70	330	485	2480

All dimensions are in mm

TECHNICAL NOTES

Keys and keyways acc. to DIN 6885-1.
Tolerances according to DIN ISO 286-2.

Output Shaft Tolerances are k6 up to and including Ø35mm and h6 from Ø50mm and above. Input shafts of Ø22mm and below have a k6 tolerance and from Ø30mm and above have a h6 tolerance.

MOUNTING POSTIONS

Size 606DA - 616DB are Grease lubricated for all mounting positions.

Size 616DC - 627DA are oil lubricated for Horizontal mounting and grease lubricated for vertical mounting positions.

All speed reducers are also available as flange mounted or face mounted, for additional dimensions see page 352.

LUBRICANT QUANTITIES

Size	Oil Qty*
616DC	1.5
617DC	2.4
618DB	3.5
619DA	5.8
619DB	6.0
620DB	6.0
621DA	10.0
622DA	11.0
622DB	11.0
623DA	17.0
624DA	18.0
625DA	23.0
626DA	32.0
627DA	70.0

* For foot mounted horizontal units. This quantity is an approximate figure only - the actual fill quantity should be determined by means of the oil level gauge.

Cyclo Gearboxes : Reducer - Dimensions Motor-ready (IEC) Foot Mounted

FOOT MOUNTED (TYPE DAD / DBD)

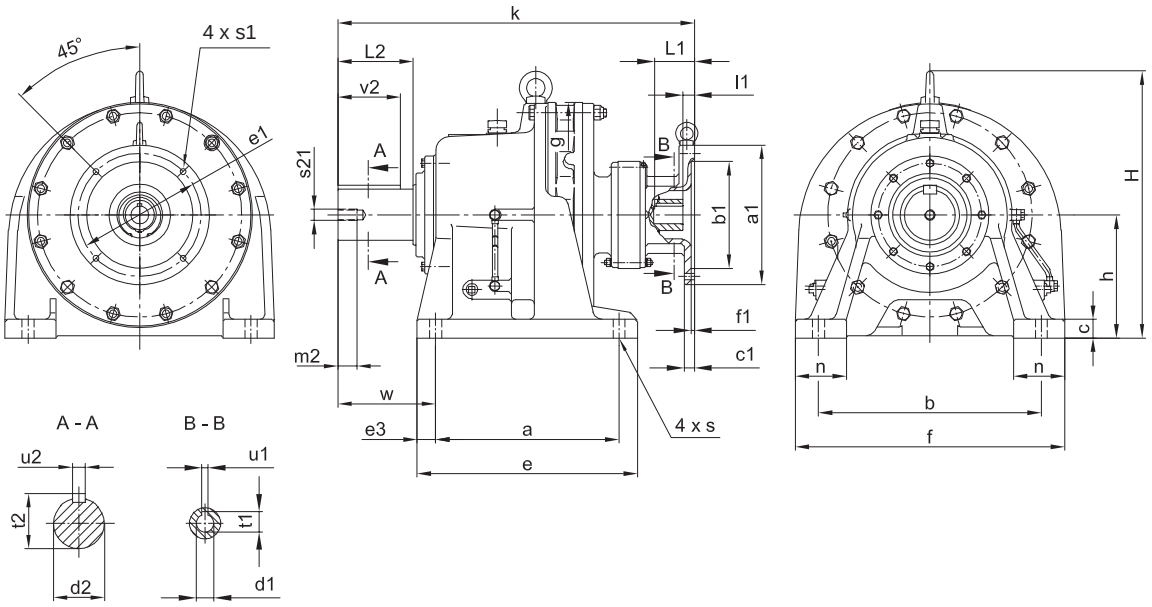

Unit Size	a	b	c	Ø d2	e	e3	f	Ø g	h	H	L2	m2	n	Ø s	s21	t2	u2	v2	w
620DB	360	440	35	100 h6	440	40	530	448	250	530	165	34	100	26	M20	106	28	165	215
621DA	395	480	40	110 h6	475	40	580	485	265	575	165	34	110	26	M20	116	28	165	210
622DA	420	540	40	120 h6	520	50	620	526	280	610	165	34	115	33	M20	127	32	165	230
623DA	460	580	45	130 h6	560	50	670	562	300	667	200	41	120	33	M24	137	32	200	260
624DA	480	630	45	140 h6	580	50	720	614	335	729	200	41	128	39	M24	148	36	200	263

All dimensions are in mm.

Unit Size	Frame	Ø a1	Ø b1	c1	Ø e1	f1	k	Ø s1	Ø d1	l1	L1	u1	t1	kg
620DB	90	200	130 H8	11	165	4.5	705	11	24 F7	14	50	8 Js9	27.3	276
	100/112	250	180 H8	13	215	5	715	14	28 F7	18	60	8 Js9	31.3	278
	132	300	230 H8	17	265	5	741	14	38 F7	23	80	10 Js9	41.3	283
621DA	90	200	130 H8	11	165	4.5	732	11	24 F7	14	50	8 Js9	27.3	357
	100/112	250	180 H8	13	215	5	742	14	28 F7	18	60	8 Js9	31.3	359
	132	300	230 H8	17	265	5	768	14	38 F7	23	80	10 Js9	41.3	364
622DA	90	200	130 H8	11	165	4.5	773	11	24 F7	14	50	8 Js9	27.3	432
	100/112	250	180 H8	13	215	5	783	14	28 F7	18	60	8 Js9	31.3	434
	132	300	230 H8	17	265	5	809	14	38 F7	23	80	10 Js9	41.3	439
623DA	100/112	250	180 H8	14	215	5	864	14	28 F7	18	60	8 Js9	31.3	552
	132	300	230 H8	16	265	5	876	14	38 F7	23	80	10 Js9	41.3	557
	160	350	250 H8	16	300	6	922	18	42 F7	47	110	12 Js9	45.3	562
624DA	100/112	250	180 H8	14	215	5	902	14	28 F7	18	60	8 Js9	31.3	660
	132	300	230 H8	16	265	5	924	14	38 F7	23	80	10 Js9	41.3	665
	160	350	250 H8	16	300	6	960	18	42 F7	47	110	12 Js9	45.3	670

For two stage units larger than this size, use speed reducerss (page 367) and IEC motor adaptor and coupling (page 376)

Cyclo Gearboxes : IEC Adapter Housing

IEC MOTOR ADAPTER

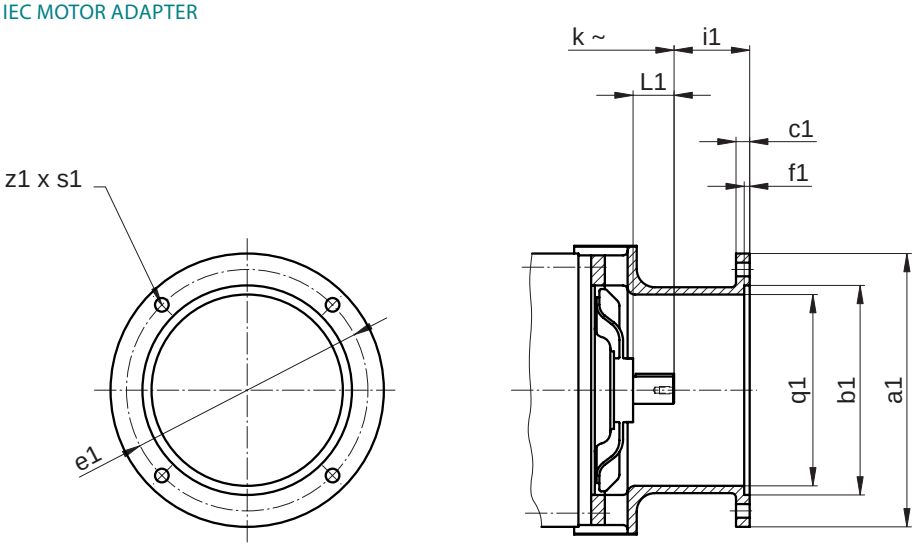

Unit Size	Frame	a1	b1	c1	e1	f1	i1	L1	s1	z1	q1	Input Coupling	Motor Shaft	Gearbox Shaft	Weight kg*
617	100/112	250	180h8	15	215	6	63	55	14	4	150	HRC90	28	35	20.8
	132	300	230 H8	15	265	6	83	55	14	4	190	HRC110	38	35	25.0
	160	350	250 H8	20	300	7	113	55	18	4	200	HRC110	42	35	33.0
	180	350	250 H8	20	300	7	113	55	18	4	200	HRC130	48	35	33.5
618	100/112	250	180h8	15	215	6	63	65	14	4	160	HRC110	28	40	28.0
	132	300	230 H8	15	265	7	83	65	15	4	190	HRC130	38	40	30.5
	160	350	250 H8	20	300	7	113	65	18	4	200	HRC130	42	40	33.5
	180	350	250 H8	20	300	7	113	65	18	4	200	HRC130	48	40	35.5
	200	400	300 H8	19	350	7	114	65	18	4	220	HRC130	55	40	40.5
	225	450	350 H8	20	400	7	144	70	18	8	270	HRC150	60	40	50.2
619	132	300	230 H8	16	265	6	83	70	15	4	190	HRC110	38	45	25.0
	160	350	250 H8	20	300	7	113	70	18	4	190	HRC130	42	45	38.5
	180	350	250 H8	20	300	7	113	70	18	4	190	HRC130	48	45	38.5
	200	400	300 H8	20	350	7	114	70	18	4	220	HRC130	55	45	49.5
	225	450	350 H8	20	400	7	144	70	18	8	270	HRC150	60	45	50.2
620	160	350	250 H8	20	300	7	113	82	18	4	200	HRC130	42	45	50.5
	180	350	250 H8	20	300	7	113	82	18	4	200	HRC130	48	45	50.5
	200	400	300 H8	20	350	7	114	82	18	4	220	HRC130	55	45	52.5
	225#	450	350 H8	19	400	7	144	82	18	8	270	HRC150	60	45	69.2
621	160	350	250 H8	20	300	7	113	82	18	4	200	HRC130	42	50	57.5
	180	350	250 H8	20	300	7	113	82	18	4	200	HRC130	48	50	57.5
	200	400	300 H8	23	350	7	114	82	18	4	210	HRC130	55	50	65.5
	225	450	350 H8	23	400	7	144	82	18	8	270	HRC150	60	50	72.2
	250#	550	450 H8	22	500	7	144	82	18	8	290	HRC150	65	50	84.2
622	180	350	250 H8	18	300	7	114	82	18	4	200	HRC130	48	55	72.5
	200	400	300 H8	18	350	7	114	82	18	4	210	HRC130	55	55	75.5
	225	450	350 H8	22	400	7	144	82	18	8	270	HRC150	60	55	87.2
	250#	550	450 H8	22	500	7	144	82	18	8	290	HRC150	65	55	101.2
623/624	200	400	300 H8	20	350	7	114	105	18	4	260	HRC150	55	60/65	84.2/102.2
	225	450	350 H8	22	400	7	144	105	18	8	270	HRC150	60	60/65	92.2/108.2
	250	550	450 H8	22	500	7	144	105	18	8	300	HRC150	65	60/65	103.2/132.2
	280	550	450 H8	22	500	7	144	105	18	8	300	HRC180	75	60/65	112.6/141.6
625	225	450	350 H8	22	400	7	144	130	19	8	280	HRC230	60	80	143
	250	550	450 H8	22	500	7	144	130	18	8	350	HRC230	65	80	157
	280	550	450 H8	22	500	7	144	130	18	8	350	HRC230	75	80	157
626	250	550	450 H8	22	500	7	144	130	19	8	350	HRC230	65	80	181
	280	550	450 H8	22	500	7	144	130	19	8	350	HRC230	75	80	181

*The kg shown is an additional weight of couplings and adaptor to be added to the speed reducer weight on page 374
Larger frames are available on request - please contact your local authorised distributor
~ For k dimensions refer to page 374.

Cyclo Gearboxes : Minimum Motor Power Requirements

MINIMUM MOTOR POWER REQUIREMENTS

Two stage units require a minimum input power in order to provide a safe start under difficult conditions.

The gearheads are limited by their rated output torque.

Note: Operation with full motor power is not possible and we advise some method of torque limiting be installed.

Unit Size	841 29 x 29	1003 59 x 17	1247 43 x 29	1479 87 x 17	1849	2065	2537	3045	3481	4437	5133	6177	7569
606DA	0.12	-	0.12	-	0.12	-	-	-	-	-	-	-	-
607DA	0.12	0.12	0.12	-	0.12	0.12	0.12	-	-	-	-	-	-
609DA	0.12	0.12	0.12	0.12	0.12	0.12	0.12	0.12	0.12	0.12	0.12	-	-
610DA	0.12	0.12	0.12	0.12	0.12	0.12	0.12	0.12	0.12	0.12	0.12	-	-
612DA	0.18	0.18	0.18	0.18	0.18	0.18	0.18	0.18	0.18	0.18	0.18	0.12	0.12
612DB	0.18	0.18	0.18	0.18	0.18	0.18	0.18	0.18	0.18	0.18	0.18	0.18	0.18
613DA	0.18	0.18	0.18	0.18	0.18	0.18	0.18	0.18	0.18	0.18	0.18	0.18	0.18
613DB	0.37	0.37	0.18	0.18	0.18	0.18	0.18	0.18	0.18	0.18	0.18	0.18	0.18
613DC	0.37	0.37	0.25	0.25	0.18	0.18	0.18	0.18	0.18	0.18	0.18	0.18	0.18
614DA	0.37	0.37	0.37	0.18	0.18	0.18	0.18	0.18	0.18	0.18	0.18	0.18	0.18
614DB	0.37	0.37	0.37	0.18	0.18	0.18	0.18	0.18	0.18	0.18	0.18	0.18	0.18
614DC	0.37	0.37	0.37	0.25	0.18	0.18	0.18	0.18	0.18	0.18	0.18	0.18	0.18
616DA	0.37	0.37	0.37	0.25	0.18	0.18	0.18	0.18	0.18	0.18	0.75	0.18	0.18
616DB	0.75	0.75	0.37	0.37	0.37	0.18	0.18	0.18	0.18	0.18	0.75	0.18	0.18
616DC	0.75	0.75	0.37	0.25	0.18	0.37	0.18	0.18	0.18	0.18	0.75	0.18	0.18
617DA	0.75	0.75	0.75	0.75	0.75	0.75	0.75	0.75	0.75	0.75	0.75	0.75	0.75
617DB	0.75	0.75	0.75	0.75	0.75	0.75	0.75	0.75	0.75	0.75	0.75	0.75	0.75
617DC	1.1	1.1	1.1	1.1	1.1	1.1	1.1	1.1	1.1	1.1	0.75	0.75	0.75
618DA	1.5	1.5	1.5	1.5	1.5	1.5	1.5	1.5	1.5	1.5	1.5	1.5	1.5
618DB	1.5	1.5	1.5	1.5	1.5	1.5	1.5	1.5	1.5	1.5	1.5	1.5	1.5
619DA	1.5	1.5	1.5	1.5	1.5	0.75	0.75	0.75	0.75	0.75	0.75	0.75	0.75
619DB	1.5	1.5	1.5	1.5	1.5	1.1	1.1	1.1	1.1	1.1	1.1	0.75	0.75
620DA	2.2	2.2	1.5	1.5	1.5	1.5	1.5	1.5	1.5	1.5	1.5	1.1	1.1
620DB	2.2	2.2	1.5	1.5	1.5	1.5	1.5	1.5	1.5	1.5	1.5	1.1	1.1
621DA	4.0	4.0	2.2	2.2	1.5	1.5	1.5	1.5	1.5	1.5	1.5	1.5	1.5
621DB	4.0	4.0	2.2	2.2	1.5	1.5	1.5	1.5	1.5	1.5	1.5	1.5	1.5
622DA	4.0	4.0	4.0	4.0	2.2	1.5	1.5	1.5	1.5	1.5	1.5	1.5	1.5
622DB	5.5	4.0	4.0	2.2	2.2	2.2	2.2	1.5	1.5	1.5	1.5	1.5	1.5
623DA	5.5	4.0	4.0	2.2	2.2	2.2	2.2	2.2	2.2	2.2	2.2	2.2	2.2
623DB	5.5	4.0	4.0	3.0	2.2	2.2	2.2	2.2	2.2	2.2	2.2	2.2	2.2
624DA	5.5	5.5	5.5	4.0	4.0	4.0	4.0	2.2	4.0	2.2	4.0	2.2	2.2
624DB	5.5	5.5	5.5	4.0	4.0	4.0	4.0	2.2	4.0	2.2	4.0	2.2	2.2
625DA	5.5.	5.5.	5.5.	5.5	5.5	5.5	5.5	4.0	5.5	4.0	5.5	4.0	4.0
625DB	7.5	7.5	7.5	5.5	5.5	5.5	5.5	4.0	5.5	5.5	5.5	4.0	4.0
626DA	11.0	11.0	7.5	7.5	5.5	5.5	5.5	5.5	5.5	5.5	5.5	5.5	5.5
627DA	15.0	15.0	11.0	11.0	7.5	7.5	7.5	7.5	7.5	7.5	7.5	7.5	7.5

Cyclo Gearboxes : Minimum Input Power & Breakaway Torque

MINIMUM INPUT POWER REQUIREMENTS

A minimum input power is necessary to accelerate the reducer to its rated input speed under its worst operating conditions within the thermal available time.

The values shown give the necessary power per 100rpm at the input shaft.

The output torque during operation may not exceed the maximum allowable torque.above. Column 3 gives the approximate output shaft speed for the selected speed and ratio combination.

Unit Size	Combination	Input Power (kW/100rpm)
606DA	606+606	0.0067
607DA	607+606	0.0067
609DA	609+607	0.0067
610DA	610+607	0.0067
612DA	612+607	0.0067
612DB	612+609	0.0067
613DA	613+607	0.0133
613DB	613+609	0.0133
613DC	613+610	0.0133
614DA	614+607	0.0133
614DB	614+609	0.0133
614DC	614+610	0.0133
616DA	616+609	0.0133
616DB	616+610	0.0133
616DC	616+612	0.0267
617DA	617+609	0.0267
617DB	617+610	0.0267
617DC	617+612	0.0500

Unit Size	Combination	Input Power (kW/100rpm)
618DA	618+610	0.0500
618DB	618+613	0.1000
619DA	619+612	0.1000
619DB	619+613	0.1000
620DA	620+612	0.1000
620DB	620+613	0.1000
621DA	621+613	0.1000
621DB	621+616	0.1000
622DA	622+613	0.1000
622DB	622+617	0.2467
623DA	623+616	0.1467
623DB	623+618	0.3067
624DA	624+616	0.2467
624DB	624+618	0.3067
625DA	625+617	0.2467
625DB	625+619	0.3667
626DA	626+619	0.3667
626DA	626+619	0.3667

BREAKAWAY TORQUE

The Breakaway Torques shown below are obtained with standard lubrication and do not include any dynamic torques or external loads. The ambient temperature is taken as 20°C.

These values are average values and a deviation of ±50% has to be considered.

The BOLD figure is for speed increasers (driving the output shaft) and the other figure is for standard speed reducers (driving the input shaft).

To determine breakaway torque (TB) for units with more than one stage, use the following formulae:

Slow speed $T_B = T_{B1} + T_{B2} / i_1$

High speed $T_B = T_{B1} + T_{B2} \times i_2$

T_{B1} = 1st stage T_B T_{B2} = 2nd stage T_B i_1 = Ratio 1st stage
i_2 = Ratio 2nd stage

Unit Size	Breakaway Torque Required at Ratio (Nm)															
	6	8	11	13	15	17	21	25	29	35	43	51	59	71	87	119
606	0.53	0.70	0.95	1.10	1.30	1.50	1.80	2.20	2.50	3.00	3.70	-	-	-	-	-
	0.088	0.088	0.087	0.087	0.087	0.087	0.087	0.087	0.087	0.087	0.087	-	-	-	-	-
607	0.53	0.70	0.97	1.10	1.30	1.50	1.80	2.20	2.50	3.10	3.80	4.50	5.20	-	-	-
	0.088	0.088	0.088	0.088	0.088	0.088	0.088	0.088	0.088	0.088	0.088	0.088	0.088	-	-	-
608	1.30	1.40	1.60	1.60	1.80	2.10	2.60	2.60	3.00	3.60	4.40	5.30	6.10	7.30	9.00	-
	0.220	0.180	0.150	0.120	0.120	0.120	0.120	0.100	0.100	0.100	0.100	0.100	0.100	0.100	0.100	-
609	1.90	2.50	2.70	2.90	3.40	3.80	4.70	6.10	7.10	11.0	12.0	11.0	13.0	16.0	22.0	29.2
	0.310	0.310	0.250	0.230	0.230	0.230	0.230	0.230	0.250	0.230	0.200	0.150	0.150	0.130	0.130	0.120
610	2.20	2.70	2.70	3.20	3.70	4.20	5.20	8.30	9.60	12.0	14.0	13.0	15.0	18.0	25.0	34.0
	0.360	0.330	0.250	0.250	0.250	0.250	0.250	0.260	0.260	0.250	0.230	0.170	0.170	0.140	0.140	0.140
611	2.80	3.30	4.00	4.20	4.60	4.50	5.60	8.60	10.0	12.0	15.0	17.0	17.0	18.0	26.0	-
	0.460	0.410	0.360	0.330	0.300	0.260	0.260	0.270	0.270	0.250	0.250	0.230	0.200	0.150	0.150	-
612	3.10	3.50	4.10	4.50	4.90	5.30	6.20	7.40	11.0	13.0	17.0	23.0	28.0	34.0	42.0	-
	0.510	0.440	0.370	0.340	0.330	0.310	0.290	0.290	0.290	0.270	0.270	0.290	0.310	0.270	0.270	-
613	1.90	2.40	3.20	3.60	4.00	4.50	6.20	7.40	8.50	9.30	11.0	10.0	11.0	12.0	19.0	-
	0.310	0.290	0.290	0.270	0.260	0.260	0.290	0.290	0.290	0.260	0.250	0.190	0.190	0.170	0.220	-
614	2.10	2.60	3.60	4.00	4.40	5.00	6.80	8.10	9.40	10.0	11.0	11.0	13.0	14.0	17.0	-
	0.340	0.320	0.320	0.300	0.290	0.290	0.320	0.320	0.320	0.290	0.260	0.220	0.220	0.200	0.200	-
616	5.40	6.60	8.40	9.40	10.0	12.0	13.9	16.6	20.0	25.0	32.0	21.0	25.0	32.0	36.0	-
	0.700	0.640	0.590	0.560	0.530	0.530	0.510	0.510	0.530	0.550	0.570	0.320	0.320	0.340	0.340	-
617	10.0	12.0	16.0	17.0	20.0	22.0	27.0	31.0	36.0	45.0	55.0	68.0	78.0	60.0	74.0	-
	1.080	0.980	0.900	0.830	0.830	0.800	0.800	0.780	0.780	0.810	0.810	0.840	0.840	0.540	0.540	-
618	-	-	16.0	18.0	21.0	24.0	30.0	35.0	42.0	51.0	59.0	70.0	81.0	65.0	75.0	-
	-	-	0.930	0.910	0.910	0.910	0.910	0.910	0.930	0.930	0.880	0.880	0.880	0.590	0.560	-
619	-	-	21.0	23.0	25.0	28.0	35.0	41.0	48.0	58.0	67.0	80.0	73.0	82.0	88.0	-
	-	-	1.100	1.000	1.000	1.000	1.000	1.000	0.980	0.980	0.930	0.930	0.740	0.690	0.590	-
620	-	-	42.0	-	32.0	-	36.0	-	43.0	-	51.0	-	75.0	-	61.0	-
	-	-	0.980	-	0.980	-	0.980	-	1.000	-	0.980	-	0.980	-	0.590	-
621	-	-	48.0	-	40.0	-	43.0	-	51.0	-	61.0	-	90.0	-	78.0	-
	-	-	1.200	-	1.200	-	1.200	-	1.200	-	1.200	-	1.200	-	0.690	-
622	-	-	54.0	-	45.0	-	46.0	-	60.0	-	61.0	-	105	-	89.0	-
	-	-	1.400	-	1.400	-	1.400	-	1.400	-	1.200	-	1.400	-	0.780	-
623	-	-	33.0	-	45.0	-	59.0	-	65.0	-	91.0	-	135	-	180	-
	-	-	1.800	-	1.800	-	1.800	-	1.800	-	1.800	-	1.800	-	1.800	-
624	-	-	36.0	-	50.0	-	66.0	-	80.0	-	101	-	150	-	222	-
	-	-	2.000	-	2.000	-	2.000	-	2.000	-	2.000	-	2.000	-	2.000	-
625	-	-	54.0	-	74.0	-	99.0	-	119	-	152	-	226	-	333	-
	-	-	2.900	-	2.900	-	2.900	-	2.900	-	2.900	-	2.900	-	2.900	-
626	-	-	82.0	-	110	-	132	-	168	-	202	-	301	-	444	-
	-	-	3.900	-	3.900	-	3.900	-	3.900	-	3.900	-	2.900	-	2.900	-
627	-	-	-	-	-	-	-	-	-	-	329	-	451	-	-	-
	-	-	-	-	-	-	-	-	-	-	5.900	-	5.900	-	-	-

Cyclo Gearboxes : Output Torque Ratings - 1450rpm

SINGLE STAGE UNITS

Ratio Code	Exact Ratio	606	607	608	609	610	611	612	613	614	616
01 *	3.00	-	-	-	-	67.0	-	110	199	267	413
02 *	5.00	-	-	-	-	94.0	-	183	332	445	689
03	6.00	10.7	15.3	29.2	56.9	119	147	261	424	569	903
04	8.00	14.3	20.4	38.9	75.8	159	196	348	566	758	1200
05	11.00	19.7	28.0	53.5	104	219	270	407	778	1040	1660
06	13.00	23.3	33.1	63.3	123	259	317	482	832	1230	1840
07	15.00	26.9	38.2	73.0	142	298	366	556	842	1360	2100
08	17.00	30.0	43.3	82.7	161	261	415	602	882	1280	2000
09	21.00	30.0	53.5	72.3	198	300	409	630	883	1250	2100
10	25.00	25.9	46.0	74.3	136	262	348	619	900	1240	2100
11	29.00	30.0	52.0	84.8	142	288	403	630	886	1370	2070
12	35.00	30.0	59.6	90.2	166	262	396	630	900	1370	2100
13	43.00	30.0	60.0	79.1	162	292	408	630	900	1260	2100
14	51.00	-	45.7	76.9	130	248	355	630	813	1180	2100
15	59.00	-	50.1	86.2	124	251	373	598	900	1170	2100
16	71.00	-	-	89.7	124	225	337	506	900	1160	2100
17	87.00	-	-	66.0	143	274	412	559	900	1170	2050
18	119.00	-	-	-	108	213	-	-	-	-	-

*Special order items - please consult your local authorised distributor

TWO STAGE UNITS

Ratio Code	Exact Ratio	606DA	607DA	609DA	610DA	612DA	612DB	613DB	613DC	614DC	616DB	616DC	617DC	618DB	619DA	619DB
19	102.00	30	60	181	265	265	630	940	940	1370	1760	2100	3150	4900	4520	7350
20	104.00	30	60	181	265	265	630	940	940	1370	1760	2100	3150	4900	4520	7350
21	121.00	30	51	160	308	308	622	940	940	1290	1760	2100	3150	4810	4480	7580
22	143.00	30	60	183	300	364	630	940	940	1370	1760	2100	3150	4900	5300	7630
23	165.00	30	60	200	300	420	630	940	940	1360	1760	2100	3150	4920	6110	7910
24	174.00	30	60	200	300	420	630	940	940	1360	1760	2100	3150	4920	6110	7910
25	187.00	30	60	200	300	420	630	940	940	1360	1760	2100	3150	4920	6110	7910
26	195.00	30	60	200	300	496	630	940	940	1360	1760	2100	3150	4920	6500	7910
27	210.00	30	60	200	300	496	630	940	940	1360	1760	2100	3150	4920	6500	7910
28	231.00	30	60	200	300	588	630	940	940	1340	1760	2100	3150	5000	7960	7960
29	258.00	30	60	200	300	588	630	940	940	1340	1760	2100	3150	5000	7960	7960
30	273.00	30	60	200	300	630	630	940	940	1340	1760	2100	3150	5000	7960	7960
31	289.00	30	60	200	300	630	630	940	940	1340	1760	2100	3150	5000	7960	7960
32	319.00	30	60	200	300	630	630	940	940	1370	1760	2100	3150	5000	7960	7960
33	354.00	-	-	200	300	630	630	940	940	1370	1760	2100	3150	5000	7960	7960
34	357.00	30	60	200	300	630	630	940	940	1340	1760	2100	3150	5000	7960	7960
35	377.00	30	60	200	300	630	630	940	940	1370	1760	2100	3150	5000	7960	7960
36	385.00	30	60	200	300	630	630	940	940	1370	1760	2100	3150	5000	7960	7960
37	425.00	30	60	195	300	630	630	900	900	1370	1760	2100	3150	5000	7960	7960
38	435.00	30	60	195	300	630	630	940	940	1370	1760	2100	3150	5000	7960	7960
39	473.00	30	60	200	300	630	630	940	940	1370	1740	2100	3150	5000	7960	7960
40	493.00	30	60	200	300	630	630	940	940	1370	1740	2100	3150	5000	7960	7960
41	522.00	30	60	200	300	630	630	940	940	1370	1740	2100	3150	5000	7960	7960
42	525.00	30	60	195	300	630	630	940	940	1370	1760	2100	3150	5000	7960	7960
43	559.00	30	60	200	300	630	630	940	940	1370	1740	2100	3150	5000	7960	7960
44	595.00	30	60	200	300	630	630	940	940	1370	1760	2100	3150	5000	7960	7960
45	649.00	-	57	146	296	630	630	1050	1050	1370	1760	2100	3150	5000	7960	7960
46	731.00	30	60	200	300	630	630	940	940	1370	1740	2100	3150	5000	7960	7960
47	841.00	30	60	200	300	630	630	940	940	1370	1740	2100	3150	5000	7960	7960
48	957.00	-	-	200	300	630	630	940	940	1370	1740	2100	3150	5000	7960	7960
49	1,003.00	-	60	200	300	630	630	940	940	1370	1740	2100	3150	5000	7960	7960
50	1,131.00	-	-	200	300	630	630	940	940	1370	1740	2100	3150	5000	7960	7960
51	1,225.00	30	60	200	300	630	630	940	940	1370	1740	2100	3150	5000	7960	7960
52	1,247.00	30	60	200	300	630	630	940	940	1370	1740	2100	3150	5000	7960	7960
53	1,479.00	-	-	200	300	630	630	940	940	1370	1740	2100	3150	5000	7960	7960
54	1,505.00	30	60	200	300	630	630	940	940	1370	1740	2100	3150	5000	7960	7960
55	1,711.00	-	60	200	300	630	630	940	940	1370	1740	2100	3150	5000	7960	7960
56	1,849.00	30	60	200	300	630	630	940	940	1370	1740	2100	3150	5000	7960	7960
57	2,065.00	-	60	200	300	630	630	940	940	1370	1740	2100	3150	5000	7960	7960
58	2,193.00	-	60	200	300	630	630	940	940	1370	1740	2100	3150	5000	7960	7960
59	2,537.00	-	60	200	300	630	630	940	940	1370	1740	2100	3150	5000	7960	7960
60	3,045.00	-	-	200	300	630	630	940	940	1370	1740	2100	3150	5000	7960	7960
61	3,481.00	-	-	200	300	630	630	940	940	1370	1740	2100	3150	5000	7960	7960
62	3,741.00	-	-	200	300	630	630	940	940	1370	1740	2100	3150	5000	7960	7960
63	4,437.00	-	-	200	300	630	630	940	940	1370	1740	2100	3150	5000	7960	7960
64	5,133.00	-	-	200	300	630	630	940	940	1370	1740	2100	3150	5000	7960	7960
65	6,177.00	-	-	-	-	630	630	940	940	1370	1740	2100	3150	5000	7960	7960
66	7,569.00	-	-	-	-	630	630	940	940	1370	1740	2100	3150	5000	7960	7960

Cyclo Gearboxes : Output Torque Ratings - 1450rpm

THREE STAGE UNITS

Ratio Code	Exact Ratio	606TA	607TA	609TA	610TA	612TA 612TB	613TA 613TB	614TA 614TB	616TA 616TD	617TA 617TD	618TA 618TC	619TA	619TB
67	9,251.00	30.0	60.0	200	300	630	940	1370	2100	3150	5000	-	7960
68	10,933.00	30.0	60.0	200	300	630	940	1370	2100	3150	5000	-	7960
69	13,629.00	-	57.4	146	300	630	1050	1370	2100	3150	5000	-	7960
70	16,211.00	30.0	60.0	200	296	630	940	1370	2100	3150	5000	-	7960
71	20,339.00	30.0	60.0	200	300	630	940	1370	2100	3150	5000	7960	-
72	24,037.00	30.0	60.0	200	300	630	940	1370	2100	3150	5000	7960	-
73	27,907.00	-	57.4	146	296	630	1050	1370	2100	3150	5000	7960	-
74	31,433.00	30.0	60.0	200	300	630	940	1370	2100	3150	5000	7960	-
75	38,291.00	-	-	146	296	630	1050	1370	2100	3150	5000	7960	-
76	43,129.00	-	57.4	146	296	630	1050	1370	2100	3150	5000	7960	-
77	53,621.00	30.0	60.0	200	300	630	940	1370	2100	3150	5000	7960	-
78	59,177.00	-	-	146	296	630	1050	1370	2100	3150	5000	7960	-
79	73,573.00	-	57.4	146	296	630	1050	1370	2100	3150	5000	7960	-
80	79,507.00	30.0	60.0	200	300	630	940	1370	2100	3150	5000	7960	-
81	109,091.00	-	57.4	146	296	630	1050	1370	2100	3150	5000	7960	-
82	149,683.00	-	-	146	296	630	1050	1370	2100	3150	5000	7960	-
83	446,571.00	-	-	-	-	630	979	1250	2050	3150	5000	7960	-
84	658,503.00	-	-	-	-	-	-	-	2050	3150	5000	-	7960

Cyclo Gearboxes : Ordering instructions

These codes should be included on all enquiries, correspondences and orders.

First Three Digits: Unit Size

Select from the tables on pages 344-348 for motorised units.

Single stage units use just the size code e.g. 606

Multistage units use the size with letters e.g. 606DA/606TA

Fourth Digit: Mounting Type

X: Foot Mounted - standard IEC motor
Y: Flange Mounted - standard IEC motor
Z: Face Mounted - standard IEC motor
A: Foot Mounted - alternative integrated motor
B: Flange Mounted - alternative integrated motor
C: Face Mounted - alternative integrated motor
D: Foot Mounted Motor ready to suit IEC motor
E: Flange Mounted Motorready to suit IEC motor
F: Face Mounted Motor ready to suit IEC motor
G: Foot Mounted - Speed Reducer
H: Flange Mounted - Speed Reducer
J: Face Mounted - Speed Reducer

Fifth and Sixth Digit: Ratio Code.

The two digit code can be obtained from the Ratio Codes table opposite.

Seventh and Eighth Digits: Input Code

Motorised units use a unique motor code obtained from the selection tables.

Speed reducers are given a code of 00

Motor ready units use the frame size code of the motor input required taken from the table below.

Code	Frame	Flange	ØShaft	Flange
63C	63	B14	11	90
63D	63	B5	11	140
71C	71	B14	14	105
71D	71	B5	14	160
80C	80	B14	19	120
80D	80	B5	19	200
90C	90	B14	24	140
90D	90	B5	24	200
10C	100/112	B14	28	160
10D	100/112	B5	28	250
13D	132	B5	38	300
16D	160	B5	42	350

Ninth Digit: Type of motor variant

Additional motor features as below:

Code	Motor Type
A	Fitted with A/Cheaters (specify voltage 110/230v)
B	Fitted with motorised backstop module (specify rotation)
N	Fitted with brake & Hand Release (specify voltage)
P	Fitted with premium efficiency EFF1 motor
S	Fitted with Single Phase motor
T	Fitted with Thermistors
Q	Special - refer to serial number records
Z	Fitted with Force Vent Unit

MOTOR CODES

2 POLE MOTORS

Code	kW	Speed	Frame	kg
47	0.12	2820	63	4.0
01	0.18	2730	63	4.0
03	0.25	2780	63	4.0
09	0.37	2815	71	7.5
10	0.55	2800	71	8.5
19	0.75	2800	80	11.5
20	1.1	2800	80	12.0
26	1.5	2870	90	17.0
29	2.2	2840	90	18.5
39	3.0	2890	100	26.0
44	4.0	2900	112	33.0
52	5.5	2935	132	56.0
58	7.5	2920	132	60.5
63	11.0	2910	160	106.0
64	15.0	2930	160	116.0
69	18.5	2930	160	129.0
77	22.0	2950	180	180.0

4 POLE MOTORS

Code	kW	Speed	Frame	kg
48	0.12	1370	63	4.0
02	0.18	1400	63	5.0
06	0.25	1400	71	8.5
08	0.37	1390	71	9.0
16	0.55	1440	80	11.5
18	0.75	1415	80	12.0
24	1.1	1440	90	16.0
28	1.5	1410	90	19.0
36	2.2	1410	100	25.5
38	3.0	1410	100	28.0
46	4.0	1420	112	32.0
54	5.5	1470	132	57.0
56	7.5	1470	132	62.5
66	11.0	1470	160	105.0
68	15.0	1460	160	121.0
76	18.5	1475	180	160.0
78	22.0	1470	180	183.0
88	30.0	1475	200	233.0
94	37.0	1480	225	350.0
95	45.0	1475	225	382.0
96	55.0	1475	250	460.0
98	75.0	1485	280	735.0
99	90.0	1485	280	802.0

2 POLE MOTORS

Code	kW	Speed	Frame	kg
13	0.12	915	63	5.0
05	0.18	890	71	8.5
07	0.25	890	71	9.5
12	0.37	925	80	10.5
17	0.55	920	80	12.5
23	0.75	910	90	15.0
27	1.1	920	90	19.0
37	1.5	940	100	25.5
45	2.2	930	112	28.0
53	3.0	950	132	57.5
55	4.0	940	132	58.0
57	5.5	945	132	66.0
65	7.5	965	160	121.0
67	11.0	970	160	134.0
74	15.0	965	180	181.0
75	18.5	975	200	219.0
84	22.0	975	200	228.0
91	30.0	985	225	366.0
92	37.0	980	250	440.0
93	45.0	985	280	610.0
97	55.0	985	280	655.0

RATIO CODES

SINGLE STAGE

Code	Exact Ratio	1
01 *	3.0	P
02 *	5.0	P
03	6.0	6
04	8.0	8
05	11.0	11
06	13.0	13
07	15.0	15
08	17.0	17
09	21.0	21

Code	Exact Ratio	1
10	25.0	25
11	29.0	29
12	35.0	35
13	43.0	43
14	51.0	51
15	59.0	59
16	71.0	71
17	87.0	87
18	119.0	119

TWO STAGE

Code	Exact Ratio	2	1
19	102.0	17	6
20	104.0	13	8
21	121.0	11	11
22	143.0	13	11
23	165.0	15	11
24	174.0	29	6
25	187.0	17	11
26	195.0	15	13
27	210.0	35	6
28	231.0	21	11
29	258.0	43	6
30	273.0	21	13
31	289.0	17	17
32	319.0	29	11
33	354.0	59	6
34	357.0	21	17
35	377.0	29	13
36	385.0	35	11
37	425.0	25	17
38	435.0	29	15
39	473.0	43	11
40	493.0	29	17
41	522.0	87	6
42	525.0	25	21
43	559.0	43	13
44	595.0	35	17
45	649.0	59	11
46	731.0	43	17
47	841.0	29	29
48	957.0	87	11
49	1003.0	59	17
50	1131.0	87	13
51	1225.0	35	35
52	1247.0	43	29
53	1479.0	87	17
54	1505.0	43	35
55	1711.0	59	29
56	1849.0	43	43
57	2065.0	59	35
58	2193.0	51	43
59	2537.0	59	43
60	3045.0	87	35
61	3481.0	59	59
62	3741.0	87	43
63	4437.0	87	51
64	5133.0	87	59
65	6177.0	87	71
66	7569.0	87	87

THREE STAGE

Code	Exact Ratio	3	2	1
67	9,251	29	29	11
68	10,933	29	29	13
69	13,629	59	21	11
70	16,211	43	29	13
71	20,339	43	43	11
72	24,037	43	43	13
73	27,907	59	43	11
74	31,433	43	43	17
75	38,291	59	59	11
76	43,129	59	43	17
77	53,621	43	43	29
78	59,177	59	59	17
79	73,573	59	43	29
80	79,507	43	43	43
81	109,091	59	43	43
82	149,683	59	59	43
83	446,571	87	87	59
84	658,503	87	87	87

Section 9:

Gearboxes: SMSR

The Fenner® SMSR PowerPLUS offers a rugged design and a 50% increase in the power to weight ratio over older versions. The powerPLUS range is more compact for easier handling and features an increased range of bore sizes.

- 13 sizes in the range
- Three standard bore options
- Bore sizes range from 20mm to 190mm
- Torque capacity up to 45,000Nm
- Taper-Grip bush for easy removal and fitting
- Ratios up to 200:1 with a simple belt drive

Geared Drives: Design Data Required	
Motorised (integral motor) or non-motorised?	> If motorised: electrical supply available any special motor features required (brake, thermistors, flameproof etc.) > If non-motorised: type of prime mover rotational speed of prime mover power rating of prime mover is an input shaft coupling required? If so, prime mover shaft dia.
Shaft mounting or flange mounted?	> If shaft mounted, machine shaft diameter/length if flange mounted, is an output shaft and coupling required?
Orientation of input/output?	> parallel or right angle?
Type of driven machine	
Rotational speed of driven machine	> constant or variable over what range?
Power absorbed by driven machine (or required output torque)	
Hours/day duty & start/stop frequency	

Fenner SMSR	Page
Selection	385
Power Ratings	386
Output Hub Dimensions	387
SMSR Power Plus Dimensions	388
Exact Ratios	389
Taper Grip	390
Ordering Instructions	391
Belt Drives	392
Installation	396
Spare Parts	397
Lubrication	399
Spiral T	**Page**
Selection	400
Power Ratings	401
Dimensions	401

Visit www.fptgroup.com

Fenner SMSR

Rugged, compact design.

- 13 sizes in the range
- Three standard bore options
- Bore sizes range from 20mm to 190mm
- Torque capacity up to 45,000Nm
- Taper-Grip bush for easy removal and fitting
- Ratios up to 200:1 with a simple belt drive

Fenner®

THE MARK OF ENGINEERING EXCELLENCE

www.fptgroup.com

SMSR Gearboxes : Selection Procedure

GEARBOX SELECTION PROCEDURE

(a) Service Factor
From Table 1 select the service factor applicable to the drive.

(b) Design Power
Multiply the absorbed power (or motor power if absorbed power not known) by the service factor chosen in step (a).

NOTE:
Gear units are momentarily capable of transmitting twice (2x) the rated capacity on start or during operation.

(c) Unit Selection
Using the value from step (b) refer to the power rating tables on page 386 and select the correct size of unit.

The choice of single or double reduction gearbox will be determined by the output speed required. The normal operating speeds for each of the gearboxes may be observed in the power rating and belt drive tables.
For other speeds consult your local Authorised Distributor.

BELT DRIVE SELECTION

Selection of associated belt drive for 1440 rev/min. electric motors

(d1) Output Speed
Refer to the Drive Selection Tables (pages 392 to 395 and under the appropriate gearbox size and ratio read down the column headed 'Output Speed' until an Output Speed equal or near to that required is found.

The suggested ratio is given in the first column.

(e1) Pulley Diameters
Read across from the chosen output speed to obtain both driving and driven pulley pitch diameters, groove section and the appropriate number of belts.

NOTE:
In many instances one belt is recommended, being adequate for power transmission purposes; where customer preference is for multi-belt drives consult your local Authorised Distributor.

(f1) Centre Distance
Belt length and centre distance can be found by referring to pages 40-51.

(g1) Hub Bore Size
Refer to the output hub dimensions table on page 387 for the range of bore sizes available. **Selection of associated belt drive for driving speeds other than 1440 rev/min.**

(d2) Gearbox Input Shaft Speed
Multiply the gearbox output speed by the exact gear ratio (found in the table on page 389) to obtain the gearbox input shaft speed.

(e2) Selection of 'V'-Drive
The correct belt drive can now be selected by referring to page 38.

NOTE:
Wedge belt drives shown on pages 392 to 395 have been selected to give the most economical total drive package for the speed required. If it is necessary to design a special drive it is advisable to consult your local Authorised Distributor.

Torque arm should preferably be in tension when unit is in operation. See page 296. If in any doubt consult your local Authorised Distributor.

EXAMPLE

A Shaft Mounted Speed Reducer is required for a uniformly loaded elevator which absorbs 3.6 kW at 50 rev/min. The prime mover is a 4 kW 1440 rev/min. direct on line start electric motor. A belt drive is required between the motor and gearbox at approximately 700 mm centres running for up to 24 hours/day.

SOLUTION

Selection Procedure

(a) Service factor
From Table 1 the service factor is 1.25.

(b) Design Power
Using the elevator absorbed power of 3.6 kW.
Design Power = 1.25 x 3.6 = 4.5 kW.

(c) Unit Selection
Using 4.5 kW as the basis for selection reference to the power rating tables (page 386) indicates that an E13 or E20 gear unit will transmit 6.48 kW at 50 rev/min.

Selection of associated belt drive

(d) Output Speed
A more economic belt drive will be obtained if the 20:1 ratio gearbox is selected, and by reference to page 393in the gearbox drive tables 50 rev/min. is obtainable.

(e) Pulley Diameters
On the line giving the output speed of 50 rev/min read across and note the driving and driven pulley pitch diameters together with the numbers of belts required, which for this case is 106 mm and 150 mm, using 2 XPA Wedge Belts.

(f) Belt Selection
By reference to page 44 it can be seen that XPA 1800 belts give 699 mm centres.

(e) Available Bores
By refering to the output hub bore dimensions table on page 387, it can be seen that the size E is available with a range of bore sizes in both parallel bore and Taper Grip bush.

Parallel bore sizes are 55, 50 and 65mm whilst Taper Grip is available in 42mm and 55mm.

TABLE 1—SERVICE FACTORS

Types of Driven Machine	Operational Hours Per Day		
	Under 10	10 to 16	Over 16
Uniform Loads Agitators and Mixers - liquid or semi-liquid Blowers - centrifugal Bottling Machines Conveyors and Elevators - uniformly loaded Cookers Laundry Washing Machines - non-reversing Line Shafts Pumps – centrifugal and gear Wire Drawing Machines	1.00	1.12	1.25
Moderate Shock Loads Agitators and Mixers - variable density Conveyors - not uniformly loaded Cranes. travel motion and hoisting Drawbench Feeders - pulsating load Hoists Kilns Laundry Tumblers Lifts Piston Pumps - with 3 or more cylinders Pulp and Paper making machines Rubber Mixers and Calenders Rotary Screens Textile Machinery	125	1.40	1.60
Heavy Shock Loads Brick presses Briquetting Machines Conveyors - reciprocating and shaker Crushers Feeders - reciprocating Hammer Mills Piston Pumps - 1 or 2 cylinders Rubber Masticators Vibrating Machines	1.60	1.80	2.00

SMSR Gearboxes : Power Ratings

POWER RATINGS (KW) 5:1 UNITS (SINGLE REDUCTION)

Output rev/ min	B	C	D	E	F	G	H	J	S	T
100	2.68	4.62	7.24	11.36	16.64	28.80	41.3	63.5	86.4	113.7
110	2.87	4.84	7.58	11.89	17.42	30.14	43.3	66.5	90.4	119.0
120	3.13	5.05	7.91	12.42	18.20	31.48	45.2	69.5	94.5	124.3
130	3.36	5.27	8.25	12.95	18.97	32.83	47.1	72.4	98.5	129.7
140	3.56	5.49	8.59	13.48	19.75	34.17	49.1	75.4	102.5	135.0
150	3.62	5.70	8.93	14.01	20.53	35.52	51.0	78.4	106.5	140.3
160	3.73	5.92	9.27	14.54	21.30	36.86	52.9	81.3	110.6	145.6
170	3.83	6.13	9.60	15.07	22.08	38.20	54.9	84.3	114.6	150.9
180	3.94	6.35	9.94	15.60	22.86	39.55	56.8	87.3	118.6	156.2
190	4.04	6.57	10.28	16.13	23.63	40.89	58.7	90.2	122.7	161.5
200	4.20	6.78	10.62	16.66	24.41	42.24	60.6	93.2	126.7	166.8
210	4.31	7.00	10.95	17.19	25.19	43.58	62.6	96.2	130.7	172.1
220	4.41	7.21	11.29	17.72	25.96	44.92	64.5	99.1	134.8	177.4
230	4.53	7.43	11.63	18.25	26.74	46.27	66.4	102.1	138.8	182.7
240	4.66	7.64	11.97	18.78	27.52	47.61	68.4	105.0	142.8	188.0
250	4.78	7.86	12.31	19.31	28.29	48.95	70.3	108.0	146.9	193.3
260	4.89	8.08	12.64	19.84	29.07	50.30	72.2	111.0	150.9	195.5
270	5.04	8.29	12.98	20.37	29.85	51.64	74.1	113.9	154.9	
280	5.20	8.51	13.32	20.90	30.62	52.99	76.1	115.9	159.0	
290	5.36	8.72	13.66	21.43	31.40	54.33	78.0		160.2	
300	5.46	8.94	13.99	21.96	32.18	55.67	79.9	CONSULT YOUR LOCAL AUTHORISED DISTRIBUTOR		
310	5.62	9.15	14.33	22.49	32.95	57.02	81.9			
320	5.78	9.37	14.67	23.02	33.73	58.36	83.8			
330	5.88	9.59	15.01	23.55	34.51	59.70				
340	6.09	9.80	15.35	24.08	35.29	61.05				
350	6.30	10.02	15.68	24.61	36.06	62.39				
360	6.41	10.23	16.02	25.14	36.84	63.74				
370	6.62	10.45	16.36	25.67	37.62	65.08				
380	6.72	10.66	16.70	26.20	38.39					
390	6.93	10.88	17.04	26.73	39.17					
400	7.14	11.10	17.37	27.26	39.95					
Torque at 100 rev/min Nm	256	442	691	1085	1589	2750	3949	6068	8250	10862

POWER RATINGS (KW) 13:1. 20:1 AND 25:1 UNITS (DOUBLE REDUCTION)

Output rev/ min	B	C	D	E	F	G	H	J	S	T	K	L	M
10	0.29	0.54	0.85	1.34	1.96	3.39	4.86	7.5	10.2	13.4	19.0	26.4	46.1
12	0.36	0.67	1.04	1.64	2.40	4.16	5.97	9.2	12.5	16.4	22.5	31.4	54.9
14	0.42	0.79	1.24	1.94	2.84	4.92	7.07	10.9	14.8	19.4	25.9	36.3	63.5
16	0.47	0.91	1.43	2.24	3.29	5.69	8.17	12.6	17.1	22.5	29.3	41.3	72.1
18	0.53	1.04	1.62	2.55	3.73	6.46	9.27	14.2	19.4	25.5	32.6	46.1	80.5
20	0.59	1.16	1.82	2.85	4.18	7.22	10.37	15.9	21.7	28.5	35.9	51.0	88.9
22	0.63	1.28	2.01	3.15	4.62	7.99	11.47	17.6	24.0	31.6	39.2	55.7	97.1
24	0.69	1.41	2.20	3.46	5.06	8.76	12.57	19.3	26.3	34.6	42.3	60.4	105.3
26	0.75	1.53	2.39	3.76	5.51	9.53	13.68	21.0	28.6	37.6	45.6	65.1	113.0
28	0.81	1.65	2.59	4.06	5.95	10.29	14.78	22.7	30.9	40.7	48.7	69.7	120.6
30	0.86	1.78	2.78	4.36	6.39	11.06	15.88	24.4	33.2	43.7	51.7	74.4	128.0
32	0.92	1.90	2.97	4.67	6.84	11.83	16.98	26.1	35.5	46.7	54.9	78.8	135.2
34	0.98	2.02	3.17	4.97	7.28	12.59	18.08	27.8	37.8	49.7	57.9	83.4	142.5
38	1.10	2.15	3.36	5.27	7.72	13.36	19.18	29.5	40.1	52.8	63.7	92.5	157.0
40	1.16	2.27	3.55	5.57	8.17	14.13	20.29	31.2	42.4	55.8	66.6	96.8	164.2
42	1.20	2.39	3.74	5.88	8.61	14.90	21.39	32.9	44.7	58.8	69.2	101.1	171.5
46	1.30	2.51	3.94	6.18	9.05	15.66	22.49	34.6	47.0	61.9	74.3	109.4	186.0
50	1.42	2.64	4.13	6.48	9.50	16.43	23.59	36.3	49.3	64.9	79.0	117.5	199.2
52	1.47	2.76	4.32	6.78	9.94	17.20	24.69	37.9	51.6	67.9	81.5	120.8	206.5
54	1.52	2.88	4.52	7.09	10.38	17.96	25.79	39.6	53.9	71.0	83.8	125.6	213.7
58	1.64	3.01	4.71	7.39	10.83	18.73	26.89	41.3	56.2	74.0	88.5	132.8	225.8
62	1.76	3.13	4.90	7.69	11.27	19.50	28.00	43.0	58.5	77.0	93.0	140.1	237.9
66	1.86	3.25	5.09	7.99	11.71	20.27	29.10	44.7	60.8	80.0	97.5	147.3	248.7
70	1.96	3.38	5.29	8.30	12.16	21.03	30.20	46.4	63.1	83.1	102.0	154.6	259.6
74	2.06	3.50	5.48	8.60	12.60	21.80	31.30	48.1	65.4	86.1	104.1	157.0	270.5
78	2.15	3.72	5.83	9.15	13.41	23.20	33.31	51.2	69.6	91.6	110.4	167.8	280.1
80	2.23	3.95	6.18	9.70	14.22	24.60	35.32	54.3	73.8	97.2	112.6		
85	2.34	4.17	6.54	10.26	15.03	26.00	37.33	57.4	78.0	102.7	CONSULT YOUR LOCAL AUTHORISED DISTRIBUTOR		
90	2.48	4.40	6.89	10.81	15.84	27.40	39.34	60.5	82.2	108.2			
95	2.61	4.62	7.24	11.36	16.64	28.80	41.35	63.5	86.4	113.6			
100	2.73	4.62	7.24	11.36	16.64	28.80	41.35		86.4				
Torque at 10 rev/min Nm	277	519	812	1276	1870	3235	4645	7139	9706	12778	18120	25254	44051

The dotted line shows the limit of recommended output speed for reducers with 20:1 and 25:1 ratios.
For higher speeds use a 13:1 or 5:1 reducer.

SMSR Gearboxes : Output Hubs

OUTPUT HUB DIMENSIONS ('B' DIMENSION FROM PAGE 388)

Reducer Size	Standard Bore	Bush Options *		Alternate Bore	Bush Options *		Taper Grip Bush Options **	
		Metric	Imperial		Metric	Imperial	Metric	Imperial
B	30	20	3/4"	40	30	1.1/4"	20	13/16"
		25	1"		32		25	1"
					35		30	1.3/16"
C	40	30	1.1/4"	50	38	1.1/4"	30	1.3/16"
		32			40	1.3/8"	35	1.1/4"
		35			42	1.1/2"	40	1.5/16"
					45	1.3/4"		1.3/8"
								1.1/2"
D	50	38	1.1/4"	55	42	1.1/2"	38	1.7/16"
		40	1.3/8"		45	1.3/4"	40	1.1/2"
		42	1.1/2"		50	2"	45	1.3/4"
		45	1.3/4"				50	1.15/16"
E	55	42	1.1/2"	65	50	2"	42	1.11/16"
		45	1.3/4"		55	2.1/4"	45	1.7/8"
		50	2"		60		48	1.15/16"
							50	2"
							55	2.3/16"
F	65	50	2"	75	70	2.3/4"	50	1.15/16"
		55	2.1/4"		65	2.1/2"	55	2"
		60			60	2.1/4"	60	2.1/8"
							62	2.3/16"
							65	2.1/4"
								2.3/8"
								2.7/16"
G	75	70	2.3/4"	85	70	2.1/2"	60	2.3/16"
		65	2.1/2"		75	2.3/4"	65	2.1/4"
		60	2.1/4"		80	3"	70	2.7/16"
							75	2.1/2"
								2.11/16"
								2.3/4"
								2.15/16"
								3"
H	85	70	2.1/2"	100	85	3.1/2"	65	2.7/16"
		75	2.3/4"		90		70	2.1/2"
		80	3"		95		75	2.11/16"
							80	2.7/8"
							85	2.15/16"
								3"
								3.7/16"
J	100	85	3.1/2"	120	90	4"	80	2.15/16"
		90			100	4.1/2"	85	3"
		95			110		90	3.3/16"
							95	3.7/16"
							100	3.1/2"
								3.15/16"
S	120	90	4"	125	90	3.1/2"	90	3.7/16"
		100	4.1/2"		100	4"	100	3.15/16"
		110			110	4.1/2"	110	4.7/16"
							115	4.1/2"
							120	
K	125	90	3.1/2"				100	3.15/16"
		100	4"				110	4.7/16"
		110	4.1/2"				120	4.1/2"
							125	4.15/16"
L	150	100	4.1/2"				115	4.7/16"
		125	5"				125	4.15/16"
		130	5.1/2"				130	5"
							140	5.3/16"
							150	5.7/16"
								5.1/2"
								5.15/16"
M	190	Other bore sizes are available on request - Please consult your local authorised distributor						

* Reduction Bushes are supplied with either two separate keys or a single stepped key, depending on the bush wall thickness
Metric hubs are bored to F7 limits recommended for use with h7 shaft tolerances
Imperial bushes are bored to H7 limits recommended for use on shafts with h7 tolerances

** Taper-Grip® Bushes can be used with shaft tolerances up to h11 - some AGMA hubs listed are not stocked but available on request. Refer to page 390 for further details

STANDARD HUB KEYWAYS

Keyways for metric shafts and bushes are machined in accordance with BS4235 and Imperial shafts and bushes are according to BS46.

The shaft keyway should be machined to suit the standard key size below.

Output keys are not supplied with standard gearboxes where bushes are not supplied.

METRIC BORES

Shaft Diameter (mm)	Key Size
20	6 x 6
25	8 x 7
30	8 x 7
32	10 x 8
35	10 x 8
38	10 x 8
40	12 x 8
42	12 x 8
45	14 x 9
50	14 x 9
55	16 x 10
60	18 x 11
65	18 x 11
70	20 x 12
75	20 x 12
80	22 x 14
85	22 x 14
90	25 x 14
95	25 x 14
100	28 x 16
110	28 x 16
120	32 x 18
125	32 x 18
130	32 x 18
140	36 x 20
150	36 x 20
190	45 x 25

IMPERIAL BORES

Shaft Diameter (inches)	Key Site (Inches)
3/4"	3/16" x 3/16"
1"	1/4" x 1/4"
1.1/4"	5/16" x 1/4"
1.1/2"	3/8" x 1/4"
1.3/4"	7/16" x 5/16"
2"	1/2" x 5/16"
2.1/4"	5/8" x 7/16"
2.1/2"	5/8" x 7/16"
2.3/4"	3/4" x 1/2"
3"	3/4" x 1/2"
3.1/2"	7/8" x 5/8"
4"	1" x 3/4"
4.1/2"	1.1/4" x 7/8"
5"	1.1/4" x 7/8"
5.1/2"	1.1/2" x 1"

SMSR Gearboxes : Dimensions

DIMENSIONS—SHAFT AND FLANGE MOUNTING

B - T

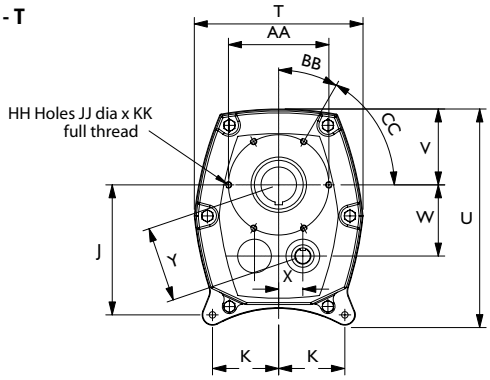

FLANGE MOUNTED

Extra case bolts are present on sizes J. S + T but are not detailed on these drawings, however Torque Arm anchorage points are as dimensioned. If in doubt consult your local Authorised Distributor

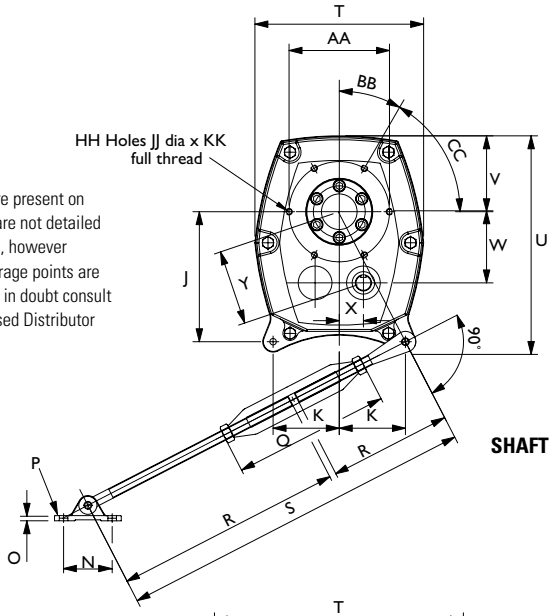

SHAFT MOUNTED

K - L - M

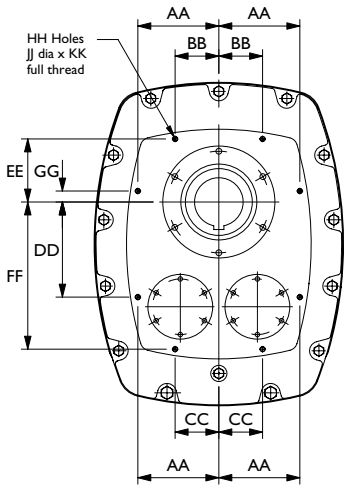

FLANGE MOUNTED

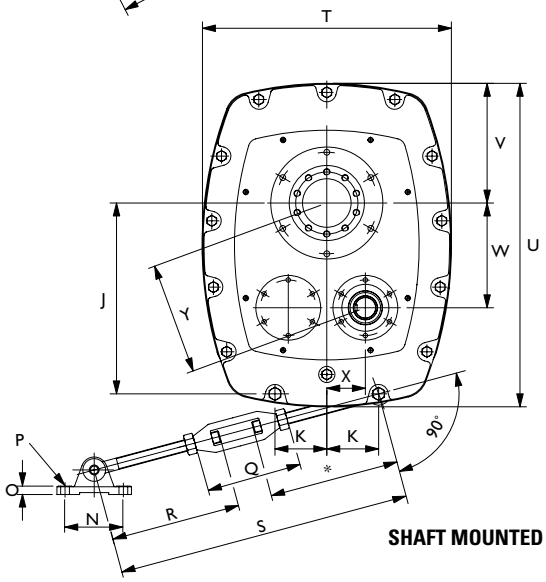

SHAFT MOUNTED

B - T

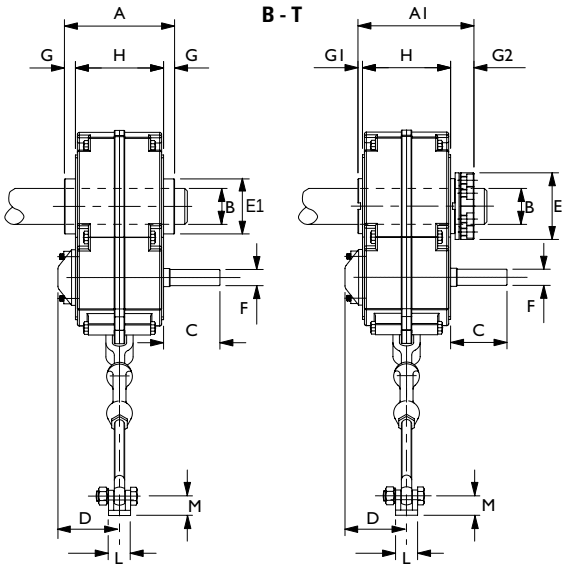

STANDARD HUB **TAPER-GRIP™ HUB**

K - L - M

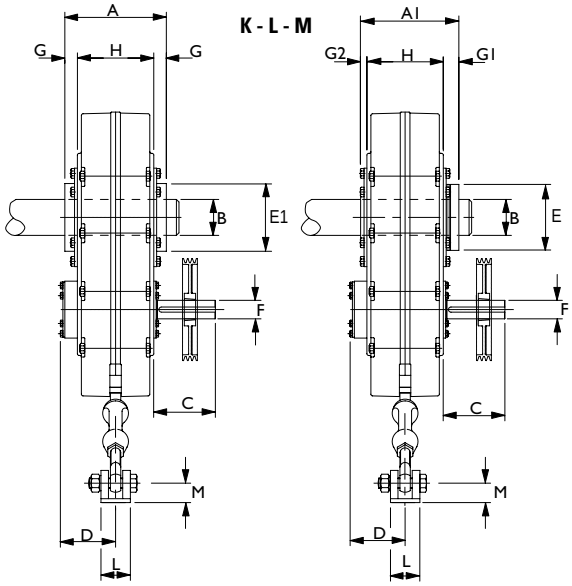

STANDARD HUB **TAPER-GRIP™ HUB**

* On size L only this dimension is 375mm

SMSR Gearboxes : Dimensions

DIMENSIONS—SHAFT AND FLANGE MOUNTING

Dimension		SMSR Size												
		B	C	D	E	F	G	H	J	S	T	K	L	M
A		123	152	161	173	195	214	255	275	290	306	310	356	406
A1		138	162	170	184	201	231	261	272	278	290	297	345	395
B		See Output Hub Dimensions Table on Page 277												
C		61	73	82	87	95	100	115	126	145	180	186	216	241
D		65	82	93	95	108	114	127	132	123	132	196	203	225
E		74	82	92	104	114	138	152	170	186	207	181	200	240
E1		55	65	75	85	100	110	130	150	160	180	197	224	264
F		19	19	22	25	28	32	42	48	55	60	60	65	85
G		14	17	17	19	20	20	26	30	35	41	44	44	44
G1		7	7	7	7	7	7	7	7	7	7	21	22	22
G2		36	37	36	42	39	50	51	50	51	59	54	55	55
H		95	118	127	135	155	174	203	215	220	224	222	268	318
J		106	139	169	201	238	261	294	353	456	519	516	590	677
K		69	76	84	102	121	133	152	145	157	160	102	160	190
L		24	24	28	28	34	34	70	70	70	70	70	110	110
M		20	20	24	24	30	30	50	50	50	50	51	76	76
N		65	65	75	75	100	100	120	120	120	120	120	180	180
O		5	5	8	8	12	12	18	18	18	18	18	26	26
P		10	10	13	13	17	17	16	16	16	16	M16	M24	M24
Q		200	200	216	216	216	216	222	222	222	222	222	265	265
R		300	300	350	350	375	375	375	375	375	375	375	400	400
St†	Min	467	467	539	539	621	621	638	638	638	638	750	800	800
	Max	617	617	689	689	771	771	788	788	788	788	900	950	950
T		160	186	218	258	278	317	365	434	542	568	643	770	880
U		208	234	282	330	385	421	477	570	734	814	841	1000	1140
V		72	81	96	117	129	143	162	195	254	281	298	370	410
W		66	75	90	110	125	141	156	189	255	267	280	324	373
X		24	25	31	37	43	50	56	62	75	92	100	119	133
Y		70	79	95	116	133	150	166	200	266	282	297	345	396
AA		106	120	135	155	175	212	255	280	280	320	208	250	315
BB		45°	45°	45°	30°	30°	30°	0°	0°	22.5°	22.5°	60	135	130
CC		90°	90°	90°	60°	60°	60°	60°	45°	45°	45°	60	135	130
DD		-	-	-	-	-	-	-	-	-	-	227	294	280
EE		-	-	-	-	-	-	-	-	-	-	176	195	215
FF		-	-	-	-	-	-	-	-	-	-	413	455	535
GG*		-	-	-	-	-	-	-	-	-	-	-19	34	-40
JJ		M8	M10	M10	M10	M12	M16	M20	M20	M20	M20	M16	M16	M16
HH		4	4	4	6	6	6	5	7	8	8	8	8	8
KK		15	15	15	15	18	24	30	30	30	30	27	27	27
Weight (kg)	single	10	14	22	32	45	64	100	144	211	256			
	double	11	15	24	34	49	69	108	155	219	282	385	545	740
Packaged Weight		13	18	26	36	55	84	123	175	252	316	477	705	940

All dimensions are in millimetres. Keyways are British Standard metric.
* Measured in the direction of DD.
† Permits 150mm adjustment to tighten V-Belts. By cutting off threaded end of rods dimension 'S' may be reduced by up to 300mm sizes B & C. 350mm on sizes D & E, 395mm on sizes F, G, H, J & S, 300mm on size K, 330mm on size L, 335mm on size M.

EXACT GEAR RATIOS

Nominal Ratio	B	C	D	E	F	G	H	J	S	T	K	L	M
5:1	5.091	4.941	5.300	5.047	5.047	5.047	5.047	5.047	5.047	4.684	-	-	-
13:1	13.315	13.410	14.268	13.587	13.587	13.395	13.587	13.587	13.587	13.644	13.270	13.260	12.850
20:1	20.095	20.421	21.481	20.455	20.455	20.455	20.455	20.455	20.455	20.113	19.970	19.580	19.330
25:1	-	23.544	25.600	25.235	25.235	25.235	25.235	25.235	25.235	23.654	24.000	24.733	22.601

SMSR Gearboxes : Taper Grip

STANDARD HUB KEYWAYS

Fenner Shaft Mounted Speed Reducers can be secured to the driven shaft by a unique bush locking system which overcomes the difficulties experienced with other methods of mounting, particularly in corrosive environments.

The new design includes cap head screws for higher tightening torques and a hardened steel thrust plate. These two new features are responsible for part of the significant torque increase.

UP-RATED TAPER-GRIP

- Transmits 300% more torque
- Accommodates shaft tolerances to h11
- Standard bores require no key
- Accessible locking arrangement
- Reversible bush assembly
- Resistant to fretting corrosion
- Even easier removal of gear unit

Assembly
After the bush is screwed into the hub the reducer can be conveniently positioned on the driven shaft. Locking is effected by sequential tightening of the screws which draw the bush axially against the opposing tapers in the hub thus generating the clamping force along the whole length of the bush in contact with the shaft.

Removal
The Taper-Grip system offers significant advantages when removing the reducer from the shaft.

There is a tendency for Shaft Mounted Reducers, subject to atmospheric or fretting corrosion, to seize solidly onto the shaft, making removal difficult and time-consuming.

The Taper-Grip system eliminates this problem, the bush is manufactured from spheroidal graphite iron which not only has similar mechanical properties to steel but has a natural resistance to corrosion and a degree of self-lubricity.

This combination of dissimilar materials in contact alleviates fretting corrosion and when the bush screws are loosened and the tapers released there is sufficient clearance within the assembly to permit easy removal.

Because the bush is screwed into the hub it is inherently safe. Even if the locking screws are completely removed it cannot inadvertently fall out during reducer handling.

Use of smaller than standard bores on Taper-Grip bushes
For applications where it is desirable to fit Taper-Grip bushes with bores smaller than the standard catalogue sizes, depending on the size, the torque capacity of the bush may be below the quoted catalogue ratings. In these situations it is preferable to fit a key to the bush/shaft interface.

In these cases please consult your local Authorised Distributor.

TRANSMITS 300% MORE TORQUE

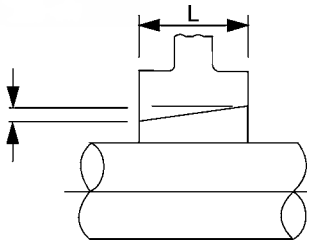

Taper Lock®

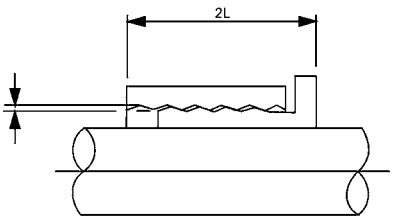

Taper Grip™

SMSR Gearboxes : Ordering Instructions

GEARBOX CODING

The required unit is identified by an eight digit code as under:

First Three Digits:	Product Prefix	Constant 116
Fourth Digit:	Unit Size	B C D E F G H J S T K L M
Fifth and Sixth Digits:	Ratio Code	05. 13. 20 & 25
Seventh Digit:	Indicates Assembly	0 Shaft Mounted Speed Reducer
Eighth Digit: bore required	Indicates Output Hub 2 Upper Alternative Metric bore † 5 Taper-Grip Hub	1 Standard Metric bore †

† The hub bushes in the table opposite can be used in all three parallel hub bore options.

Example
Size G Unit 20:1 nominal Gear Ratio. shaft mounted with standard Metric Hub Bore (75mm) 116G2001.

If Backstop or Output Bushes are required, these should be ordered separately. e.g. 116G2001 complete with Backstop and 60 mm Output Hub Bushes.

TAPER-GRIP CODING

Taper-Grip units are supplied without the Taper-Grip Bush. These should be ordered separately, see table below.

First Three Digits:	**Product Prefix**	012 Metric bores		013 Inch bores	
Fourth Digit:	**Unit Size**	B C D E F G H J S T K L M			
Fifth Digit:	**Constant**	1			
Seventh Eighth and Ninth Digits:	**Indicates Taper-Grip bore size in millimetres or inches**	**Metric Bore**	**Bore Code**	**Inch Bore**	**Bore Code**
	Example Size G Unit 20:1 nominal Gear Ratio. Shaft mounted with Metric Taper-Grip Bore (75mm). SMSR code is 116G2005. Taper-Grip bush code is 012G1075.	25	025	11/4	104
		30	030	11/2	108
		35	035	2	200
		40	040	21/2	208
		45	045	3	300
		50	050		
		55	055		
		60	060		
		65	065		
		75	075		
		85	085		
		90	090		
		100	100		
		120	120		
		125	125		
		130	130		
		150	150		
		190	190		

BACKSTOP CODING

The required backstop size is identified by an eight digit code:

First Three Digits:	Product Prefix	044
Fourth Digit:	Unit Size	B C D E F G H J S T K L M
Fifth, Sixth, Seventh and EighthDigits:	Product Suffix	0003

Example:
044G0003 - Size G PowerPlus backstop

SMSR PARALLEL HUB SIZE

Hub Dia. (mm)	SMSR Size		Shaft Dia.		Bush Code
	Alt.	Std.	inch	mm	
30	-	B	0.75	-	016A9106
30	-	B	-	20	016A9220
30	-	B	-	25	016A9225
30	-	B	1.00	-	016A9110
40	-	C	-	30	016C9230
40	B	C	1.25	-	016B9112
50	-	D	1.25	-	016D9112
40	B	C	-	32	016B9232
40	B	C	-	35	016B9235
50	C	D	-	38	016C9238
50	C	D	1.50	-	016C9114
55	-	E	1.50	-	016E9114
50	-	D	-	40	016D9240
50	C	D	-	42	016C9242
55	-	E	-	42	016E9242
50	C	D	1.75	-	016C9116
55	-	E	1.75	-	016E9116
50	C	D	-	45	016C9245
55	-	E	-	45	016E9245
55	-	E	-	50	016E9250
65	-	F	-	50	016F9250
55	D	E	2.00	-	016D9120
65	-	F	2.00	-	016F9120
65	-	F	-	55	016F9255
65	E	F	2.25	-	016E9122
75	-	G	2.25	-	016G9122
65	E	F	-	60	016E9260
75	-	G	-	60	016G9260
75	F	G	2.50	-	016F9124
85	-	H	2.50	-	016H9124
75	-	G	-	65	016G9265
75	F	G	2.75	-	016F9126
85	-	H	2.75	-	016H9126
75	F	G	-	70	016F9270
85	-	H	-	70	016H9270
85	-	H	-	75	016H9275
85	G	H	3.00	-	016G9130
85	G	H	-	80	016G9280
100	H	J	-	85	016H9285
100	H	J	3.50	-	016H9134
120	-	S	3.50	-	016S9134
125	-	T/K	3.50	-	016K9134
100	H	J	-	90	016H9290
120	-	S	-	90	016S9290
125	S	T/K	-	90	016K9290
100	H	J	-	95	016H9295
120	-	S	-	100	016S9200
125	S	T/K	-	100	016K9200
150	-	L	-	100	016L9200
120	J	S	4.00	-	016J9140
125	S	T/K	4.00	-	016K9140
120	J	S	-	110	016J9210
125	S	T/K	-	110	016K9210
120	J	S	4.50	-	016J9144
125	S	T/K	4.50	-	016K9144
150	-	L	4.50	-	016L9144
150	-	L	-	125	016L9225
150	-	L	5.00	-	016L9150
150	-	L	-	130	016L9230
150	-	L	5.50	-	016L9154

OPTIONAL EXTRAS

Backstops
Incorporated to prevent reversal of rotation. Quickly installed within the reducer, by simply removing a cover plate.

Flange Mounting
All gear cases now have drilled and tapped holes in the input drive face for bolting direct to a supporting framework. This flange mounting use of the reducer eliminates a bearing or pillow block. However the belt adjustment feature of shaft mounting is also lost, see page 396.

Reversing Duty
Shaft Mounted Speed Reducers suitable for reversing duty can be supplied to order.

Vertical Shafts
Units suitable for mounting on vertical shafts can be supplied at extra charge. When ordering, please specify whether input shaft is above or below.

AGMA Output Hubs
Bores conforming to North American standards are available.

Screw Conveyors
Screw conveyor adaptors conforming to CEMA mounting specifications are available.

SMSR Gearboxes : Belt Drives

BELT DRIVES - 1440 REV/MIN MOTORS

UNIT SIZE B

	Nominal Output Speed	Puller Ratio	Pulley Pitch Dia.		Number of Belts
			Motor	Gearbox	
20:1	10	7.14	56	400	1XPZ
	12	5.97	67	400	1SPZ
	14	5.00	63	315	1SPZ
	16	4.44	71	315	1SPZ
	18	3.94	80	315	1SPZ
	20	3.57	56	200	1XPZ
	22	3.21	56	180	1XPZ
	24	2.86	63	180	1XPZ
	26	2.78	90	250	1SPZ
	28	2.54	63	160	1SPZ
	30	2.36	56	132	1XPZ
	32	2.22	63	140	1SPZ
	34	2.10	63	132	1SPZ
	38	1.87	67	125	1SPZ
	40	1.78	63	112	1XPZ
	42	1.70	56	95	2XPZ
	46	1.56	90	140	1SPZ
	50	1.43	112	160	1SPZ
	52	1.39	90	125	1SPZ
	54	1.33	75	100	1SPZ
	58	1.24	95	118	1SPZ
	62	1.16	140	160	1SPZ
	66	1.64	63	67	2SPZ
13:1	66	1.64	85	140	1SPZ
	70	1.55	85	132	1SPZ
	74	1.46	90	132	1SPZ
	78	1.39	90	125	1SPZ
	80	1.35	63	85	2XPZ
	85	1.28	125	160	1SPZ
	90	1.20	75	90	2SPZ
	100	1.08	90	100	1QXPA
5:1	100	2.83	112	315	1SPZ
	110	2.57	95	250	1XPA
	120	2.36	106	250	1XPZ
	130	2.18	112	250	1XPZ
	140	2.02	125	250	1SPZ
	150	1.88	85	160	2SPZ
	160	1.76	85	150	2XPA
	170	1.67	75	125	3SPZ
	180	1.57	75	118	3SPZ
	190	1.49	95	140	2SPZ
	200	1.42	106	150	1QXPA
	210	1.35	112	150	1QXPA
	220	1.29	140	180	1SPA
	230	1.23	132	160	1SPA
	240	1.18	95	112	2SPZ
	250	1.13	160	180	1XPZ
	260	1.09	140	150	1SPA
	270	1.05	95	100	2SPA
	280	1.01	112	112	2SPZ
	300	1.06	140	132	1XPA
	310	1.11	200	180	1XPZ
	320	1.14	150	132	1XPA
	330	1.18	100	85	3SPZ
	340	1.20	150	125	1QXPA
	350	1.24	118	95	2XPA
	360	1.27	400	315	1XPZ
	370	1.31	236*	180*	1SPB
	380	1.36	160	118	1QXPA
	390	1.39	250	180	1SPZ
	400	1.41	315	224	1SPA

UNIT SIZE C

	Nominal Output Speed	Puller Ratio	Pulley Pitch Dia.		Number of Belts
			Motor	Gearbox	
20:1	10	7.04	71	500*	1SPZ
	12	5.63	71	400	1SPZ
	14	5.00	80	400	1SPZ
	15	4.44	71	315	1SPZ
	17	3.94	80	315	1SPZ
	20	3.50	90	315	1SPZ
	22	3.13	80	250	1SPZ
	24	2.94	85	250	1SPZ
	26	2.69	67	180	1SPZ
	28	2.40	75	180	1XPZ
	30	2.25	71	160	1XPZ
	32	2.13	75	160	1XPZ
	34	2.00	80	160	1XPZ
	38	1.80	100	180	1SPA
	40	1.70	106	180	1SPZ
	42	1.65	85	140	1XPZ
	46	1.50	100	150	1SPA
	50	1.36	118	160	1XPZ
	52	1.32	106	140	1XPZ
	54	1.29	140	180	1XPZ
	58	1.18	100	118	1XPA
	62	1.11	90	100	2SPZ
13:1	66	1.56	90	140	2SPZ
	70	1.47	85	125	2SPZ
	74	1.39	95	132	2SPZ
	78	1.32	106	140	1XPA
	80	1.28	125	160	1SPZ
	85	1.21	140	170	1XPZ
	90	1.14	140	160	2SPZ
	95	1.07	75	80	3XPZ
	100	1.00	100	100	2SPZ
5:1	101	2.86	140	400	1SPA
	114	2.52	125	315	1XPA
	121	2.39	132	315	1XPA
	129	2.23	112	250	2SPZ
	144	2.00	140	280	1XPA
	152	1.90	118	224	2SPA
	161	1.79	140	250	1XPA
	171	1.68	95	160	3SPZ
	183	1.58	200	315	1XPZ
	193	1.49	150	224	2SPA
	202	1.43	112	160	2SPZ
	211	1.36	132	180	2SPZ
	224	1.29	140	180	2SPZ
	230	1.25	160	200	2XPZ
	244	1.18	100	118	3XPZ
	252	1.14	140	160	2SPZ
	259	1.11	180	200	1SPA
	273	1.06	125	132	2SPZ
	288	1.00	140	140	2SPA
	303	1.05	100	95	2SPA
	310	1.08	140	130	3SPZ
	324	1.13	180	160	2SPZ
	329	1.14	140	160	3SPA
	339	1.18	200	170	2SPA
	349	1.21	160	132	2SPA
	360	1.25	140	112	3SPZ
	369	1.28	180	140	2XPZ
	380	1.32	150	112	2XPA
	391	1.36	180	132	2XPA
	400	1.39	140	100	3XPA

UNIT SIZE D

	Nominal Output Speed	Puller Ratio	Pulley Pitch Dia.		Number of Belts
			Motor	Gearbox	
20:1	10	1.04	71	500	1XPZ
	12	5.63	71	400	1SPZ
	14	4.70	67	315	1SPZ
	16	4.20	75	315	1SPZ
	18	3.71	85	315	1SPZ
	20	3.29	85	280	1SPZ
	22	3.11	90	280	1SPA
	24	2.78	90	250	1SPZ
	26	2.54	63	160	2XPZ
	28	2.39	67	160	2SPZ
	30	2.24	100	224	1XPA
	32	2.11	95	200	1XPA
	34	1.97	160	315	1SPZ
	38	1.76	75	132	2XPZ
	40	1.68	95	160	2SPZ
	42	1.60	125	200	1XPZ
	46	1.47	90	132	2SPZ
	50	1.34	112	150	2SPA
	52	1.29	140	180	1XPZ
	54	1.24	95	118	2SPZ
	58	1.14	140	160	1SPA
	62	1.07	140	150	1XPA
13:1	66	1.52	132	200	1SPA
	71	1.43	112	160	2XPZ
	74	1.36	118	160	2SPZ
	78	1.29	140	180	1XPA
	80	1.25	112	140	2XPZ
	85	1.19	118	140	2SPZ
	90	1.12	125	140	2SPZ
	95	1.06	132	140	2SPZ
	100	1.00	125	125	2XPZ
5:1	108	2.52	125	315	2XPZ
	114	2.39	132	315	2SPZ
	120	2.25	140	315	2SPZ
	130	2.11	112	236	2XPB
	140	1.90	118	224	2XPA
	150	1.80	118	212	2XPB
	160	1.69	118	200	3XPZ
	170	1.60	125	200	3SPZ
	180	1.52	132	200	3SPZ
	190	1.43	140	200	3SPZ
	200	1.36	132	180	2XPA
	210	1.29	140	180	2SPA
	220	1.21	132	160	3SPZ
	230	1.18	112	132	4XPZ
	240	1.12	112	125	4XPZ
	250	1.07	140	150	3SPA
	260	1.05	112	118	4XPZ
	270	1.00	140	140	3XPZ
	285	1.05	100	95	4QXPA
	290	1.07	160	150	2XPA
	300	1.11	200	180	2QXPZ
	310	1.14	160	140	3SPZ
	320	1.18	132	112	4XPZ
	330	1.21	160	132	3SPA
	340	1.25	250	200	2XPZ
	350	1.29	180	140	3XPZ
	360	1.32	140	106	5SPZ
	370	1.36	190	140	2XPB
	380	1.40	140	100	4XPA
	390	1.44	180	125	3XPA
	400	1.47	250	170	2XPB

* Pulley only available in 2 groove.
For 25:1 reduction SMSR belt drives consult your local Authorised Distributor

For installation and operation of belt drives,
see page 77 of this catalogue.

SMSR Gearboxes : Belt Drives

BELT DRIVES - 1440 REV/MIN MOTORS

UNIT SIZE E

	Nominal Output Speed	Puller Ratio	Pulley Pitch Dia.		Number of Belts
			Motor	Gearbox	
20:1	10	7.04	71	500	2SPZ
	12	5.97	67	400	2SPZ
	14	5.00	80	400	2SPZ
	16	4.44	90	400	1XPZ
	18	4.00	100	400	2SPZ
	20	3.50	90	315	2SPZ
	22	3.15	100	315	2SPZ
	24	2.94	85	250	2XPZ
	26	2.67	75	200	2XPZ
	28	2.50	80	200	3SPZ
	30	2.35	85	200	2SPZ
	32	2.22	90	200	2XPZ
	34	2.09	67	140	4XPZ
	38	1.87	150	280	1SPA
	40	1.75	80	140	3XPZ
	42	1.68	95	160	3SPZ
	46	1.52	132	200	2SPZ
	50	1.42	106	150	2XPA
	52	1.36	118	160	3SPZ
	54	1.29	140	180	2XPZ
	58	1.21	132	160	2XPZ
	62	1.14	132	150	2SPA
13:1	66	1.61	112	180	3SPZ
	70	1.52	132	200	3XPZ
	74	1.43	112	160	3XPZ
	78	1.36	118	160	3SPZ
	80	1.32	100	132	3XPA
	85	1.25	100	125	4XPZ
	90	1.18	106	125	4XPZ
	95	1.11	106	118	4XPZ
	100	1.06	132	140	3XPZ
5:1	101	2.86	140	400	3SPZ
	114	2.52	125	315	4SPZ
	121	2.39	132	315	3XPZ
	129	2.23	112	250	5XPA
	144	2.00	125	250	3SPA
	152	1.90	118	224	4SPA
	161	1.79	140	250	3SPA
	171	1.69	140	236	2QXPB
	183	1.58	200	315	3XPZ
	193	1.49	150	224	3SPA
	202	1.43	112	160	4XPA
	211	1.36	132	180	4SPA
	224	1.29	140	180	3XPA
	230	1.25	200	250	2XPA
	244	1.18	190	224	2XPB
	252	1.14	140	160	4SPA
	259	1.11	180	200	2XPB
	273	1.06	125	132	5SPA
	288	1.00	160	160	3XPA
	303	1.05	200	190	2XPB
	310	1.08	140	132	4XPA
	324	1.13	180	160	3XPA
	329	1.14	160	140	4XPA
	342	1.19	140	118	5XPA
	349	1.21	160	132	4XPA
	360	1.25	140	112	6XPA
	370	1.29	180	140	4XPA
	386	1.34	150	112	6XPA
	393	1.36	180	132	5XPA
	403	1.40	224	160	3XPA

UNIT SIZE F

	Nominal Output Speed	Puller Ratio	Pulley Pitch Dia.		Number of Belts
			Motor	Gearbox	
20:1	10	7.00	90	630*	1SPA
	12	5.97	67	400	2SPZ
	14	5.00	100	500*	1SPA
	16	4.44	90	400	2SPZ
	18	3.94	80	315	2SPZ
	20	3.57	112	400	1XPA
	22	3.20	125	400	1SPA
	24	2.94	85	250	3SPZ
	26	2.67	150	400	1SPA
	28	2.50	160	400	1SPA
	30	2.35	85	200	3XPZ
	32	2.22	90	200	3SPZ
	33	2.11	95	200	3SPZ
	37	1.88	85	160	4SPZ
	40	1.75	180	315	1XPA
	42	1.67	150	250	2SPA
	46	1.53	118	180	3SPZ
	48	1.47	95	140	4XPZ
	50	1.40	100	140	4SPZ
	52	1.36	118	160	3XPZ
	55	1.29	140	180	3SPZ
	63	1.12	112	125	4SPZ
	66	1.07	150	160	2XPA
13:1	70	1.52	132	200	4SPZ
	74	1.43	140	200	2XPB
	78	1.36	118	160	4SPA
	80	1.32	170	224	2SPB
	85	1.24	180	224	2SPA
	90	1.18	170	200	2SPB
	95	1.11	180	200	3SPZ
	100	1.06	132	140	5SPZ
5:1	102	2.81	160	450	2SPB
	109	2.63	190	500	2SPB
	121	2.39	132	315	5SPZ
	128	2.25	140	315	4SPA
	144	2.00	125	250	4SPA
	152	1.89	132	250	5XPZ
	161	1.79	140	250	5SPZ
	172	1.67	212	355	2SPB
	183	1.58	200	315	4SPZ
	193	1.49	150	224	4SPA
	202	1.43	140	200	4XPA
	212	1.36	140	190	4SPB
	224	1.29	140	180	4SPB
	231	1.24	180	224	3XPA
	243	1.19	236	280	2XPB
	252	1.14	140	160	5XPA
	259	1.11	180	200	3SPB
	272	1.06	236	250	2XPB
	288	1.00	315	315	2XPA
	303	1.05	200	190	3XPB
	309	1.07	150	140	5XPA
	323	1.12	224	200	3XPA
	329	1.14	160	140	5XPA
	342	1.19	280	236	2XPB
	358	1.24	236	190	3SPB
	365	1.27	355	280	2XPB
	384	1.33	315	236	2XPB
	405	1.41	315	224	3XPA

UNIT SIZE G

	Nominal Output Speed	Puller Ratio	Pulley Pitch Dia.		Number of Belts
			Motor	Gearbox	
20:1	10	7.00	90	630	2SPA
	12	5.94	106	630	2SPA
	14	5.00	100	500	2SPA
	16	4.44	90	400	3SPZ
	18	4.00	100	400	2XPA
	20	3.57	112	400	2SPA
	22	3.20	125	400	2SPA
	24	2.94	85	250	4XPZ
	26	2.67	118	315	3SPZ
	28	2.50	160	400	2XPZ
	30	2.36	106	250	3XPA
	32	2.23	112	250	3SPA
	34	2.10	150	315	2SPA
	38	1.87	150	280	2XPA
	40	1.75	160	280	2XPA
	42	1.67	150	250	3SPA
	46	1.52	132	200	4XPZ
	48	1.48	160	236	2XPB
	50	1.40	200	280	2XPA
	52	1.36	118	160	4XPA
	55	1.29	140	180	4SPA
	63	1.11	180	200	4XPZ
	66	1.07	150	160	4XPA
13:1	70	1.52	132	200	5SPA
	74	1.43	140	200	4SPA
	78	1.36	140	190	4SPB
	80	1.32	212	280	2SPB
	85	1.24	180	224	3SPB
	90	1.18	180	212	3XPB
	95	1.11	180	200	3XPB
	100	1.06	200	212	3XPB
5:1	102	2.81	160	450	4SPB
	109	2.63	190	500	3SPB
	122	2.37	190	450	3SPB
	130	2.22	160	355	4SPB
	144	2.00	200	400	5XPZ
	153	1.89	212	400	3SPB
	162	1.78	200	355	3XPB
	172	1.67	212	355	3SPB
	183	1.58	200	315	4SPA
	191	1.50	236	355	3XPB
	202	1.43	280	400	3XPA
	212	1.36	140	190	6XPB
	220	1.31	180	236	5SPB
	230	1.25	224	280	4XPA
	243	1.19	236	280	3XPB
	256	1.13	280	315	3XPB
	259	1.11	450	500	2XPB
	273	1.06	212	224	4XPB
	288	1.00	315	315	3XPA
	303	1.05	236	224	4XPB
	309	1.07	300	280	2QXPC
	323	1.12	224	200	4XPB
	326	1.13	300	265	3QXPC
	340	1.18	236	200	4XPB
	358	1.24	236	190	5SPB

* Pulley only available in 2 groove.
For 25:1 reduction SMSR belt drives consult your local Authorised Distributor

For installation and operation of belt drives,
see page 77 of this catalogue.

SMSR Gearboxes : Belt Drives

BELT DRIVES - 1440 REV/MIN MOTORS

UNIT SIZE H

	Nominal Output Speed	Puller Ratio	Pulley Pitch Dia.		Number of Belts
			Motor	Gearbox	
20:1	10	7.00	90	630	3SPA
	12	5.94	106	630	3SPA
	14	5.04	125	630	2SPA
	16	4.44	90	400	4SPZ
	18	4.00	100	400	3SPA
	20	3.57	140	500	2XPA
	22	3.20	125	400	2XPB
	24	2.97	106	315	4SPA
	26	2.67	150	400	2XPA
	28	2.50	160	400	2XPA
	30	2.35	170	400	2SPB
	32	2.23	112	250	4XPA
	34	2.10	150	315	3SPA
	38	1.85	170	315	2XPB
	40	1.75	160	280	3SPA
	42	1.67	150	250	4SPA
	46	1.52	132	200	5SPA
	48	1.48	160	236	3SPB
	50	1.40	200	280	3XPA
	52	1.36	118	160	6XPA
	55	1.29	140	180	5SPA
	60	1.18	180	212	3XPB
	63	1.12	200	224	3XPA
13:1	66	1.06	200	212	3XPB
	70	1.50	236	355	2XPB
	74	1.43	280	400	3XPA
	78	1.36	140	190	6SPB
	80	1.32	212	280	3SPB
	85	1.24	180	224	5SPA
	90	1.18	190	224	4SPB
	95	1.11	212	236	3XPB
	100	1.06	200	212	4XPB
5:1	101	2.81	224	630	3SPB
	108	2.63	190	500	4SPB
	120	2.37	190	450	4XPB
	128	2.23	224	500	4XPA
	143	2.00	200	400	5SPA
	151	1.89	212	400	4SPB
	160	1.79	224	400	5SPA
	172	1.66	190	315	5SPB
	180	1.58	224	355	4SPB
	190	1.50	236	355	4XPB
	200	1.43	280	400	3XPB
	213	1.34	224	300	4SPC
	218	1.31	180	236	6SPB
	228	1.25	224	280	6SPA
	240	1.19	236	280	5XPB
	253	1.13	315	355	3XPB
	257	1.11	450	500	3XPB
	269	1.06	236	250	5XPB
	285	1.00	280	280	4XPB
	301	1.05	236	224	6XPB
	306	1.07	300	280	3QXPC
	321	1.13	315	280	4XPB
	323	1.13	425	375	3QXPC
	339	1.19	280	236	5XPB

* Pulley only available in 2 groove.
For 25:1 reduction SMSR belt drives consult your local Authorised Distributor.

UNIT SIZE C

	Nominal Output Speed	Puller Ratio	Pulley Pitch Dia.		Number of Belts
			Motor	Gearbox	
20:1	10	7.00	90	630	4SPA
	12	5.94	106	630	3SPA
	14	5.00	100	500	4SPA
	16	4.50	140	630	2SPB
	18	3.94	160	630	2SPA
	20	3.57	140	500	3SPA
	22	3.20	125	400	4SPA
	24	2.95	190	560	2SPB
	26	2.67	150	400	3XPA
	28	2.50	160	400	3XPA
	30	2.36	212	500	2SPB
	32	2.22	180	400	3SPA
	34	2.10	150	315	4XPA
	38	1.87	190	355	3SPB
	40	1.75	180	315	4SPA
	42	1.66	190	315	3SPB
	46	1.50	200	300	3SPC
	50	1.41	224	315	3XPA
	52	1.33	236	315	3SPB
	54	1.31	180	236	4SPB
	58	1.21	140	170	6XPB
	62	1.13	315	355	2SPB
	67	1.06	212	224	4SPB
13:1	67	1.58	200	315	5SPA
	70	1.50	236	355	3SPB
	74	1.43	280	400	3XPA
	78	1.35	315	425	3SPC
	80	1.32	212	280	4SPB
	85	1.24	190	236	6SPB
	90	1.18	212	250	4XPB
	95	1.12	224	250	5XPA
	100	1.06	236	250	4SPB
5:1	100	2.86	280	800	3QXPB
	110	2.63	190	500	6SPB
	120	2.38	265	630	3SPC
	130	2.22	450	1000	2QXPB
	140	2.01	236	475	4SPC
	150	1.91	236	450	5SPB
	160	1.79	280	500	5SPA
	170	1.68	315	530	3SPC
	180	1.59	315	500	5SPA
	190	1.50	250	375	5SPC
	200	1.43	280	400	6SPA
	210	1.35	315	425	3SPC
	220	1.32	190	250	8XPB
	230	1.24	190	236	8XPB
	240	1.19	315	375	4SPC
	250	1.13	375	425	3SPC
	260	1.11	180	200	8QXPB
	270	1.06	212	224	8XPB
	290	1.00	400	400	5SPA
	300	1.05	236	224	8XPB
	310	1.07	300	280	5SPC
	320	1.12	265	236	6SPC
	330	1.18	212	180	8XPB
	340	1.19	315	265	4SPC
	350	1.24	236	190	8SPB
	360	1.26	315	250	6SPA
	370	1.31	236	180	8SPB
	380	1.33	315	236	5SPB
	390	1.39	250	180	6XPB
	400	1.41	315	224	6XPA

UNIT SIZE D

	Nominal Output Speed	Puller Ratio	Pulley Pitch Dia.		Number of Belts
			Motor	Gearbox	
20:1	10	7.14	112	800	3XPB
	12	5.94	106	630	4SPA
	14	5.00	160	800	3SPB
	16	4.50	140	630	3SPA
	18	3.94	160	630	3SPA
	20	3.57	140	500	3XPB
	22	3.20	125	400	5SPA
	24	2.97	212	630	2SPB
	26	2.67	150	400	4XPA
	28	2.50	160	400	4SPB
	30	2.36	212	500	3SPB
	32	2.22	180	400	4SPA
	34	2.09	170	355	5SPB
	38	1.87	190	355	4SPB
	40	1.75	180	315	5SPA
	42	1.67	212	355	4SPB
	46	1.50	236	355	3SPC
	50	1.41	224	315	4XPA
	52	1.32	212	280	4XPB
	54	1.31	180	236	5XPB
	58	1.20	250	300	3SPC
	63	1.13	265	300	3SPC
	67	1.06	212	224	5SPB
13:1	67	1.58	200	315	5SPB
	70	1.50	236	355	4XPB
	74	1.43	280	400	5XPA
	78	1.35	315	425	3SPC
	80	1.32	212	280	5XPB
	85	1.24	190	236	8SPB
	90	1.19	236	280	5SPB
	95	1.12	250	280	6XPA
	100	1.06	236	250	5XPB
5:1	100	2.86	280	800	5SPB
	110	2.63	190	500	8SPB
	120	2.38	265	630	4SPC
	130	2.22	450	1000	3SPB
	140	2.01	236	475	4QXPC
	150	1.91	236	450	6XPB
	160	1.79	280	500	6SPB
	170	1.68	375	630	3SPC
	180	1.59	315	500	5SPB
	190	1.50	300	450	5SPC
	200	1.43	280	400	6XPB
	210	1.35	315	425	5SPC
	220	1.32	425	560	3SPC
	230	1.25	425	530	3SPC
	240	1.19	315	375	5SPC
	250	1.13	375	425	4SPC
	260	1.11	450	500	4QXPB
	270	1.06	265	280	8SPC
	290	1.00	355	355	6XPB
	300	1.06	375	355	4QXPC
	310	1.07	400	375	4SPC
	320	1.12	375	335	5SPC
	330	1.18	500	425	3QXPC
	340	1.19	375	315	5SPC
	350	1.24	236	190	8QXPB
	360	1.26	315	250	6SPC
	370	1.31	236	180	8QXPB
	380	1.33	315	236	6XPB
	390	1.35	425	315	3QXPC
	400	1.40	280	200	8SPB

For installation and operation of belt drives, see page 77 of this catalogue.

SMSR Gearboxes : Belt Drives

BELT DRIVES - 1440 REV/MIN MOTORS

UNIT SIZE T

	Nominal Output Speed	Puller Ratio	Pulley Pitch Dia.		Number of Belts
			Motor	Gearbox	
20:1	10	7.14	140	1000	3SPB
	12	5.71	140	800	3SPB
	14	5.04	125	630	4SPA
	16	4.50	140	630	4SPA
	18	3.94	160	630	3SPB
	20	3.50	180	630	3SPB
	22	3.15	200	630	4SPA
	24	2.97	212	630	3SPB
	26	2.67	236	630	3SPB
	28	2.50	200	500	3XPB
	30	2.36	212	500	3XPB
	32	2.22	180	400	5XPA
	34	2.09	170	355	6SPB
	38	1.87	190	355	5SPB
	40	1.79	224	400	5SPA
	42	1.67	212	355	4XPB
	46	1.52	280	425	3SPC
	50	1.41	224	315	6SPA
	52	1.33	236	315	5XPB
	54	1.31	180	236	6QXPB
	58	1.24	190	236	6XPB
	63	1.13	265	300	4SPC
	67	1.06	236	250	5XPB
13:1	67	1.58	200	315	6XPB
	70	1.50	236	355	5XPB
	74	1.43	280	400	6XPA
	78	1.35	315	425	3QXPC
	80	1.32	425	560	3SPC
	84	1.25	400	500	5SPA
	90	1.18	425	500	3SPC
	95	1.11	212	236	8XPB
	100	1.06	355	375	3SPC
5:1	100	3.11	180	560	8QXPB
	110	2.81	224	630	8SPB
	120	2.54	315	800	5QXPB
	130	2.37	236	560	8SPB
	140	2.22	450	1000	4QXPB
	150	2.01	236	475	5QXPC
	160	1.91	236	450	8QXPB
	170	1.78	450	800	5SPB
	180	1.68	375	630	4SPC
	190	1.61	280	450	8SPB
	200	1.51	315	475	4QXPC
	210	1.48	425	630	4SPC
	220	1.42	335	475	5SPC
	230	1.33	375	500	5SPC
	240	1.27	315	400	8SPB
	250	1.24	450	560	5QXPB
	260	1.18	475	560	3QXPC
	270	1.13	375	425	5SPC
	280	1.11	450	500	3QXPC
	290	1.06	335	355	6SPC
	310	1.00	355	355	6XPB
	320	1.05	315	300	6SPC
	330	1.07	400	375	4SPC
	340	1.11	500	450	4QXPB
	350	1.13	425	375	3QXPC
	360	1.18	250	212	8QXPB
	370	1.20	450	375	3QXPC
	380	1.24	236	190	8QXPB
	390	1.27	355	280	6XPB
	400	1.32	250	190	8QXPB

* Pulley only available in 2 groove.
For 25:1 reduction SMSR belt drives consult your local Authorised Distributor.

UNIT SIZE K

	Nominal Output Speed	Puller Ratio	Pulley Pitch Dia.		Number of Belts
			Motor	Gearbox	
20:1	10	7.14	140	1000	4SPB
	12	6.06	132	800	4XPB
	14	5.00	160	800	3SPB
	16	4.44	180	800	3SPB
	18	3.94	160	630	4SPB
	20	3.57	224	800	3SPB
	22	3.29	170	560	4SPB
	24	2.94	170	500	4XPB
	26	2.81	224	630	3SPB
	28	2.52	250	630	3SPB
	30	2.36	212	500	4SPB
	32	2.23	224	500	5SPA
	34	2.12	236	500	4SPB
	38	1.89	212	400	5SPB
	40	1.79	224	400	6SPA
	42	1.69	236	400	4XPB
	46	1.58	300	475	3SPC
	50	1.50	250	375	4SPC
	52	1.40	400	560	3SPB
	54	1.33	236	315	5XPB
	58	1.25	400	500	3SPB
13:1	62	1.75	180	315	8SPB
	65	1.67	300	500	4SPC
	70	1.56	180	280	8QXPB
	74	1.47	190	280	8SPB
	78	1.40	400	560	4SPB
	80	1.35	315	425	4SPC
	85	1.27	236	300	6SPC
	90	1.20	250	300	5SPC
	95	1.13	265	300	4SPC
	100	1.07	280	300	4SPC

UNIT SIZE M

	Nominal Output Speed	Puller Ratio	Pulley Pitch Dia.		Number of Belts
			Motor	Gearbox	
20:1	10	7.14	140	1000	6QXPB
	12	6.25	200	1250	5SPC
	14	5.30	236	1250	4SPC
	16	4.72	212	1000	6SPB
	18	4.24	236	1000	6SPB
	20	3.77	265	1000	4SPC
	22	3.39	236	800	6SPC
	24	3.17	315	1000	5SPB
	26	2.86	280	800	6SPB
	28	2.54	315	800	6SPB
	30	2.52	250	630	6SPC
	32	2.35	425	1000	3SPC
	34	2.25	280	630	4QXPC
	38	2.00	315	630	5SPC
	40	1.88	335	630	5SPC
	42	1.78	450	800	5SPB
	46	1.60	500	800	5SPB
	50	1.49	335	500	6SPC
	52	1.42	335	475	6SPC
13:1	54	2.11	475	1000	4SPC
	58	1.91	250	475	8QXPC
	62	1.79	265	475	8QXPC
	65	1.68	475	800	5SPC
	70	1.60	500	800	5SPC
	74	1.51	530	800	4QXPC
	78	1.42	335	475	8SPC
	80	1.40	400	560	8SPB
	85	1.27	355	450	8SPB
	90	1.24	450	560	4SPC
	95	1.18	475	560	4SPC
	100	1.12	500	560	5SPB

UNIT SIZE L

	Nominal Output Speed	Puller Ratio	Pulley Pitch Dia.		Number of Belts
			Motor	Gearbox	
20:1	10	7.14	140	1000	5SPB
	12	6.25	160	1000	4SPB
	14	5.26	190	1000	4SPB
	16	4.46	224	1000	3SPB
	18	4.00	200	800	4SPB
	20	3.77	212	800	4SPB
	22	3.32	190	630	5SPB
	24	3.02	265	800	3SPC
	26	2.81	224	630	6SPA
	28	2.64	212	560	5SPB
	30	2.50	224	560	5SPB
	32	2.25	355	800	3SPB
	34	2.13	375	800	3SPC
	38	1.91	236	450	5SPC
	40	1.87	300	560	4SPC
	42	1.77	300	530	4SPC
	46	1.60	250	400	6SPB
	50	1.48	425	630	3SPC
	52	1.42	265	375	4QXPC
	54	1.35	315	425	4SPC
13:1	58	1.87	300	560	5SPC
	62	1.77	300	530	5SPC
	65	1.67	300	500	5SPC
	70	1.58	400	630	5SPB
	74	1.48	425	630	3QXPC
	78	1.40	450	630	5SPB
	80	1.35	315	425	5SPC
	85	1.27	315	400	6SPB
	90	1.20	250	300	6SPC
	95	1.13	375	425	3SPC
	100	1.07	280	300	5SPC

For installation and operation of belt drives, see page 77 of this catalogue.

SMSR Gearboxes : Installation

GEARBOX INSTALLATION

Satisfactory performance depends on proper installation, lubrication and maintenance. Therefore it is important that the instructions in the Installation and Maintenance leaflet, supplied with each gearbox, are followed carefully. Some of the important aspects of belt and torque-arm installation are listed below.

1: Install pulley on gearbox input shaft as close to the reducer as possible. See fig. 1. Failure to do this will cause excess loads in the input shaft bearings and could cause their premature failure.

2: Install motor and wedge belt drive with the belt pull at approximately 90o to the centre line between driven and input shafts. See fig. 2. This will permit tensioning of the wedge belt drive with the torque-arm which should preferably be in tension. If output hub runs anti-clockwise the torque arm should be positioned to the right. See fig. 3.

3: Install torque-arm fulcrum on a rigid support so that the torque-arm will be at approximately right angles to the centre line through the driven shaft and the torque arm case bolt. See fig. 4. Make sure there is sufficient take up in the turn-buckle for belt tension adjustment.

FIG 1

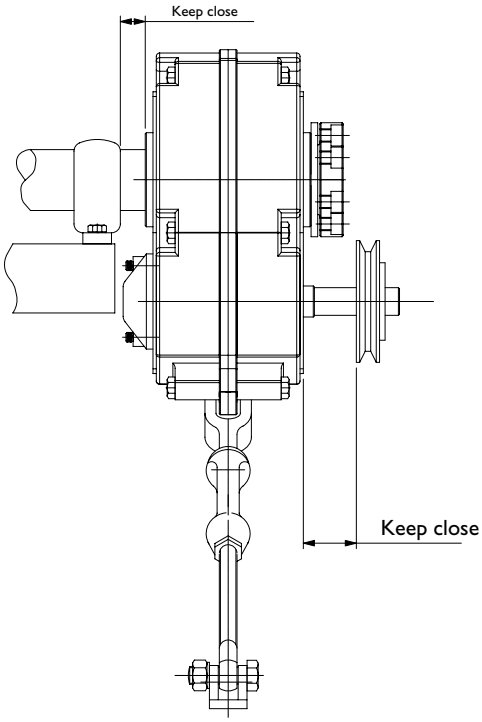

FIG 2

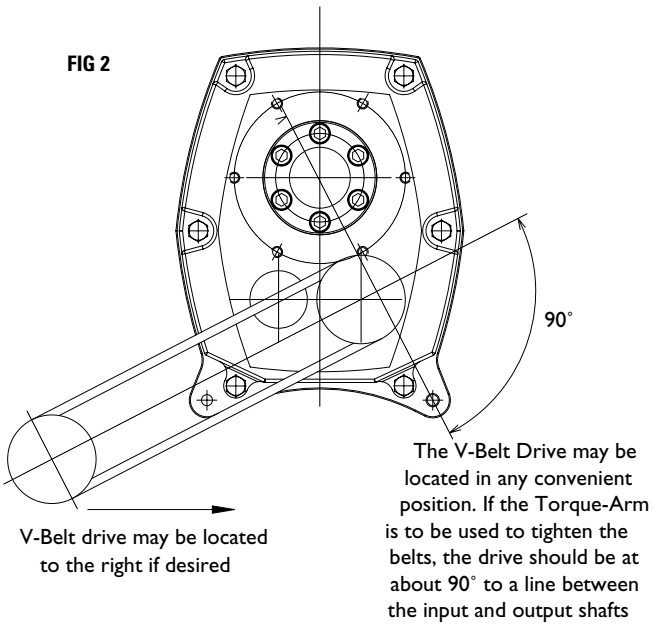

FIG 3

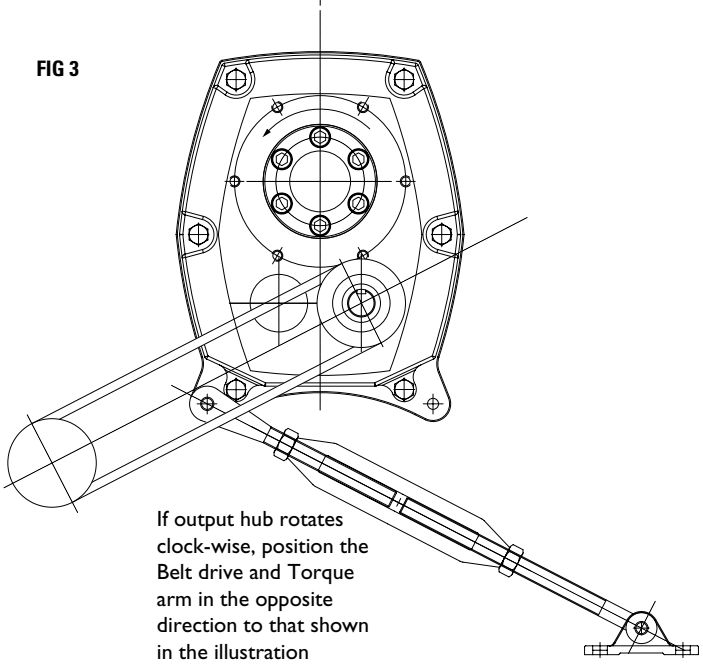

FIG 4

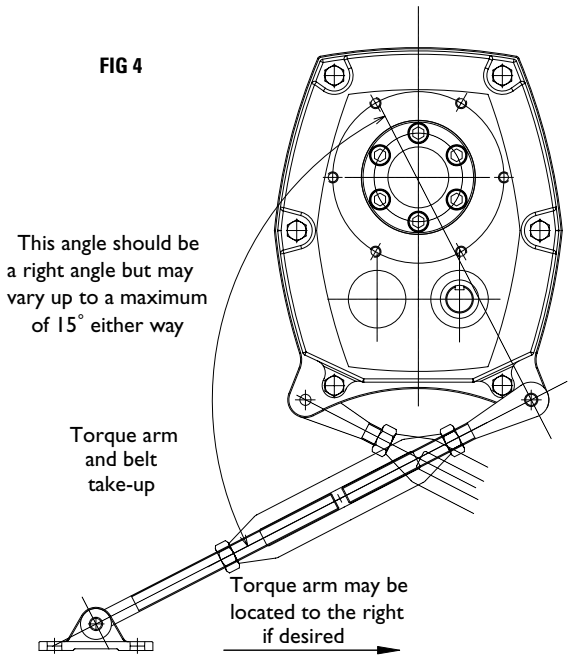

For installation and operation of belt drives, see page 77 of this catalogue.

SMSR Gearboxes : Parts identification

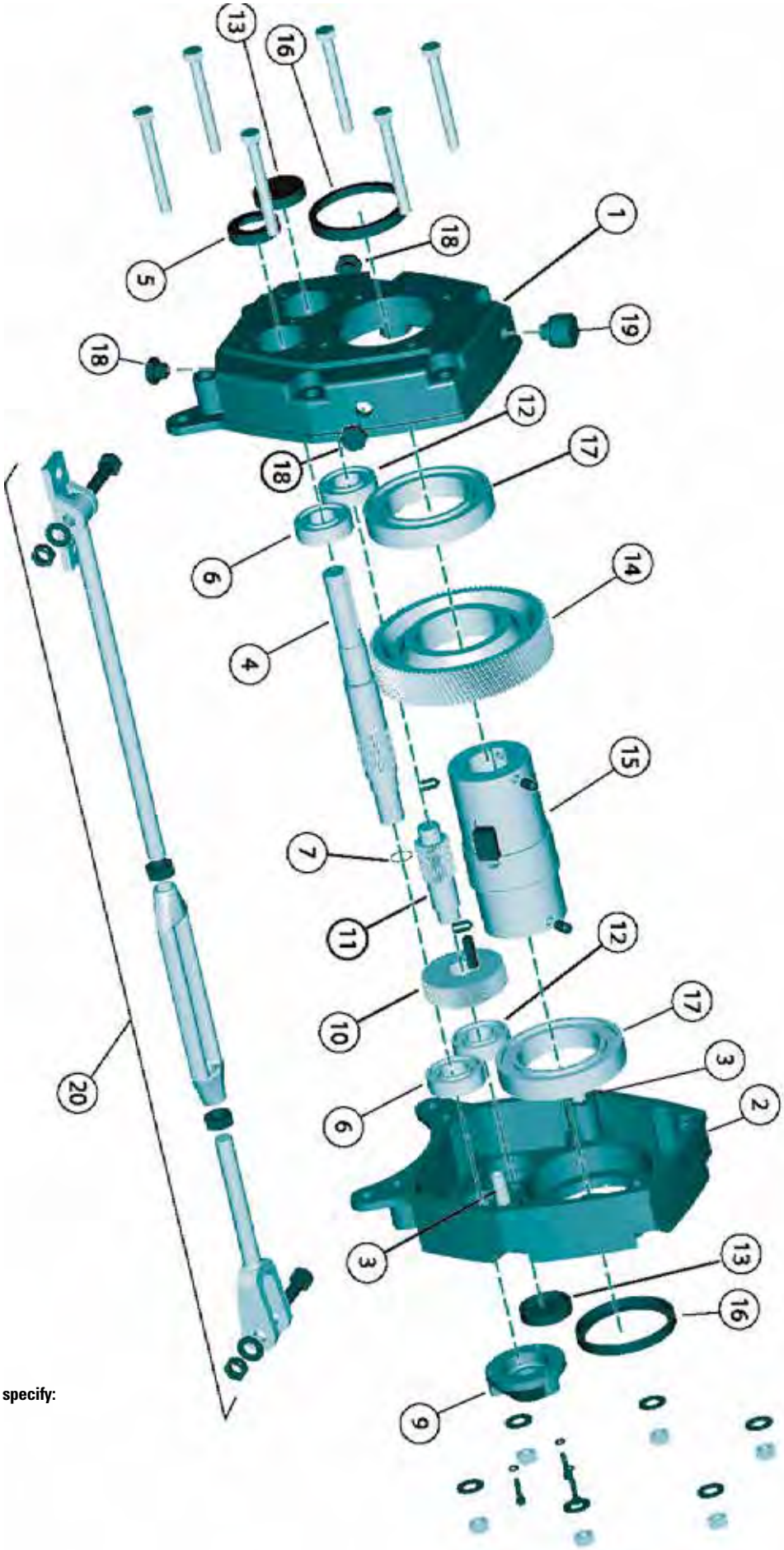

When ordering parts for reducer, please specify:

- Reducer Size
- Reducer Serial No.
- Part Name
- Code number
- Quantity required

SMSR Gearboxes : Spare parts - Code numbers

REPLACEMENT PARTS CODE LIST

Part No.	Description	No. Req'd	Unit Size									
			B	C	D	E	F	G	H	J	S	T
1	Case IPS	1	116B6001	116C6001	116D6001	116E6001	116F6001	116G6001	116H6001	116J6001	116S6001	116T6001
2	Case BSS	1	116B6002	116C6002	116D6002	116E6002	116F6002	116G6002	116H6002	116J6002	116S6002	116T6002
3	Hollow dowel	2	016A7004	016A7004	016C7004	016C7004	016E7004	016F7004	016F7004	016H7004	016H7004	016K7004
4	Input shaft 5:1	1	116B6005	116C6005	116D6005	116E6005	116F6005	116G6005	116H6005	116J6005	116S6005	116T6005
	Input shaft 13:1		116B6013	116C6013	116D6013	116E6013	116F6013	116G6013	116H6013	116J6013	116S6013	116T6013
	Input shaft 20:1		116B6020	116C6020	116D6020	116E6020	116F6020	116G6020	116H6020	116J6020	116S6020	116T6020
	Input shaft 25:1		116B6025	116C6025	116D6025	116E6025	116F6025	116G6025	116H6025	116J6025	116S6025	116T6025
5	Input shaft oilseal	1	G946040	G946030	G946031	G946032	G946033	G946034	G946035	G946036	G946037	G946038
6	Input shaft bearing	2	G941000	G941801	G941802	G941803	G941804	G941805	G941806	G941807	G941808	G941809
7	Input shaft retaining ring (20:1)	1	116X4180	116X4180	116X4181	116X4196	-	-	116X4184	116X4185	116X4186	-
	Input shaft retaining ring (25:1)	1	-	116X4180	-	-	116X4196	116X4182	116H6004	116J6004	116S6004	116X4188
9	Backstop cover	1	116B6600	116C6600	116D6600	116E6600	116F6600	116G6600	116H6600	116J6600	116S6600	116T6600
10	1st. Reduction 13:1	1	116B6113	116C6113	116D6113	116E6113	116F6113	116G6113	116H6113	116J6113	116S6113	116T6113
	1st. Reduction Gear 20:1	1	116B6120	116C6120	116D6120	116E6120	116F6120	116G6120	116H6120	116J6120	116S6120	116T6120
	1st. Reduction Gear 25:1	1	116B6125	116C6125	116D6125	116E6125	116F6125	116G6125	116H6125	116J6125	116S6125	116T6125
11	Intermediate pinion	1	116B6205	116C6205	116D6205	116E6205	116F6205	116G6205	116H6205	116J6205	116S6205	116T6205
12	Intermediate bearing	2	G941000	G941801	G941802	G941803	G941804	G941805	G941806	G941807	G941808	G941809
13	Intermediate cover	2	016A7025	016B7025	016C7025	016E7025	016E7025	016F7025	116H6285	116J6285	016J7025	016T7025
14	2nd. Reduction gear	1	116B6305	116C6305	116D6305	116E6305	116F6305	116G6305	116H6305	116J6305	116S6305	116T6305
15	Output hub (Standard Bore)	1	116B6030	116C6040	116D6050	116E6055	116F6065	116G6075	116H6085	116J6100	116S7120	116T6225
	Output hub (Upper Alt Bore)		116B6040	116C6050	116D6055	116E6065	116F6075	116G6085	116H6100	116J7120	116S6225	116T6135
	Output hub (Lower Alt Bore)		-	116C6030	116D6040	116E6050	116F6055	116G6065	116H6075	116J6085	116S6100	116T7120
	Output hub (Taper Grip)		116B6000	116C6000	116D6000	116E6000	116F6000	116G6000	116H6000	116J6000	116S6000	116T6000
16	Output hub oilseal	2	G946041	G946023	G946024	G946025	G946026	G946016	G946027	G946028	G946029	G946315
17	Output hub Bearing	2	G941350	G941351	G941352	G941353	G941354	G941355	G941356	G941357	G941358	G941050
18	Pipe plug	3	016X2395	016X2395	016X2395	016X2395	016X2392	016X2392	016X2392	016X2392	016X2392	016X2392
19	Breather plug	1	016X6097	016X6097	016X6097	016X6097	016X6098	016X6098	016X6098	016X6098	016X6098	016X6098
20	Torque arm assembly	1	116C0101	116C0101	116E0101	116E0101	116G0101	116G0101	116T0101	116T0101	116T0101	116T0101

SMSR Gearboxes : Lubrication

LUBRICATION – QUANTITIES & RECOMMENDED GRADES

Fenner Power Plus Shaft Mounted Speed Reducers are dispatched without oil. Before running they should be filled with an appropriate amount of lubricant as shown in the tables, dependent on the mounting position. Fill to level plug when reducer is not running. Drain, flush and refill as directed in the installtion leaflet supplied with every gearbox, check oil level regularly.

Positions of filler, breather and drain plug for different mounting positions are shown in fig. 1.
CAUTION. Too much oil will cause over-heating. Too little oil will cause gear and bearing failure.

Normal operating positions are shown in fig 1. Note that the reducer is supplied with four plugs. After the reducer has been mounted in its running position the plugs must be located as shown in fig 1 for the appropriate mounting position.

If the reducer is not within 20 degrees of one of the positions shown, the oil level plug cannot be safely used to check the oil level. This can be overcome by disconnecting the torque-arm and swinging the reducer around to one of the positions shown. Because of the many positions of fitting the reducer it may be necessary or desirable to make special adaptions using the plug holes in the reducer with standard pipe fittings standpipes or oil level gauges, consult your local Authorised Distributor.

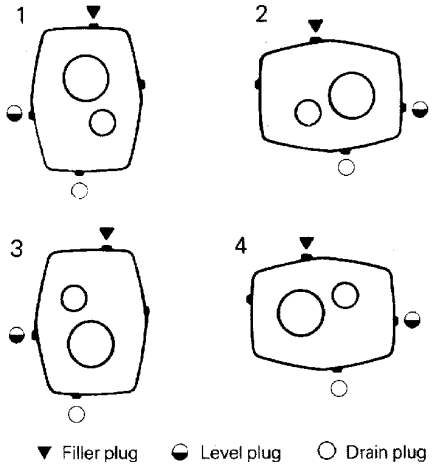

Units are supplied with filler, level and drain plugs for fitting in the position shown.

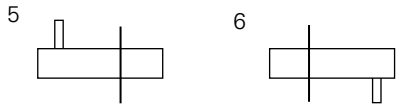

MOTOR OPTIONS AVAILABLE (using 4 pole motors)

Unit Size	Approximate Capacity - Litres							
	5:1				13:1, 20:1 and 25:1			
Mounting Position	1	2	3	4	5	6	7	8
B	0.3	0.3	0.3	0.4	0.25	0.4	0.3	0.4
C	0.5	0.5	0.5	0.6	0.4	0.6	0.5	0.6
D	0.8	0.9	0.8	1.0	0.7	0.9	0.8	0.9
E	1.2	1.7	1.4	1.8	1.0	1.8	1.4	1.6
F	2.5	2.6	2.4	2.5	2.3	2.6	2.4	2.2
G	3.3	3.2	3.2	3.3	3.0	3.2	3.2	3.2
H	4.1	5.3	4.1	5.8	3.8	5.5	4.2	5.1
J	5.7	8.6	5.9	8.6	5.4	8.5	5.9	8.3
S	10.9	18.4	13.6	18.4	9.1	16.4	12.6	15.4
T	15.2	21.7	25.2	20.7	12.7	21.7	15.7	19.2
K					12.5	13.5	24.0	11.5
L					22.5	34.0	52.0	27.0
M					36.0	50.0	79.0	45.0

MINERAL OIL

	Ambient Temp ºC	5:1 Ratio Gearbox				13:1 and 20 and 25:1 Ratio Gearboxes						
		0-100 rev/min	101-200 rev/min	201-400 rev/min		0-20 rev/min	21-50 rev/min		51-120 rev/min		0 to 50 rev/min	51 to 80 rev/min
		BCDEFGHJST	BCDEFGHJST	BCD	EFGHJST	BCDEFGHJST	BCDE	FGHJST	BCDE	FGHJST	KLM	
ISO Viscosity Grade	–10 to +5	100	100	100	68	150	150	150	100	100	100	100
	6 to 25	460	320	320	220	680	680	460	460	320	320	220
	26 to 40	800	680	680	460	800	800	800	680	460	460	320

MANUFACTURERS AND TYPES

B.P. ENERGOL GR–XP	CASTROL ALPHA ZN OR SP	MOBIL MOBILGEAR & SHC	SHELL OMALA	TEXACO MEROPA

NOTE: Do not use E.P. mineral oils other than those recommended when using a backstop.

Spiral T Gearboxes : Spiral T Gear Units

These compact right angle gearboxes excel because of their high efficiency and universal mounting facilities.

By the utilisation of spiral bevel gears within the lightweight alloy casing, low noise emission is assured throughout the speed band.

All units are factory filled with longlife synthetic lubricant, thus eliminating regular maintenance requirements. The two smaller sizes in the range are lubricated for life.

All shafts are manufactured from high quality steel and ground to B.S. 4500:1969, j6 limits.

Keyways are in accordance with B.S. 4235 Part 1: 1972

SELECTION PROCEDURE

(a)Service Factor
From Table 1 select the service factor applicable to the drive.

(b)Design Power
Multiply the power or output torque by the service factor to obtain the Design Power or Design Torque.

(c)Gear Ratio
Determine the Gear Ratio and whether it is speed reducing or increasing.

(d) Unit Selection
Refer to the power ratings (Table 2 overleaf) and from the required ratio, trace to the right along the input speed line until a power or torque in excess of the figure determined in step (b) is found. At the head of the column, note the size of unit required.

N.B. For input speeds between those listed, it is sufficiently accurate to interpolate. For speeds below 100 rev/min, assume a constant torque output capacity.

(e)Rotation
Note the required rotation shown opposite.

OVERLOADS

Bevel geared units are designed to withstand momentary overloads of 100%.

OVERHUNG LOADS

For permissible overhung loads for each application consult your local Authorised Distributor.

RECOMMENDED LUBRICANTS

CASTROL	Spherol FG00 EP
TEXACO	Marfak 0

QUANTITIES

Size	A	B	C	D
Kg	–	–	0.11	0.18

TABLE 1 – SERVICE FACTORS

Driven Machines Characteristics	Hours Per Day Duty		
	Under 3	3 to 12	Over 12
Uniform Loads	0.8	1.0	1.25
Moderate Shock Loads	1.0	1.25	1.5
Heavy Shock Loads	1.5	1.75	2.0

ORDERING INSTRUCTIONS

Unit code number derived as follows:

920	A	2	100
1	2	3	4

1. Product prefix is constant at 920
2. Unit size – see selection procedure
3. Rotation – see opposite
4. Gear Ratio – see Table 2

The above code would designate an A size unit rotation 2 with 1 : 1 gear ratio.

RATIOS AND ROTATIONS

Input Shaft	Available Ratios	
S	1 : 1	1 : 2
T	1 : 1	2 : 1

When used for speed increase SHAFT 'S' must be the input or drive shaft.

SPEED REDUCING DUTY

When used for speed reducing SHAFT 'T' must be the input or drive shaft.

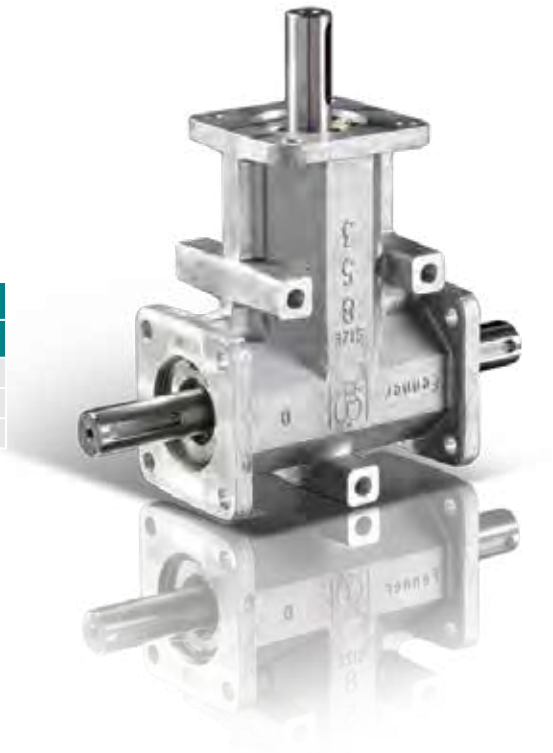

For installation and operation of belt drives, see page 74 of this catalogue.

Spiral T Gearboxes : Spiral T Gear Units

TABLE 2 – POWER RATINGS

Ratio	Input Speed rev/min	Output Speed rev/min	Power kW				Output Torque Nm			
			A	B	C	D	A	B	C	D
2 : 1 Gear Code ...200	100	50	0.01	0.06	0.17	0.36	2.48	10.20	31.9	65.7
	350	175	0.04	0.16	0.51	1.08	1.93	8.41	26.8	57.0
	750	375	0.07	0.31	0.96	1.92	1.82	7.72	23.5	48.3
	1000	500	0.09	0.37	1.19	2.45	1.74	6.89	22.0	45.1
	1200	600	0.11	0.44	1.45	2.82	1.71	6.71	21.9	43.4
	1500	750	0.13	0.53	1.72	3.25	1.60	6.54	21.2	40.0
	1800	900	0.15	0.60	1.95	3.87	1.52	6.21	20.0	39.7
1 : 1 Gear Code ...100	100	100	0.04	0.14	0.40	0.84	3.92	12.50	37.2	77.9
	350	350	0.12	0.37	1.15	2.35	2.95	9.65	30.2	62.1
	750	750	0.22	0.73	2.07	4.36	2.73	8.98	25.5	53.5
	1000	1000	0.28	0.93	2.60	5.45	2.55	8.53	23.9	50.3
	1200	1200	0.32	1.08	3.06	6.46	2.46	8.30	23.4	49.6
	1500	1500	0.38	1.28	3.66	7.61	2.35	7.83	22.5	46.8
	1800	1800	0.44	1.46	4.10	8.64	2.27	7.50	21.1	44.2
1 : 2 Gear Code ...200	100	200	0.02	0.10	0.32	0.59	1.11	4.65	14.9	27.2
	350	700	0.07	0.28	0.90	1.82	0.91	3.76	11.8	23.9
	750	1500	0.13	0.53	1.66	3.36	0.80	3.28	10.2	20.6
	900	1800	0.15	0.61	1.92	3.41	0.80	3.24	10.2	20.7

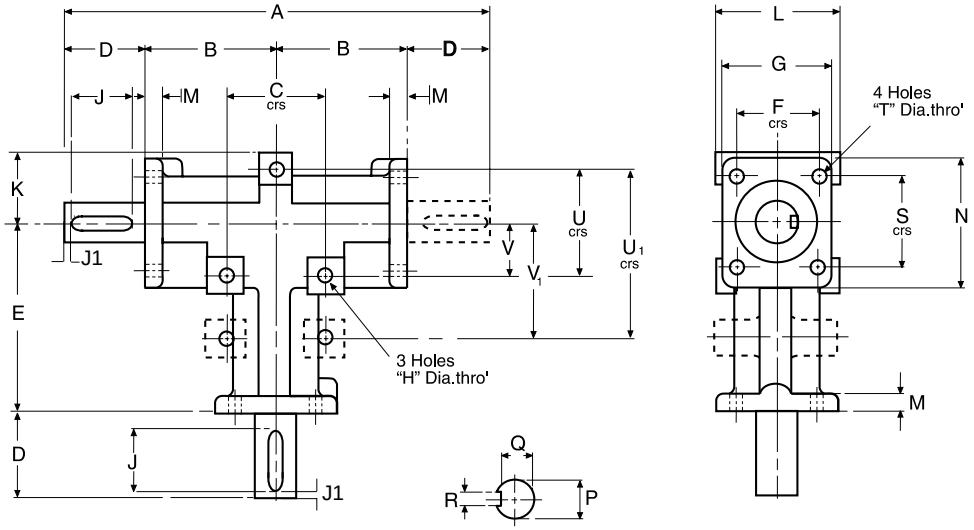

DIMENSIONS

Unit Size	Case Size	A	B	C	D	E	F	G	H	J	J1	K	L	M	N	P	Q	R	S	T	U	U_1	V	V_1	Approx. Mass kg
A	303	110	35.3	33.4	20	55.0	22.3	31	5.5	–	-	22	32	5	39	9j6	–	–	30.1	5	33.4	–	16.7	–	0.4
B	503	188	54.0	47.5	40	82.5	35.0	49	7	32	4	30	51	6	62	16j6	13	5	47.5	7	47.5	–	23.75	–	1.8
C	703	232	76.3	76.0	40	127.0	57.2	75	9	32	4	47	76	8	95	19j6	15.5	6	76.0	9	76.0	–	38	–	3.6
D	853	285	82.5	89.0	60	152.5	76.0	98	11	45	5	55.1	102	13	102	25j6	21	8	76.0	11	–	114.5	–	70	6.3

*Figures given are for 1 : 1 ratio units having one input and one output shaft. All dimensions in millimetres

Rotation 1
(code - - - - 1 - - -)

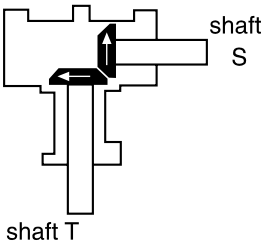

Rotation 2
(code - - - - 2 - - -)

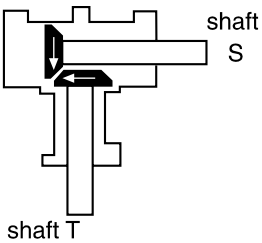

Rotation 3
(code - - - - 3 - - -)

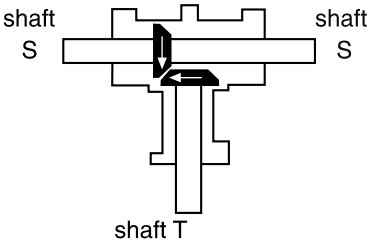

Authorised Distributors:

ERIKS

Belgium

ERIKS Power Transmission
Technology Centre Moorsele / CET MOTOREN
Muizelstraat 8
8560 Gullegem Moorsele
Belgium
Tel: +32 (0) 56 41 47 65
Fax: +32 (0) 56 40 34 60
Email: mgd@eriks.be

ERIKS Technology Centre Mol
Nijverheidsstraat 13, Industrieterrein II
B-2400 Mol
Belgium
Tel: +32 (0) 14 34 64 84
Fax: +32 (0) 14 31 58 15
Email: powertransmissions@eriks.be

Germany

ERIKS Deutschland GmbH
Business Unit Wälzlager / Mechanische Antriebstechnik
Robert-Hesse-Str. 11
D-30827 Garbsen
Germany
Tel: +49 (0)511 27998-507
Email: antriebstechnik@eriks.de

Netherlands

ERIKS bv
Aandrijftechniek Roermond
Albert Einsteinweg 8
6045 GX Roermond
Postbus 1268
6040 KG Roermond
Tel: (0475) 37 22 33
Fax: (0475) 32 75 40
Email: info.roermond@eriks.nl
www.eriks.nl

Switzerland

Maagtechnic AG
Sonnentalstrasse 8
8600 Dübendorf
Schweiz
Tel: +41 848 111 333
Fax: +41 848 111 334
Email: info-ch@maagtechnic.com

UK & Ireland

ERIKS UK & Ireland
Seven Star Road
Oldbury
West Midlands
B69 4 JR
Tel: +44 (0)121 508 6000
Email: enquiries@eriks.co.uk

Fenner, Fenaflex, Fenner Power Plus, Fenner Torque Drive Plus, PowerTwist, FenLock and Trantorque are registered trade marks of J. H. Fenner & Co. Taper Lock, Power Plus, PB, and Bi-Loc are registered trade marks of ERIKS Industrial Services